# Data Sheet | Item Number: 750-454

2-channel analog input; 4 … 20 mA; Differential input

https://www.wago.com/750-454

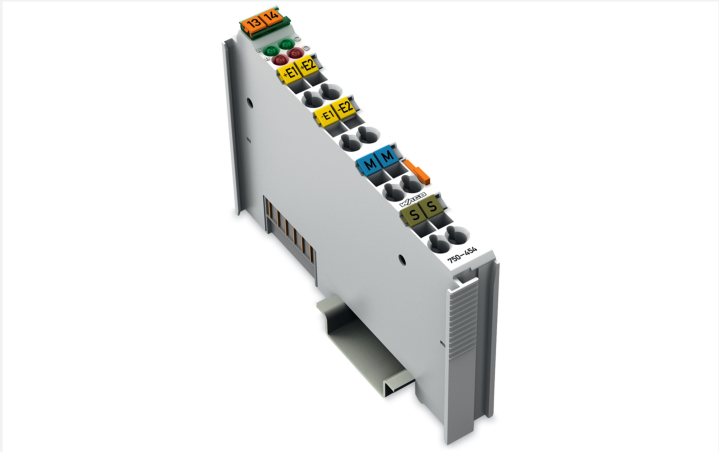

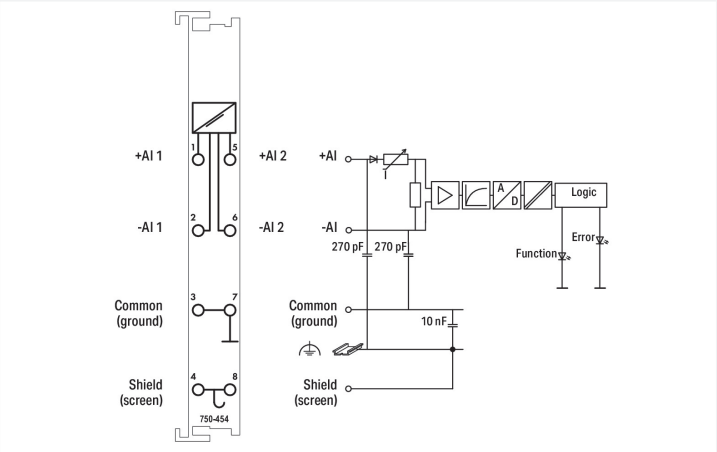


Color: light gray

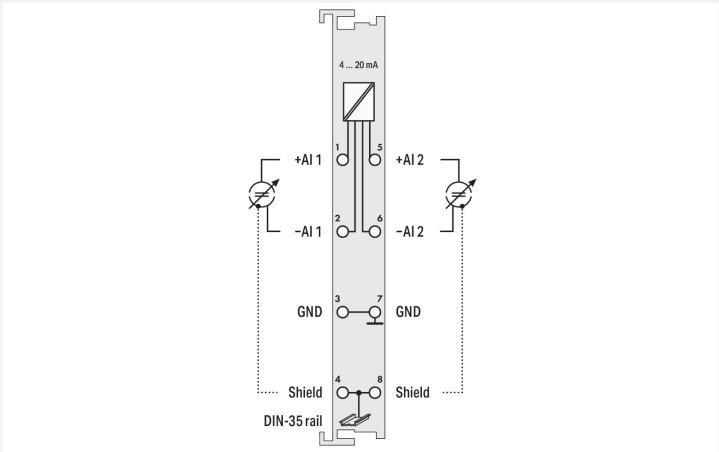


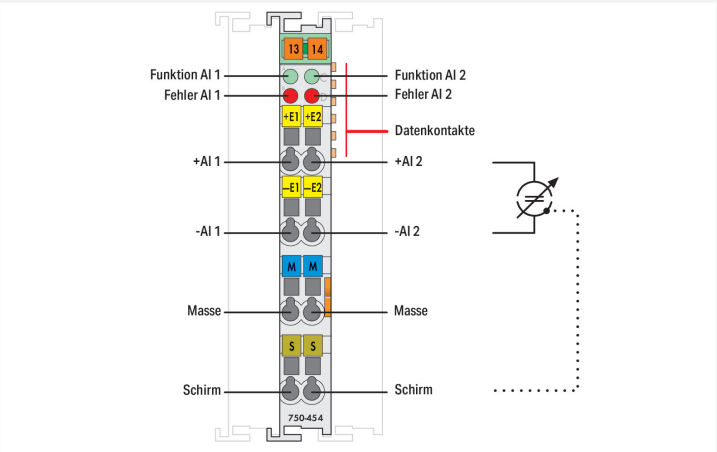


This analog input module processes standard 4–20 mA signals.
The input signal is electrically isolated and is transmitted with a resolution of 12 bits.
The internal system supply powers the module.
The input channels of the module are differential inputs.
The shield directly connects to the DIN-rail.

| Technical data | |
|---|---|
| Number of analog inputs | 2 |
| Total number of channels (module) | 2 |
| Signal type | Current |
| Signal type (current) | 4 … 20 mADC |
| Sensor connection | 2 x (2-wire) |
| Input voltage (max.) | 35 V |
| Signal characteristics | Differential |
| Resolution [bit] | 12 bits |
| Input resistance (max.) | 220 Ω |
| Data width | 2 x 16-bit data; 2 x 8-bit control/status (optional) |
| Conversion time (typ.) | 2 ms |
| Measurement error (reference temperature) | 25 °C |
| Measurement error, deviation (max.) from the upper-range value | 0.2 % |
| Temperature error (max.) of the upper-range value | 0.01 %/K |
| Supply voltage (system) | 5 VDC; via data contacts |
| Current consumption (5 V system supply) | 70 mA |
| Isolation | 500 V system/field |
| Indicators | LED (A, C) green: Function AI 1, AI 2; LED (B, D) red: Error AI 1, AI 2 |



Downloaded from Arrow.com.

## Connection data

| | |
|---|---|
| Connection technology: inputs/outputs | 8 x CAGE CLAMP® |
| Connectable conductor materials | Copper |
| Connection type 1 | Inputs/outputs |
| Solid conductor | 0.08 … 2.5 mm² / 28 … 14 AWG |
| Fine-stranded conductor | 0.08 … 2.5 mm² / 28 … 14 AWG |
| Strip length | 8 … 9 mm / 0.31 … 0.35 inches |

## Physical data

| | |
|---|---|
| Width | 12 mm / 0.472 inches |
| Height | 100 mm / 3.937 inches |
| Depth | 69.8 mm / 2.748 inches |
| Depth from upper-edge of DIN-rail | 62.6 mm / 2.465 inches |

## Mechanical data

| | |
|---|---|
| Mounting type | DIN-35 rail |

## Material data

| | |
|---|---|
| Color | light gray |
| Housing material | Polycarbonate; polyamide 6.6 |
| Fire load | 1.034 MJ |
| Weight | 49.8 g |
| Conformity marking | CE |

## Environmental requirements

| | |
|---|---|
| Ambient temperature (operation) | 0 … +55 °C |
| Ambient temperature (storage) | -40 … +85 °C |
| Protection type | IP20 |
| Pollution degree | 2 per IEC 61131-2 |
| Operating altitude | 0 … 2000 m / 0 … 6562 ft |
| Mounting position | Horizontal left, horizontal right, horizontal top, horizontal bottom, vertical top and vertical bottom |
| Relative humidity (without condensation) | 95 % |
| Vibration resistance | 4g per IEC 60068-2-6 |
| Shock resistance | 15g per IEC 60068-2-27 |
| EMC immunity to interference | per EN 61000-6-2, marine applications |
| EMC emission of interference | per EN 61000-6-4, marine applications |
| Exposure to pollutants | per IEC 60068-2-42 and IEC 60068-2-43 |
| Permissible $H_2S$ contaminant concentration at a relative humidity 75 % | 10 ppm |
| Permissible $SO_2$ contaminant concentration at a relative humidity 75 % | 25 ppm |

## Commercial data

| | |
|---|---|
| Product Group | 15 (I/O System) |
| PU (SPU) | 1 pcs |
| Packaging type | Box |
| Country of origin | DE |
| GTIN | 4045454483098 |
| Customs tariff number | 85389099990 |


Downloaded from Arrow.com.

## Product classification

| | |
|---|---|
| UNSPSC | 32101602 |

## Environmental Product Compliance

| | |
|---|---|
| CAS-No. | 1303-86-2<br>1317-36-8<br>7439-92-1 |
| REACH Candidate List Substance | Diboron trioxide<br>Lead<br>Lead monoxide |
| RoHS Compliance Status | Compliant,With Exemption |
| RoHS Exemption | 7(c)-I |
| SCIP notification number (Austria) | 1589eb06-3c9b-4b2a-9a0e-406c4454ba2e |
| SCIP notification number (Belgium) | fa924dcf-cb4b-4cdb-ac35-5e702e51c59d |
| SCIP notification number (Bulgaria) | 315379c7-bd29-4aad-a745-f5874086fee5 |
| SCIP notification number (Czech Republic) | db96cd62-4e69-4788-a156-302cbc752581 |
| SCIP notification number (Denmark) | f07fa11a-38ff-4450-a9f5-152ef5d7af19 |
| SCIP notification number (Finland) | dc7be163-05be-475c-a971-585e300cf22b |
| SCIP notification number (France) | 75be9dcb-37dd-4d89-a069-38e3b6b5e644 |
| SCIP notification number (Germany) | 034c0612-dfd3-4fca-97ce-58647c7ff2dd |
| SCIP notification number (Hungary) | 7d105789-a273-4d9a-9550-cec3e352ebc3 |
| SCIP notification number (Italy) | 6097cd19-738c-4de5-9308-2e2227ad40e3 |
| SCIP notification number (Netherlands) | 7a0c925b-cdf3-4cf0-bb75-7c8bfa9c77d5 |
| SCIP notification number (Poland) | 1d1f1fed-eae9-4ff8-b318-b885ec086467 |
| SCIP notification number (Romania) | 47272d0a-b3f2-46f0-a2ec-52a518c6786f |
| SCIP notification number (Sweden) | 90a55879-0afb-49d3-a230-b02a129ba1b0 |

## Approvals / Certificates

### General approvals

| Approval | Standard | Certificate Name |
|---|---|---|
| EAC<br>GZO Almaty Standart | TP TC 020/2011 | EAC CoC 03083 |
| KC<br>National Radio Research Agency | Article 58-2, Clause 3 | MSIP-REM-W43-AIM750 |
| UL<br>Underwriters Laboratories Inc. (ORDINARY LOCATIONS) | UL 508 | E175199 |

### Declarations of conformity and manufacturer's declarations

| Approval | Standard | Certificate Name |
|---|---|---|
| EU-Declaration of Conformity<br>WAGO GmbH & Co. KG | - | - |
| UK-Declaration of Conformity<br>WAGO GmbH & Co. KG | - | - |

### Approvals for marine applications

| Approval | Standard | Certificate Name |
|---|---|---|
| ABS<br>American Bureau of Shipping | - | 22-2219060 |
| BSH<br>Bundesamt fuer Seeschifffahrt und Hydrographie | - | 1104 |

### Approvals for marine applications

| | | |
|---|---|---|
| BV<br>Bureau Veritas S.A. | - | 13453/E0 BV |
| DNV<br>DNV GL SE | DNV-CG-0339,Aug.2021 | TAA0000194 |
| KR<br>Korean Register of Shipping | - | KR HMB05880-AC001 |
| LR<br>Lloyds Register EMEA | - | LR22180952TA |
| PRS<br>Polski Rejestr Statków | - | TE/1101/880590/23 |
| RINA<br>RINA Germany GmbH | - | ELE343521XG001 |


Downloaded from Arrow.com.

## Approvals for hazardous areas

| Approval | Standard | Certificate Name |
|---|---|---|
| ATEX<br>TUEV Nord Cert GmbH | EN 60079-0 | TUEV14ATEX148929X (II 3 G Ex ec IIC T4 Gc) |
| CCCEx<br>CQST/CNEx | CNCA-C23-01 | 2020312310000213 (Ex ec IIC T4 Gc) |
| IECEx<br>TUEV Nord Cert GmbH | IEC 60079-0 | IECEx TUN 14.0035 X (Ex ec IIC T4 Gc) |
| INMETRO<br>TÜV Rheinland do Brasil Ltda. | IEC 60079-0 | TÜV 12.1297 X |
| UKEx<br>WAGO GmbH & Co. KG | EN 60079-0 | UKCA_WA GO22UKEX003X_ec |
| UL<br>Underwriters Laboratories Inc. (HAZARDOUS LOCATIONS) | UL 121201 | E198726 |

## Downloads

### Environmental Product Compliance

| Compliance Search |
|---|
| Environmental Product Compliance 750-454 |

### Documentation

**Manual**

| | | | |
|---|---|---|---|
| System Manual Series 750/753 | | | |
| Product Manual 2-channel, 4-20mA, diff. | V 1.2.0 | pdf<br>2029.37 KB | |

**System Description**

| | | |
|---|---|---|
| 750/753 Series I/O-System – General Product Information | pdf<br>953.35 KB | |
| Overview on WAGO-I/O-SYSTEM 750 approvals | pdf<br>770.48 KB | |

**Bid Text**

| | | | |
|---|---|---|---|
| 750-454 | 19.02.2019 | xml<br>4.20 KB | |
| 750-454 | 17.10.2017 | doc<br>28.50 KB | |
| 750-454 | 17.10.2017 | docx<br>16.76 KB | |

**Instruction Leaflet**

| | | | |
|---|---|---|---|
| CCC Ex (Additional information) | 26.04.2023 | pdf<br>159.76 KB | |


Downloaded from Arrow.com.

## CAD/CAE-Data

| CAD data | CAE data |
|---|---|
| 2D/3D Models 750-454 | EPLAN Data Portal 750-454 |
| | WSCAD Universe 750-454 |
| | ZUKEN Portal 750-454 |

## Device Files

| Device Driver | | | |
|---|---|---|---|
| WAGO USB Service Kabel Treiber / Serie 750 und 857 | 6.5.3.0<br>10.09.2014 | zip<br>4721.96 KB | |

# 1 Compatible Products

## 1.1 Optional Accessories

### 1.1.1 DIN-rail

#### 1.1.1.1 Mounting accessories

Item No.: 210-196
Aluminum carrier rail; 35 x 8.2 mm; 1.6 mm thick; 2 m long; unslotted; similar to EN 60715; silver-colored

Item No.: 210-198
Copper carrier rail; 35 x 15 mm; 2.3 mm thick; 2 m long; unslotted; according to EN 60715; copper-colored

Item No.: 210-508
Steel carrier rail; 35 x 15 mm; 1.5 mm thick; 2 m long; slotted; galvanized; similar to EN 60715; silver-colored

Item No.: 210-197
Steel carrier rail; 35 x 15 mm; 1.5 mm thick; 2 m long; slotted; similar to EN 60715; silver-colored

Item No.: 210-506
Steel carrier rail; 35 x 15 mm; 1.5 mm thick; 2 m long; unslotted; galvanized; similar to EN 60715; silver-colored

Item No.: 210-114
Steel carrier rail; 35 x 15 mm; 1.5 mm thick; 2 m long; unslotted; similar to EN 60715; silver-colored

Item No.: 210-118
Steel carrier rail; 35 x 15 mm; 2.3 mm thick; 2 m long; unslotted; according to EN 60715; silver-colored

Item No.: 210-115
Steel carrier rail; 35 x 7.5 mm; 1 mm thick; 2 m long; slotted; according to EN 60715; "Hole width 18 mm; silver-colored

Item No.: 210-112
Steel carrier rail; 35 x 7.5 mm; 1 mm thick; 2 m long; slotted; according to EN 60715; "Hole width 25 mm; silver-colored

Item No.: 210-504
Steel carrier rail; 35 x 7.5 mm; 1 mm thick; 2 m long; slotted; galvanized; according to EN 60715; silver-colored

Item No.: 210-113
Steel carrier rail; 35 x 7.5 mm; 1 mm thick; 2 m long; unslotted; according to EN 60715; silver-colored

Item No.: 210-505
Steel carrier rail; 35 x 7.5 mm; 1 mm thick; 2 m long; unslotted; galvanized; according to EN 60715; silver-colored

### 1.1.2 Marking

#### 1.1.2.1 Group marker carrier

Item No.: 750-106
Group marker carrier


Downloaded from Arrow.com.

### 1.1.2.2 Marker

Item No.: 750-100
Marker card; as a DIN A4 sheet; plain

Item No.: 2009-145/000-006
Mini-WSB Inline; for Smart Printer; 1700 pieces on roll; stretchable 5 - 5.2 mm; plain; snap-on type; blue

Item No.: 2009-145/000-007
Mini-WSB Inline; for Smart Printer; 1700 pieces on roll; stretchable 5 - 5.2 mm; plain; snap-on type; gray

Item No.: 2009-145/000-023
Mini-WSB Inline; for Smart Printer; 1700 pieces on roll; stretchable 5 - 5.2 mm; plain; snap-on type; green

Item No.: 2009-145/000-012
Mini-WSB Inline; for Smart Printer; 1700 pieces on roll; stretchable 5 - 5.2 mm; plain; snap-on type; orange

Item No.: 2009-145/000-005
Mini-WSB Inline; for Smart Printer; 1700 pieces on roll; stretchable 5 - 5.2 mm; plain; snap-on type; red

Item No.: 2009-145/000-024
Mini-WSB Inline; for Smart Printer; 1700 pieces on roll; stretchable 5 - 5.2 mm; plain; snap-on type; violet

Item No.: 2009-145
Mini-WSB Inline; for Smart Printer; 1700 pieces on roll; stretchable 5 - 5.2 mm; plain; snap-on type; white

Item No.: 2009-145/000-002
Mini-WSB Inline; for Smart Printer; 1700 pieces on roll; stretchable 5 - 5.2 mm; plain; snap-on type; yellow

Item No.: 248-501/000-006
Mini-WSB marking card; as card; not stretchable; plain; snap-on type; blue

Item No.: 248-501/000-007
Mini-WSB marking card; as card; not stretchable; plain; snap-on type; gray

Item No.: 248-501/000-023
Mini-WSB marking card; as card; not stretchable; plain; snap-on type; green

Item No.: 248-501/000-017
Mini-WSB marking card; as card; not stretchable; plain; snap-on type; light green

Item No.: 248-501/000-012
Mini-WSB marking card; as card; not stretchable; plain; snap-on type; orange

Item No.: 248-501/000-005
Mini-WSB marking card; as card; not stretchable; plain; snap-on type; red

Item No.: 248-501/000-024
Mini-WSB marking card; as card; not stretchable; plain; snap-on type; violet

Item No.: 248-501
Mini-WSB marking card; as card; not stretchable; plain; snap-on type; white

Item No.: 248-501/000-002
Mini-WSB marking card; as card; not stretchable; plain; snap-on type; yellow

### 1.1.2.3 Marker carrier

Item No.: 750-103
Group marker carrier

## 1.1.3 Shield termination

### 1.1.3.1 Shield clamping saddles

Item No.: 790-108
Shield clamping saddle; 11 mm wide; diameter of compatible conductor; 3 … 8 mm

Item No.: 790-208
Shield clamping saddle; 12.4 mm wide; 3 … 8 mm

Item No.: 790-116
Shield clamping saddle; 19 mm wide; diameter of compatible conductor; 7 … 16 mm

Item No.: 790-216
Shield clamping saddle; 21.8 mm wide; 6 … 16 mm

Item No.: 790-124
Shield clamping saddle; 27 mm wide; diameter of compatible conductor; 6 … 24 mm

Item No.: 790-220
Shield clamping saddle; 30 mm wide; 6 … 20 mm

Item No.: 790-140
Shield clamping saddle; diameter of compatible conductor


Downloaded from Arrow.com.

## 1.1.4 System enclosure

### 1.1.4.1 System enclosure

Item No.: 850-825
IP65 enclosure; Aluminium (RAL 7032); WxHxD (160x100x160 mm); 9 x M12, 4 x M20

Item No.: 850-826
IP65 enclosure; Aluminium (RAL 7032); WxHxD (240x100x160 mm); 4 x M20, 4 x M16, 14 x M12 cable grip

Item No.: 850-827
IP65 enclosure; Aluminium (RAL 7032); WxHxD (320x100x160 mm); 4 x M20, 8 x M16, 17 x M12 cable grip

Item No.: 850-828
IP65 enclosure; Aluminium (RAL 7032); WxHxD (480x100x160 mm); 4 x M20, 10 x M16, 35 x M12 cable grip

Item No.: 850-826/002-000
IP65 enclosure; Aluminium (RAL 7035); WxHxD (240x100x160 mm); 4 x M20, 4 x M16, 14 x M12 cable grip

Item No.: 850-827/002-000
IP65 enclosure; Aluminium (RAL 7035); WxHxD (320x100x160 mm); 4 x M20, 8 x M16, 17 x M12 cable grip

Item No.: 850-828/002-000
IP65 enclosure; Aluminium (RAL 7035); WxHxD (480x100x160 mm); 4 x M20, 10 x M16, 35 x M12 cable grip

Item No.: 850-834
IP65 enclosure; Polyester (RAL 7032); WxHxD (164x100x164 mm); 9 x M12, 4 x M20

Item No.: 850-835
IP65 enclosure; Polyester (RAL 7032); WxHxD (244x100x164 mm); 4 x M20, 4 x M16, 14 x M12 cable grip

Item No.: 850-836
IP65 enclosure; Polyester (RAL 7032); WxHxD (324x100x164 mm); 4 x M20, 8 x M16, 17 x M12 cable grip

Item No.: 850-814/002-000
IP65 enclosure; Sheet steel (RAL 7035); WxHxD (200x120x200 mm); without flange plate

Item No.: 850-815/002-000
IP65 enclosure; Sheet steel (RAL 7035); WxHxD (300x120x200 mm); without flange plate

Item No.: 850-816/002-000
IP65 enclosure; Sheet steel (RAL 7035); WxHxD (400x120x200 mm); without flange plate

Item No.: 850-817/002-000
IP65 enclosure; Sheet steel (RAL 7035); WxHxD (600x120x200 mm); without flange plate


Downloaded from Arrow.com.