MICRO SWITCH
a Honeywell Division
FED. MFG. CODE 91929

SWITCH-ENCLOSED

CATALOG LISTING
BFL1-AW2

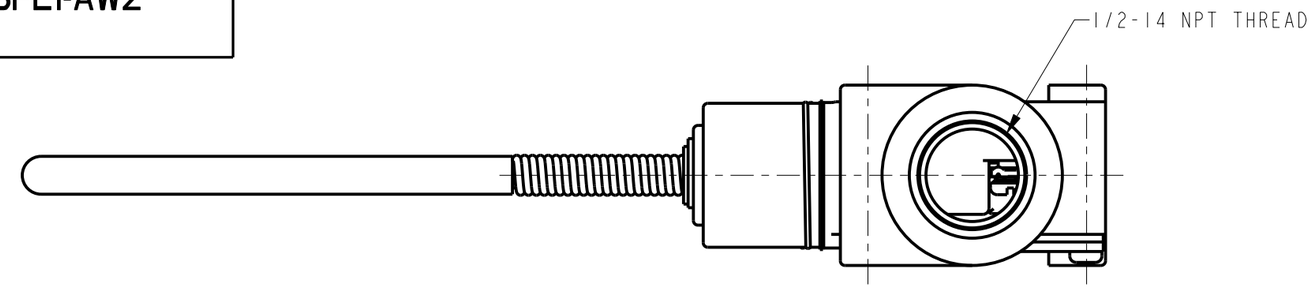

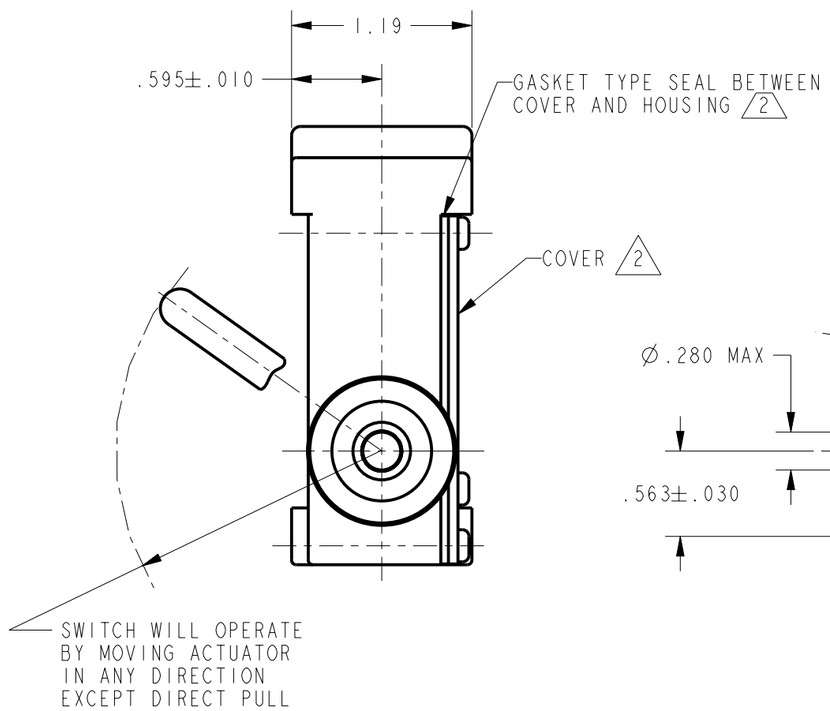

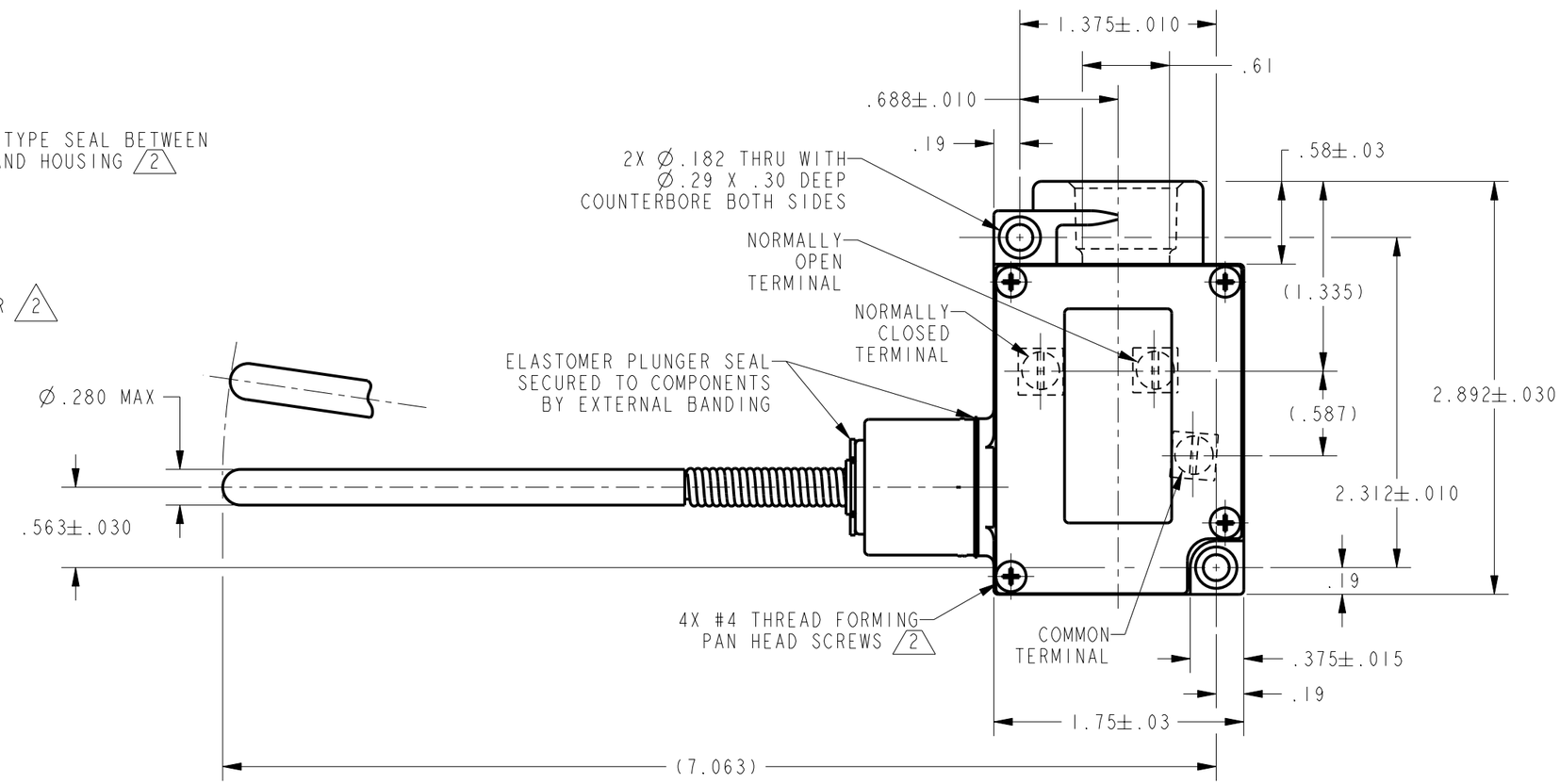

NOTES
1 - 3X 6-32 UNC PRESSURE PLATE TERMINAL SCREWS
2 FURNISHED UNASSEMBLED

THIS DRAWING COVERS A PROPRIETARY ITEM AND IS THE PROPERTY OF MICRO SWITCH. A DIVISION OF HONEYWELL. THIS DRAWING IS NOT TO BE COPIED OR USED WITHOUT THE APPROVAL OF MICRO SWITCH

CHARACTERISTICS	ELECTRICAL DATA
OPERATING POSITION .....15° MAX	CONTACT ARRANGEMENT S P D T
OPERATING FORCE .....7 OZ MAX	L162 5A 125, 250, 277 VAC 1/10HP 250 VAC

THIRD ANGLE PROJECTION

SCALE FULL

DO NOT SCALE PRINT

UNLESS OTHERWISE SPECIFIED TOLERANCES ARE

ONE PLACE	(.0)	±.030
TWO PLACE	(.00)	±.015
THREE PLACE	(.000)	±.005
ANGLES		±

WEIGHT

ANSI Y14.5M-1982 APPLIES

BFL1-AW2
CATALOG LISTING
PAGE 1 OF 1
RELEASE NO. 203802
REPLACES
ISSUE 1
CHECK
REVISIONS
CHECK 05SEP01
CHECK SAV
CHECK 05SEP01
PTC/CAD 3D
DRAWN TRF

Downloaded from Arrow.com.