Plastic Infrared Emitting Diode

OP266AA, OP266AC, OP266AD



Features:

- T-1 (3 mm) package style
- Narrow irradiance pattern
- Dome lens
- Higher power output than GaAs at equivalent drive currents
- 850 nm LED

Description:

Each device in the **OP266AA** series is a high intensity gallium aluminum arsenide infrared emitting diode (GaAlAs) that is molded in an IR transmissive clear or amber-tinted epoxy package with a dome lens. Devices feature a narrow source irradiance pattern and a variety of electrical characteristics. The small T-1 package style makes these devices ideal for space-limited applications.

These devices are mechanically and spectrally matched to other OPTEK products as follows:

The OP266AA family conform to the OP506 and OP535 series devices.

Please refer to Application Bulletin 210 for additional thermal design information.

Applications:

- Space-limited applications
- Applications requiring coupling efficiency
- Battery-operated or voltage-limited applications

Ordering Information					
Part Number	**LED Peak Wavelength**	**Output Power (mW/cm²) Min / Max**	**I_F (mA) Typ / Max**	**Total Beam Angle**	**Lead Length**
OP266AA	850 nm	5.5 / NA	20 / 50	18°	MIN 0.50”
OP266AC		11.5 / 16.5			
OP266AD		15.5 / NA			

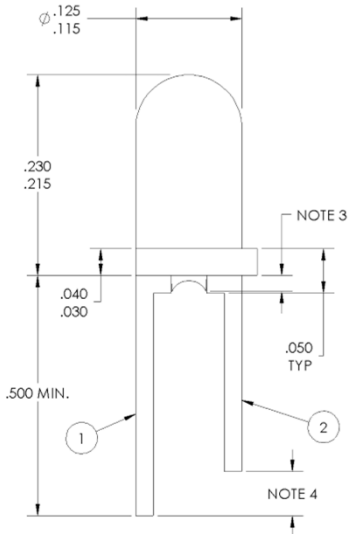

NOTES:

1. Outside discrete shell is polysulfone CLEAR.
2. This LED is built with a GaAlAs chip.
3. Max allowable epoxy miniscus is 0.030”.
4. For identification purposes, Cathode lead is .065” ± .035” longer than the anode lead.
5. Dimensions are in inches.



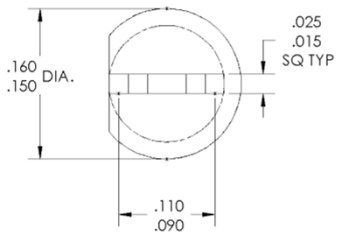

Pin #	LED
1	Cathode
2	Anode

CONTAINS POLYSULFONE

To avoid stress cracking, we suggest using ND Industries’ **Vibra-Tite** for thread-locking. **Vibra-Tite** evaporates fast without causing structural failure in OPTEK'S molded plastics.

RoHS

General Note
TT Electronics reserves the right to make changes in product specification without notice or liability. All information is subject to TT Electronics’ own data and is considered accurate at time of going to print.

© TT Electronics plc

Downloaded from Arrow.com.

Electrical Specifications

Absolute Maximum Ratings (T_A = 25° C unless otherwise noted)

Storage and Operating Temperature Range	-40° C to +100° C
Reverse Voltage	2.0 V
Continuous Forward Current	50 mA
Peak Forward Current (1 µs pulse width, 300 pps)	3.0 A
Lead Soldering Temperature [1/16 inch (1.6 mm) from case for 5 seconds with soldering iron] (1)	260° C
Power Dissipation (2)	100 mW

Electrical Characteristics (T_A = 25° C unless otherwise noted)

SYMBOL	PARAMETER	MIN	TYP	MAX	UNITS	TEST CONDITIONS
Input Diode						
$E_{E(APT)}$	Apertured Radiant Incidence OP266AA OP266AC OP266AD	 5.50 11.50 15.50	 - - -	 - 16.5 -	mW/cm^2	I_F = 20 mA (3) Aperture = 0.081" diameter Distance = 0.590" from seating surface to aperture surface
V_F	Forward Voltage	1.00	-	1.80	V	I_F = 20 mA
I_R	Reverse Current	-	10	-	µA	V_R = 10 V
λ_P	Wavelength at Peak Emission	-	850	-	nm	I_F = 10 mA
β	Spectral Bandwidth between Half Power Points	-	50	-	nm	I_F = 20 mA
$\Delta\lambda_P/\Delta_T$	Spectral Shift with Temperature	-	±0.18	-	nm/° C	I_F = Constant
θ_{HP}	Emission Angle at Half Power Points	-	18	-	Degree	I_F = 20 mA
t_r	Output Rise Time	-	10	-	ns	$I_{F(PK)}$ = 100 mA, PW = 10 µs, D.C. = 10.0 %
t_f	Output Fall Time	-	10	-	ns	$I_{F(PK)}$ = 100 mA, PW = 10 µs, D.C. = 10.0 %

Notes:

(1) RMA flux is recommended. Duration can be extended to 10 seconds when flow soldering. A maximum of 20 grams force may be applied to the leads when soldering.

(2) Derate linearly at 1.07 mW/° C above 25° C.

(3) $E_{E(APT)}$ is a measurement of the average apertured radiant incidence upon a sensing area 0.081" (2.06 mm) in diameter, perpendicular to and centered on the mechanical axis of the lens and 0.590" (14.99 mm) from the measurement surface. $E_{E(APT)}$ is not necessarily uniform within the measured area.

General Note
TT Electronics reserves the right to make changes in product specification without notice or liability. All information is subject to TT Electronics' own data and is considered accurate at time of going to print.

© TT Electronics plc

Downloaded from Arrow.com.

Typical Performance

OP266AA, AC, AD

Forward Voltage vs Forward Current vs Temperature

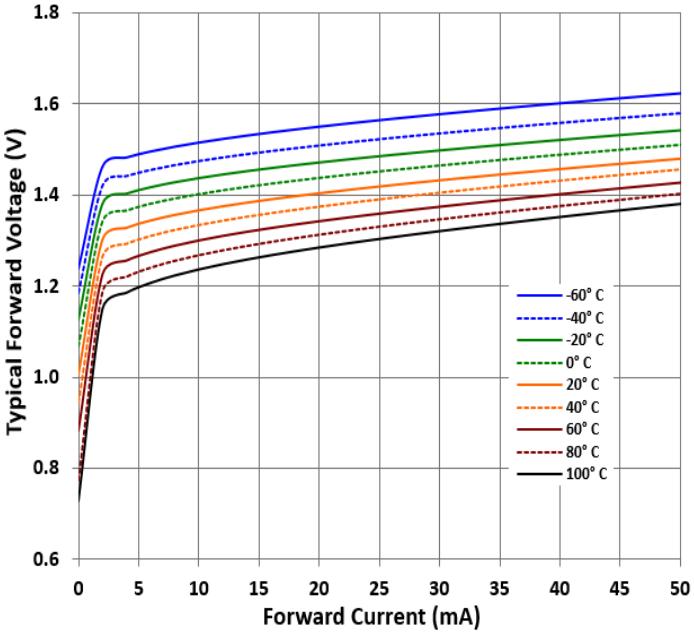

Optical Power vs Forward Current vs Temperature

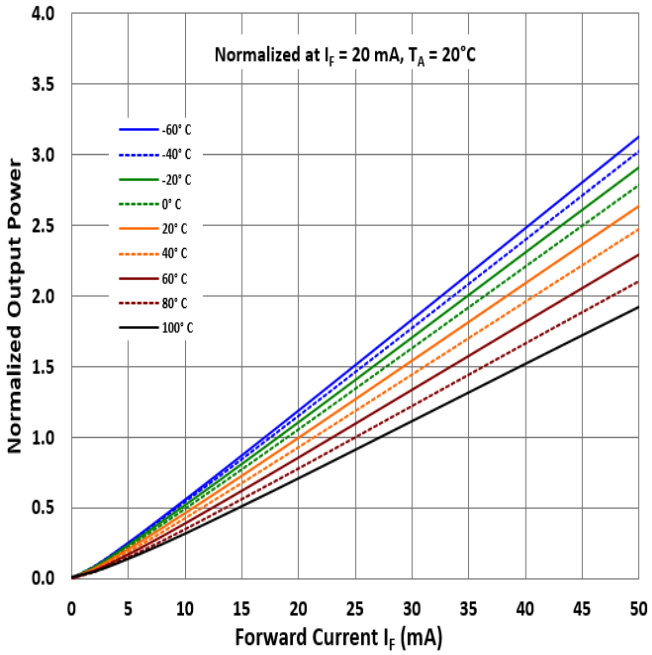

Relative Radiant Intensity vs. Angular Displacement

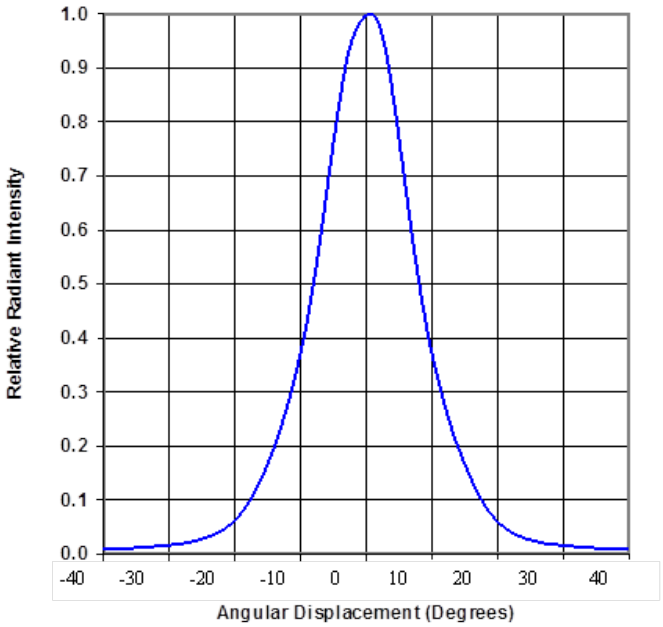

General Note

TT Electronics reserves the right to make changes in product specification without notice or liability. All information is subject to TT Electronics' own data and is considered accurate at time of going to print.

© TT Electronics plc

Downloaded from Arrow.com.