Battery Fuel Gauge LSI [Smart LiB Gauge] for 1-Cell Lithium-ion/ Polymer (Li+) with Low Power 2 μA Operation LC709204F

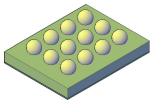

WLCSP12 1.48x1.91x0.51
CASE 567XE

MARKING DIAGRAM

204** = 20401 (LC709204FXE−01TBG)
A = Assembly Site
WL = Wafer Lot Number
YW = Assembly Start Week

ORDERING INFORMATION

See detailed ordering and shipping information on page 20 of this data sheet.

DISCONTINUED
THIS DEVICE IS NOT AVAILABLE
PLEASE CONTACT YOUR onsemi
REPRESENTATIVE FOR INFORMATION

Overview

LC709204F is a Fuel Gauge for 1−Cell Lithium−ion/Polymer batteries. It is part of our ***Smart LiB Gauge*** family of Fuel Gauges which measure the battery RSOC (Relative State Of Charge) using its unique algorithm called **HG−CVR2**. The **HG−CVR2** algorithm provides accurate RSOC information even under unstable conditions (e.g. changes of battery; temperature, loading, aging and self−discharge). An accurate RSOC contributes to the operating time of portable devices. The Fuel Gauge (in other words, Gas Gauge, Battery Monitor or Battery Gauge) feature of **HG−CVR2** algorithm makes LSI highly applicable in various application. The LSI can immediately start battery measurement by setting a few parameters after battery insertion. Learning cycles that make complicated manufacturing process of applications can be avoided.

The LSI also supports battery safety by alarm functions and SOH (State of Health) reporting to the application processor. The operating consumption current is very low 2 μA and it is suitable for applications such as wearables and 1 series N parallel batteries.

Features

- **HG−CVR2** Algorithm Technology
  - Small Footprint: No Need for Current Sensing Resistor
  - Accurate RSOC of Aging Battery
  - Stable Gauging by Automatic Convergence of Error
  - Immediate Accurate Gauging after Battery Insertion
  - Eliminates Learning Cycle
- Low Power Consumption
  - 2 μA Operational Mode Current
- Improvement of the Battery Safety by Alarm Function
  RSOC / Voltage / Temperature
- Battery Lifetime Measurement
  SOH / Cycle Count / Operating Time
- Remaining Time Estimation
  Time to Full / Time to Empty
- Three Temperature Inputs
  - Inputs to sense two NTC Thermistors
  - Via I^2C
- Detection of Battery Operating Conditions
  Charging / Discharging
- Detection of Battery Insertion
- I^2C Interface (supported up to 400 kHz)
- These Devices are Pb−Free, Halogen Free/BFR Free and are RoHS Compliant

Applications

- Wearables / IoT Devices
- Smartphones/PDA Devices
- Digital Cameras
- Portable Game Players
- USB-related Devices

© Semiconductor Components Industries, LLC, 2019

Downloaded from Arrow.com.

Application Circuit Example

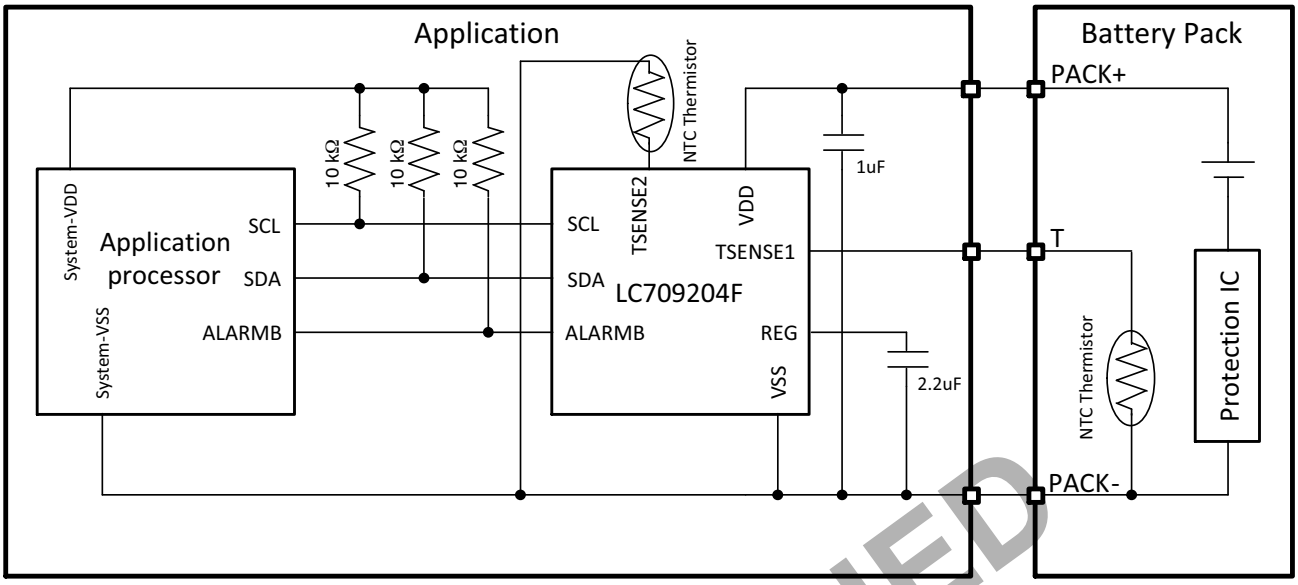

Figure 1. Example of an Application Schematic using LC709204F
(The temperature is measured using TSENSE1 pin.)

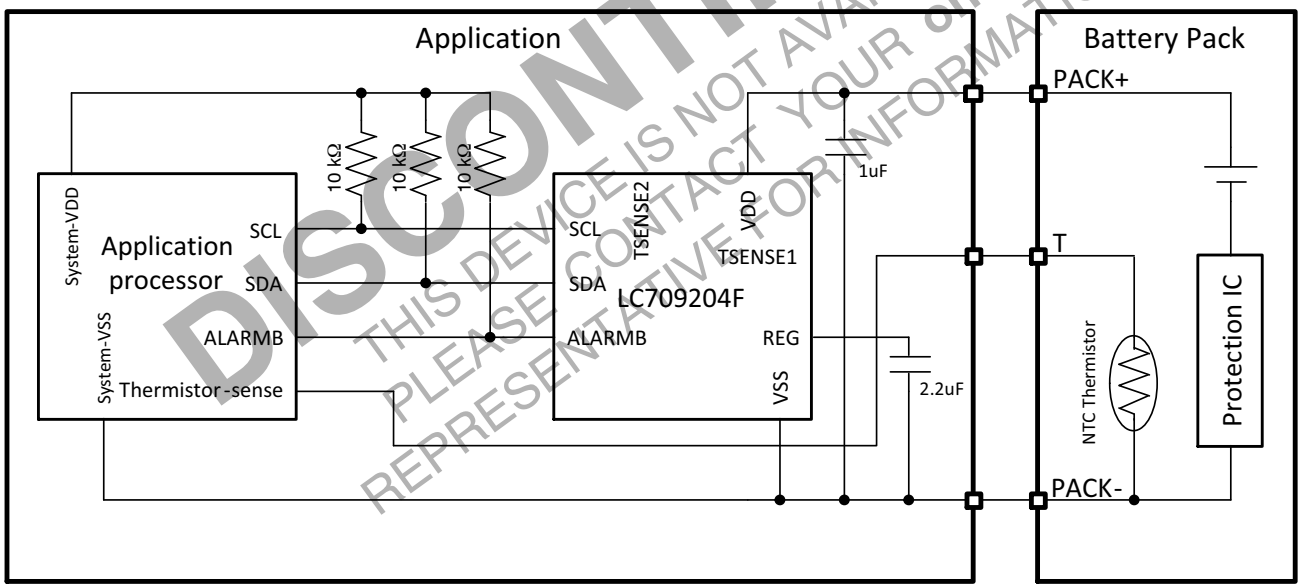

Figure 2. Example of an Application Schematic using LC709204F
(The Temperature is sent via I²C.)

DISCONTINUED
THIS DEVICE IS NOT AVAILABLE
PLEASE CONTACT YOUR onsemi
REPRESENTATIVE FOR INFORMATION

Downloaded from Arrow.com.

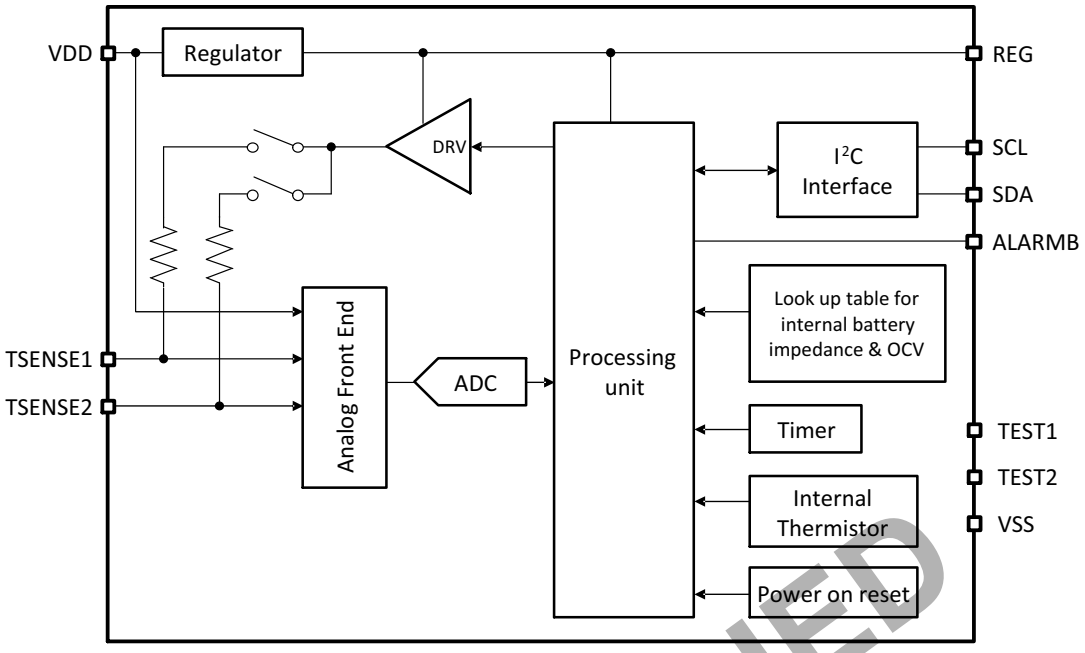

Figure 3. Block Diagram

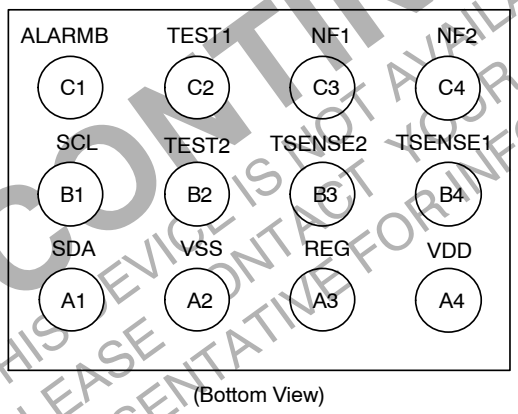

Figure 4. Pin Assignment

DISCONTINUED
THIS DEVICE IS NOT AVAILABLE
PLEASE CONTACT YOUR onsemi
REPRESENTATIVE FOR INFORMATION

Downloaded from Arrow.com.

Table 1. PIN FUNCTION

WLCSP12	Name	I/O	Description
A1	SDA	I/O	I^2C Data pin (open drain). Pull−up must be done externally.
B1	SCL	I/O	I^2C Clock pin (open drain). Pull−up must be done externally.
C1	ALARMB	O	This pin indicates alarm by low output (open drain). Pull−up must be done externally. Keep this pin OPEN when not in use.
A2	V_{SS}	–	Connect this pin to the battery's negative (–) pin.
B2	TEST2	I	Connect this pin to the battery's negative (–) pin.
C2	TEST1	I	Connect this pin to the battery's negative (–) pin.
A3	REG	O	Regulator output. Connect this pin to the capacitor.
B3	TSENSE2	I/O	Sense input and power supply for a thermistor. Connect 10 kΩ NTC thermistor to measure "Ambient temperature (0x30)". Keep this pin OPEN when not in use.
C3	NF1	–	No function pin. Keep this pin OPEN. Short−pin with TSENSE2 is permitted to pull out it.
A4	VDD	–	Connect this pin to the battery's positive (+) pin.
B4	TSENSE1	I/O	Sense input and power supply for a thermistor. Connect 10 kΩ NTC thermistor to measure "Cell temperature (0x08)". Keep this pin OPEN when not in use.
C4	NF2	–	No function pin. Keep this pin OPEN.

Table 2. ABSOLUTE MAXIMUM RATINGS (T_A = 25°C, V_{SS} = 0 V)

Parameter	Symbol	Pin/Remarks	Conditions	V_{DD} (V)	Specification			Unit
					Min	Typ	Max	
Maximum Supply Voltage	V_{DD} max	VDD		–	−0.3	–	+6.5	V
Input Voltage	V_I (1)	ALARMB, SDA, SCL, NF1, NF2		–	−0.3	–	+6.5	
Output Voltage	V_o (1)	REG, TSENSE1, TSENSE2		–	−0.3	–	+4.6	
Allowable Power Dissipation	$P_{d\ max}$		T_A = −40 to +85°C	–	–	–	150	mW
Operating Ambient Temperature	T_{aopr}			–	−40	–	+85	°C
Storage Ambient Temperature	T_{stg}			–	−40	–	+125	

Stresses exceeding those listed in the Maximum Ratings table may damage the device. If any of these limits are exceeded, device functionality should not be assumed, damage may occur and reliability may be affected.

Table 3. ALLOWABLE OPERATING CONDITIONS (T_A = −40 to +85°C, V_{SS} = 0 V)

Parameter	Symbol	Pin/Remarks	Conditions	V_{DD} (V)	Specification			Unit
					Min	Typ	Max	
Operating Supply Voltage	V_{DD} (1)	VDD		–	2.5	–	5.0	V

Functional operation above the stresses listed in the Recommended Operating Ranges is not implied. Extended exposure to stresses beyond the Recommended Operating Ranges limits may affect device reliability.

DISCONTINUED
THIS DEVICE IS NOT AVAILABLE
PLEASE CONTACT YOUR onsemi
REPRESENTATIVE FOR INFORMATION

Downloaded from Arrow.com.

Table 4. ELECTRICAL CHARACTERISTICS (T_A = −40 to +85°C, V_{SS} = 0 V, Typ: 4 V, T_A = 25°C)

Parameter	Symbol	Pin/ Remarks	Conditions	V_{DD} [V]	Specification Min	Typ	Max	Unit
LDO								
LDO Output Voltage	V_{REG}	REG		2.5 to 5.0	2.3	2.7	3.0	V
CONSUMPTION CURRENT								
Operational Mode	I_{DD} (1)	VDD	Ta = −20°C to +70°C Average current with 0.01C Constant discharge.	2.5 to 5.0		2		μA
Sleep Mode	I_{DD} (2)		Ta = −20°C to +70°C	2.5 to 5.0		1.3		
INPUT / OUTPUT								
High Level Input Voltage	V_{IH}	ALARMB, SDA, SCL		2.5 to 5.0	1.4		5.5	V
Low Level Input Voltage	V_{IL}	ALARMB, SDA, SCL		2.5 to 5.0			0.5	
High Level Input Current	I_{IH}	ALARMB, SDA, SCL, NF1, NF2	V_{IN} = V_{DD} (including output transistor off leakage current)	2.5 to 5.0			1	μA
Low Level Input Current	I_{IL}	ALARMB, SDA, SCL, NF1, NF2	V_{IN} = V_{SS} (including output transistor off leakage current)	2.5 to 5.0	−1			
Low Level Output Voltage	V_{OL} (1)	ALARMB, SDA, SCL	I_{OL} = 3.0 mA	3.3 to 5.0			0.4	V
	V_{OL} (2)		I_{OL} = 1.3 mA	2.5 to 5.0			0.4	
Hysteresis Voltage	VHYS	ALARMB, SDA, SCL		2.5 to 5.0		0.2		
Pull−up Resistor Resistance	Rpu	TSENSE1, TSENSE2		2.5 to 5.0		10		kΩ
Pull−up Resistor Temperature Coefficient	Rpuc	TSENSE1, TSENSE2	Ta = −20°C to +70°C	2.5 to 5.0	−0.05		+ 0.05	%/°C
POWER ON RESET								
Reset Release Voltage	V_{RR}	VDD					2.4	V
Initialization Time after Reset Release	T_{INIT}			2.4 to 5.0			90	ms
TIMER								
Time Measurement Accuracy	T_{ME}		Ta = 25°C	2.5 to 5.0	−1		+1	%
BATTERY VOLTAGE								
Voltage Measurement Accuracy	V_{ME} (1)	VDD	Ta = +25°C	4	−7.5		+7.5	mV/cell
	V_{ME} (2)		Ta = −20°C to +70°C	2.5 to 5.0	−20		+20	

Product parametric performance is indicated in the Electrical Characteristics for the listed test conditions, unless otherwise noted. Product performance may not be indicated by the Electrical Characteristics if operated under different conditions.

DISCONTINUED
THIS DEVICE IS NOT AVAILABLE
PLEASE CONTACT YOUR onsemi
REPRESENTATIVE FOR INFORMATION

Downloaded from Arrow.com.

Table 5. I²C SLAVE CHARACTERISTICS (T_A = −40 to +85°C, V_{SS} = 0 V)

Parameter	Symbol	Pin/Remarks	Conditions	V_{DD} (V)	Specification		Unit
					Min	Max	
Clock Frequency	T_{SCL}	SCL		2.5 to 5.0	–	400	kHz
Bus Free Time between STOP Condition and START Condition	T_{BUF}	SCL, SDA	(See Figure 5)		1.3	–	µs
Hold Time (Repeated) START Condition. First Clock Pulse is Generated after this Interval	$T_{HD:STA}$	SCL, SDA	(See Figure 5)		0.6	–	µs
Repeated START Condition Setup Time	$T_{SU:STA}$	SCL, SDA	(See Figure 5)		0.6	–	µs
STOP Condition Setup Time	$T_{SU:STO}$	SCL, SDA	(See Figure 5)		0.6	–	µs
Data Hold Time	$T_{HD:DAT}$	SCL, SDA	(See Figure 5)		0	–	µs
Data Setup Time	$T_{SU:DAT}$	SCL, SDA	(See Figure 5)		100	–	ns
Clock Low Period	T_{LOW}	SCL	(See Figure 5)		1.3	–	µs
Clock High Period	T_{HIGH}	SCL	(See Figure 5)		0.6	–	µs
Time-out Interval (Notes 1, 2)	T_{TMO}	SCL, SDA	(See Figure 6)		12	14	s

1. This LSI resets I²C communication if the communication takes more than T_{TMO}. It initializes an internal timer to measure the interval when it detects ninth clock pulse. It can receive a new START condition after the reset.
2. This LSI may lose I²C communication at this reset operation. Then if a master can't receive a response it must restart transaction from START condition.

DISCONTINUED
THIS DEVICE IS NOT AVAILABLE
PLEASE CONTACT YOUR onsemi
REPRESENTATIVE FOR INFORMATION

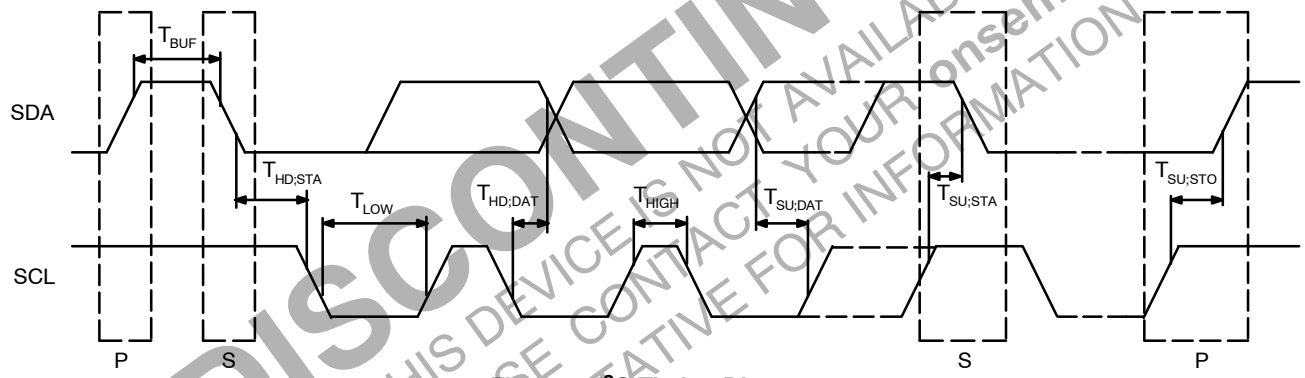

Figure 5. I²C Timing Diagram

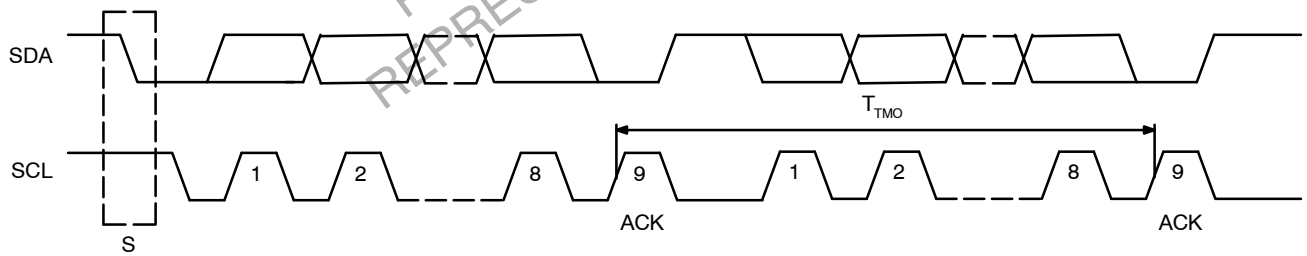

Figure 6. I²C Time-out Interval

Downloaded from Arrow.com.

I²C Communication Protocol

Communication protocol type: I²C
Frequency: Supported up to 400 kHz
Slave Address: 0001011 (The first 8−bits after the Strat Condition is 0x16 (WRITE) or 0x17 (READ).)
This LSI will stretch the clock.

Bus Protocols

S	:	Start Condition
Sr	:	Repeated Start Condition
Rd	:	Read (bit value of 1)
Wr	:	Write (bit value of 0)
A	:	ACK (bit value of 0)
N	:	NACK (bit value of 1)
P	:	Stop Condition
CRC−8	:	Slave Address to Last Data (CRC−8−ATM : ex.3778 mV : 0x16, 0x09, 0x17, 0xC2, 0x0E → 0x86)
	:	Master-to-Slave
	:	Slave-to-Master
…	:	Continuation of protocol

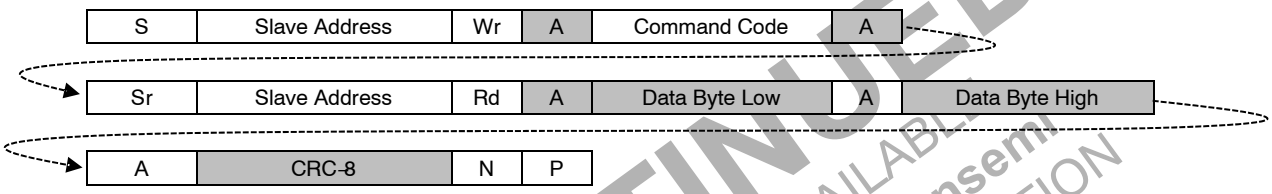

* When you do not read CRC−8, LSI data is not reliable. CRC−8−ATM ex: (5 bytes) 0x16, 0x09, 0x17, 0xC2, 0x0E → 0x86

Figure 7. Read Word Protocol

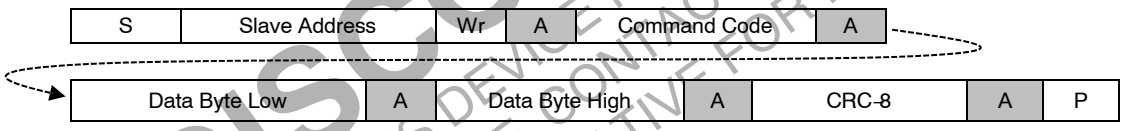

* When you do not add CRC−8, the Written data (Data byte Low/High) become invalid.
CRC−8−ATM ex: (4 bytes) 0x16, 0x09, 0x55, 0xAA → 0x3B

Figure 8. Write Word Protocol

DISCONTINUED
THIS DEVICE IS NOT AVAILABLE
PLEASE CONTACT YOUR onsemi
REPRESENTATIVE FOR INFORMATION

Downloaded from Arrow.com.

Table 6. FUNCTION OF REGISTERS

Command Code	Register Name	R/W	Range	Unit	Description	Initial Value
0x00, 0x01	No Function	–	–	Registers that the access is prohibited		–
0x03	TimeToEmpty	R	0x0000 to 0xFFFF	minutes	Displays estimated time to empty.	0xFFFF
0x04	Before RSOC	W	0xAA55: 1st sampling 0xAA56: 2nd sampling 0xAA57: 3rd sampling 0xAA58: 4th sampling	Optional Command, especially for obtaining the voltage with intentional timing after power on reset, see Figure 9.		–
0x05	TimeToFull	R	0x0000 to 0xFFFF	minutes	Displays estimated time to full.	0xFFFF
0x06	TSENSE1 Thermistor B	R/W	0x0000 to 0xFFFF	K	Sets B−constant of the TSENSE1 thermistor.	0x0D34 (3380K)
0x07	Initial RSOC	W	0xAA55: Initialize RSOC	Initialize RSOC with current voltage when 0xAA55 is set.		–
0x08	Cell Temperature (TSENSE1)	R	0x0980 to 0x0DCC (−30°C to 80°C)	0.1K (0.0°C = 0x0AAC)	Displays Cell Temperature.	0x0BA6 (25°C)
		W			Sets Cell Temperature in I2C mode.	
0x09	Cell Voltage	R	0x09C4 to 0x1388 (2.5 V to 5 V)	mV	Displays Cell Voltage.	–
0x0A	Current Direction	R/W	0x0000: Auto mode 0x0001: Charge mode 0xFFFF: Discharge mode	Selects Auto/Charge/Discharge mode.		0x0000
0x0B	APA (Adjustment Pack Application)	R/W	0x0000 to 0xFFFF	Sets Adjustment parameter.		–
0x0C	APT (Adjustment Pack Thermistor)	R/W	0x0000 to 0xFFFF	Sets a value to adjust temperature measurement delay timing.		0x001E
0x0D	RSOC	R/W	0x0000 to 0x0064 (0% to 100%)	%	Displays RSOC value based on a 0−100 scale	–
0x0E	TSENSE2 Thermistor B	R/W	0x0000 to 0xFFFF	K	Sets B−constant of the TSENSE2 thermistor.	0x0D34 (3380K)
0x0F	ITE (Indicator to Empty)	R	0x0000 to 0x03E8 (0.0% to 100.0%)	0.1%	Displays RSOC value based on a 0−1000 scale	–
0x11	IC Version	R	0x0000 to 0xFFFF	Displays an internal management code.		–
0x12	Change Of The Parameter	R/W	0x0000 to 0x0004	Selects a battery profile.		0x0000
0x13	Alarm Low RSOC	R/W	0x0000: Disable 0x0001 to 0x0064: Threshold (1% to 100%)	%	Sets RSOC threshold to generate Alarm signal.	0x0000
0x14	Alarm Low Cell Voltage	R/W	0x0000: Disable 0x09C4 to 0x1388: Threshold (2.5 V to 5 V)	mV	Sets Voltage threshold to generate Low Cell Voltage Alarm signal.	0x0000
0x15	IC Power Mode	R/W	0x0001: Operational mode 0x0002: Sleep mode	Selects Power mode.		0x0002
0x16	Status Bit	R/W	0x0000 to 0x0003	BIT0: Controls TSENSE1 thermistor BIT1: Controls TSENSE2 thermistor		0x0000
0x17	Cycle Count	R	0x0000 to 0xFFFF	count	Displays cycle count.	0x0000
0x19	Battery Status	R/W	0x0000 to 0xFFFF	Displays various kinds of alarm and estimated state of the battery.		0x00C0
0x1A	Number of the Parameter	R	0x0000 to 0xFFFF	Displays Battery profile code.		–

DISCONTINUED
THIS DEVICE IS NOT AVAILABLE
PLEASE CONTACT YOUR onsemi
REPRESENTATIVE FOR INFORMATION

Downloaded from Arrow.com.

Table 6. FUNCTION OF REGISTERS (continued)

Command Code	Register Name	R/W	Range	Unit	Description	Initial Value
0x1C	Termination Current Rate	R/W	0x0002 to 0x001E: Threshold (0.02C to 0.3C)	0.01C	Sets termination current rate.	0x0002
0x1D	Empty Cell Voltage	R/W	0x0000: Disable 0x09C4 to 0x1388: Threshold (2.5 V to 5 V)	mV	Sets empty cell voltage.	0x0000
0x1E	ITE Offset	R/W	0x0000 to 0x03E8 (0.0% to 100.0%)	0.1%	Sets ITE so that RSOC is 0%.	0x0000
0x1F	Alarm High Cell Voltage	R/W	0x0000: Disable 0x09C4 to 0x1388: Threshold (2.5 V to 5 V)	mV	Sets Voltage threshold to generate High Cell Voltage Alarm signal.	0x0000
0x20	Alarm Low Temperature	R/W	0x0000: Disable 0x0980 to 0x0DCC: Threshold (−30°C to 80°C)	0.1K (0.0℃ = 0x0AAC)	Sets Voltage threshold to generate Low Temperature alarm signal.	0x0000
0x21	Alarm High Temperature	R/W	0x0000: Disable 0x0980 to 0x0DCC: Threshold (−30°C to 80°C)	0.1K (0.0℃ = 0x0AAC)	Sets Voltage threshold to generate High Temperature alarm signal.	0x0000
0x25, 0x24	Total Run Time	R/W	0x00000000 to 0x00FFFFFF 0x24: Lower 16bits 0x25: Higher 8bits	minutes	Displays operating time.	0x0000
0x27, 0x26	Accumulated Temperature	R/W	0x00000000 to 0xFFFFFFFF 0x26: Lower 16bits 0x27: Higher 16bits	2K minutes	Displays accumulated temperature.	0x0000
0x29, 0x28	Accumulated RSOC	R/W	0x00000000 to 0xFFFFFFFF 0x28: Lower 16bits 0x29: Higher 16bits	% minutes	Displays accumulated RSOC.	0x0000
0x2A	Maximum Cell Voltage	R/W	0x09C4 to 0x1388 (2.5V to 5V)	mV	Displays the maximum historical Cell Voltage.	0x0000
0x2B	Minimum Cell Voltage	R/W	0x09C4 to 0x1388 (2.5V to 5V)	mV	Displays the minimum historical Cell Voltage.	0x1388 (5V)
0x2C	Maximum Cell Temperature (TSENSE1)	R/W	0x0980 to 0x0DCC (−30℃ to 80℃)	0.1K (0.0℃ = 0x0AAC)	Displays the historical maximum temperature of TSENSE1.	0x0980 (−30℃)
0x2D	Minimum Cell Temperature (TSENSE1)	R/W	0x0980 to 0x0DCC (−30℃ to 80℃)	0.1K (0.0℃ = 0x0AAC)	Displays the historical minimum temperature of TSENSE1.	0x0DCC (80℃)
0x30	Ambient Temperature (TSENSE2)	R	0x0980 to 0x0DCC (−30℃ to 80℃)	0.1K (0.0℃ = 0x0AAC)	Displays Ambient Temperature.	0x0BA6 (25℃)
0x32	State of Health	R	0x0000 to 0x0064	%	Displays State of Health of a battery on a 0−100 scale	0x0064 (100%)
0x37, 0x36	User ID	R	0x00000000 to 0xFFFFFFFF 0x36: Lower 16bits 0x37: Higher 16bits	Displays 32bits User ID.		(Note 3)
More than 0x40	No Function	–	–	Registers that the access is prohibited.		–

0xXXXX = Hexadecimal notation

3. The initial value of User ID is set on IC at ID Writing process. Please refer to an application note about how to write.

DISCONTINUED
THIS DEVICE IS NOT AVAILABLE
PLEASE CONTACT YOUR onsemi
REPRESENTATIVE FOR INFORMATION

Downloaded from Arrow.com.

TimeToEmpty (0x03)

This register contains estimated time to empty in minutes. The empty is defined as the state that RSOC(0x0D) is 0%.

Before RSOC (0x04)

This command is the optional Command, used especially for obtaining the voltage with intentional timing after power on reset. Generally the LSI will get initial RSOC by Open Circuit Voltage (OCV) of a battery. It is desirable for battery current to be less than 0.025C to get expected OCV. (i.e. less than 75 mA for 3000 mAh design capacity battery.) The LSI initializes RSOC by measured battery voltage in initial sequence. But if reported RSOC after reset release is not expected value, “Before RSOC” command or “Initial RSOC” command can initialize RSOC again.

The LSI samples battery voltage four times during initial sequence. The sampling interval is around 10 ms. See Figure 9. RSOC is initialized using the 1st sampled voltage automatically with the initial sequence. The four sampled voltage are maintained until the LSI is reset. “Before RSOC” command can select a voltage for RSOC initialization from them. See Table 7. If the battery is not charged during initial sequence the maximum voltage is suitable for more accurate initial RSOC. Try all “Before RSOC” command and read RSOC (0x0D) to search the maximum voltage. The higher RSOC after the command is caused by the higher voltage.

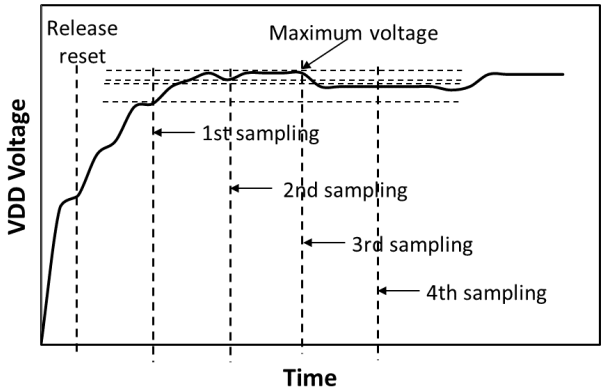

Figure 9. Sampling order for Before RSOC Command

Table 7. BEFORE RSOC COMMAND

Command Code	DATA	Sampling order of Battery Voltage for RSOC Initialization
0x04	0xAA55	1st sampling
	0xAA56	2nd sampling
	0xAA57	3rd sampling
	0xAA58	4th sampling

TimeToFull (0x05)

This register contains estimated time to full in minutes. The full is defined as the state that RSOC (0x0D) is 100%.

TSENSE1 Thermistor B (0x06)

Sets B-constant of the thermistor which is connected to TSENSE1. Refer to the specification sheet of the thermistor for the set value to use.

Initial RSOC (0x07)

The LSI can be forced to initialize RSOC by sending the Before RSOC Command (0×04 = AA55) or the Initial RSOC Command (0×07 = AA55).

The LSI initializes RSOC by the measured voltage at that time when the Initial RSOC command is written. (See Figure 10). The maximum time to initialize RSOC after the command is written is 1.5 ms.

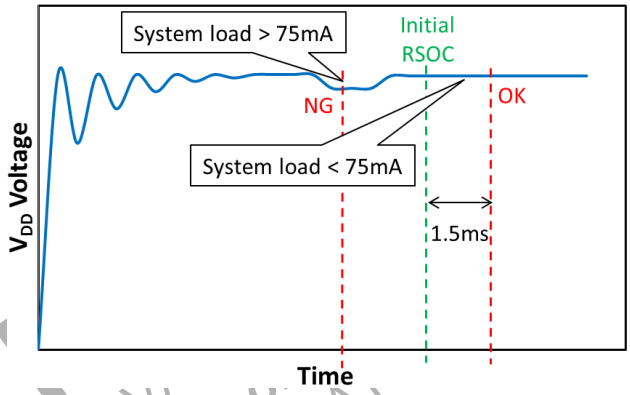

Figure 10. Initial RSOC Command

Cell Temperature (TSENSE1) (0x08)

This register contains the cell temperature from −30°C (0×0980) to +80°C (0×0DCC) measured in 0.1°C units. When Bit 0 of Status Bit (0x16) is 1 the LSI measures the attached thermistor and loads the temperature into the Cell Temperature register. For this mode, the thermistor shall be connected to the LSI as shown in Figure 1. TSENSE1 pin provides power to the thermistor and senses it. Temperature measurement timing is controlled by the LSI, and the power to the thermistor is supplied only at the time.

The Cell Temperature is used for battery measurement that includes RSOC. Then when Bit 0 of Status Bit (0x16) is 0 the application processor must input temperature of the battery to this register. Update of Cell temperature is recommended if the temperature changes more than 1°C during battery charging and discharging.

Cell Voltage (0x09)

This register contains the V_{DD} voltage in mV.

Current Direction (0x0A)

This register is used to control the reporting of RSOC. In Auto mode the RSOC is reported as it increases or decreases. In Charge mode the RSOC is not permitted to decrease. In Discharge mode the RSOC is not permitted to increase.

With consideration of capacity influence by temperature, we recommend operating in Auto because RSOC is affected

Downloaded from Arrow.com.

by the cell temperature. A warm cell has more capacity than a cold cell. Be sure not to charge in the Discharge mode and discharge in the Charge mode; it will create an error.

An example of RSOC reporting is shown in Figure 11 and Figure 12.

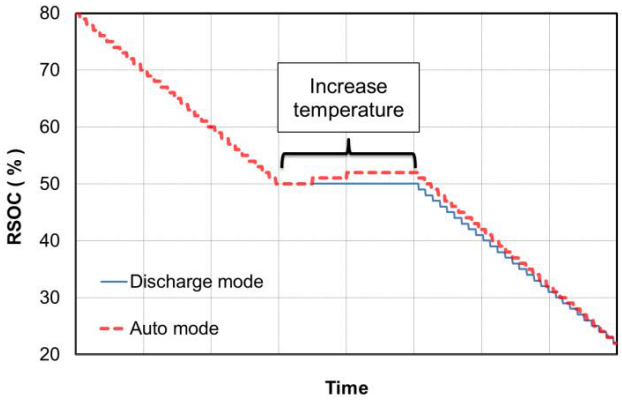

Figure 11. Discharge Mode (An example with increasing in temperature. A warm cell has more capacity than a cold cell. Therefore RSOC increases without charging in Auto mode)

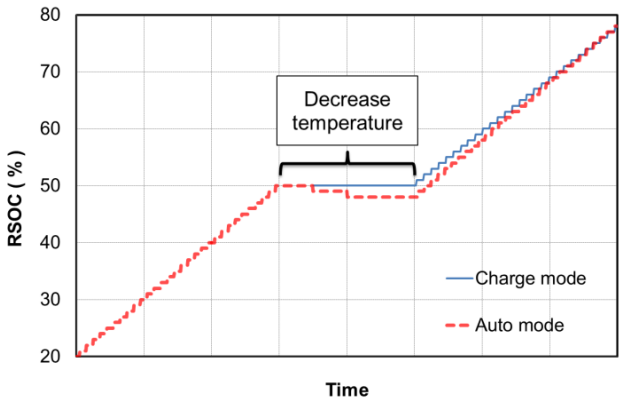

Figure 12. Charge Mode (An example with decreasing in temperature. A cold cell has less capacity than a warm cell. Therefore RSOC decreases without discharging in Auto mode)

Adjustment Pack Application (0x0B)

This register contains APA values which are parameter to fit installed battery profiles in a target battery characteristics. Appropriate APA values for the target battery will improve RSOC accuracy.

Typical APA values can be taken from the design capacity of the battery in Table 8. Table 8 shows relations of typical APA value and the design capacity. Use capacity per 1−cell for the table if some batteries are connected in parallel. Calculate APA values using linear supplement if there is not a requested design capacity in the table. See following formula.

$$\text{APAvalue} = \text{Lower_APA} + (\text{Upper_APA} - \text{Lower_APA}) \times \frac{\text{Capacity} - \text{Lower_Cap.}}{\text{Upper_Cap.} - \text{Lower_Cap.}} \quad \text{(eq. 1)}$$

Calculation example in case 1500 mAh battery Type−01:

$$\text{APAvalue} = 45{:}0\text{x}2\text{D} + (50{:}0\text{x}3\text{A} - 45{:}0\text{x}2\text{D}) \times \frac{1500 - 1000}{2000 - 1000} = 52{:}0\text{x}34$$

The upper 8−bits and the lower 8−bits of APA register are for charging and discharging adjustment parameters each. See Table 9. Table 8 shows them as the same value. For example the set value in APA register is 0x0D0D for 0x0D APA value.

But RSOC accuracy may be improved by setting different values each depending on the target battery characteristics.

Please contact **onsemi** if you don't satisfy the RSOC accuracy. The deeper adjustment of APA value may improve the accuracy.

Table 8. TYPICAL APA VALUE FOR CHARGING AND DISCHARGING ADJUSTMENT

Design Capacity	APA[15:8],APA[7:0]		
	Type−01	Type−06	Type−07
50 mAh	0x13, 0x13	0x0C, 0x0C	0x03, 0x03
100 mAh	0x15, 0x15	0x0E, 0x0E	0x05, 0x05
200 mAh	0x18, 0x18	0x11, 0x11	0x07, 0x07
500 mAh	0x21, 0x21	0x17, 0x17	0x0D, 0x0D
1000 mAh	0x2D, 0x2D	0x1E, 0x1E	0x13, 0x13
2000 mAh	0x3A, 0x3A	0x28, 0x28	0x19, 0x19
3000 mAh	0x3F, 0x3F	0x30, 0x30	0x1C, 0x1C
4000 mAh	0x42, 0x42	0x34, 0x34	–
5000 mAh	0x44, 0x44	0x36, 0x36	–
6000 mAh	0x45, 0x45	0x37, 0x37	–

Design Capacity	APA[15:8], APA[7:0]	
	Type−04	Type−05
2600 mAh	0x10, 0x10	0x06, 0x06

Table 9. BIT CONFIGURATION OF APA REGISTER

BITS	Register Name
APA[15:8]	APA value for charging adjustment
APA[7:0]	APA value for discharging adjustment

Adjustment Pack Thermistor (0x0C)

This LSI will power external NTC thermistors periodically to measure CELL and AMBIENT temperature. Internal pull−up resistors of TSENSE1 and TSENSE2 turn

DISCONTINUED
THIS DOCUMENT IS NOT AVAILABLE
PLEASE CONTACT YOUR onsemi
REPRESENTATIVE FOR INFORMATION

Downloaded from Arrow.com.

on for the charging. This register contains the delay time from the turn−on to the temperature measurement. The delay time is calculated by following formula.

$$\text{Delay} = 0.167\ \mu\text{s} \times (200 + \text{APT}) \quad \text{(eq. 2)}$$

The both of TSENSE1 and TSENSE2 resistors turn on at the same time. See Figure 13 about the delay and waveform. The default APT (0x001E) will meet most of circuits where a capacitor as shown in Figure 14 is not placed. This will delay the measurement with this register if there is a capacitor in target battery pack.

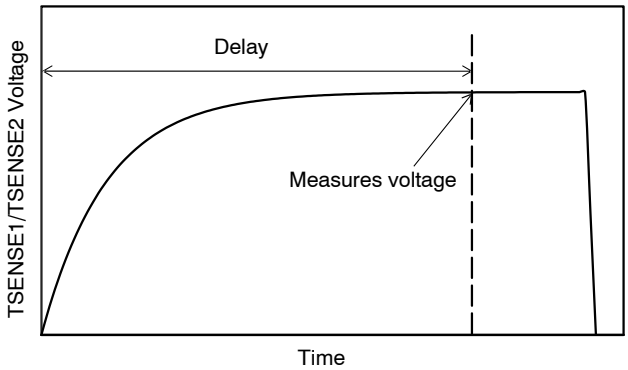

Figure 13. Example of TSENSE1 and TSENSE2 Voltage at Temperature Measurement

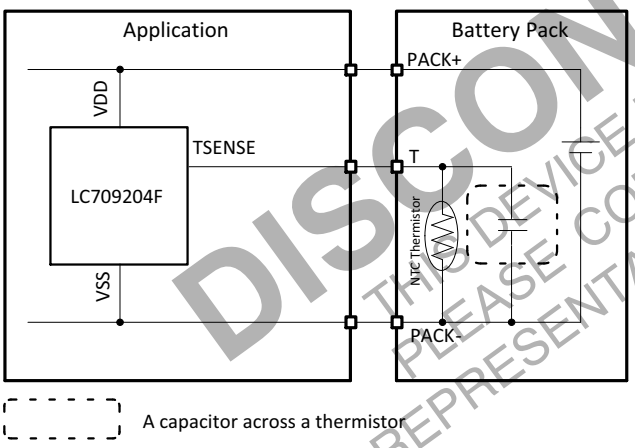

Figure 14. An Example of a Capacitor Across the Thermistor

RSOC (0x0D)

This register contains rescaled RSOC in 1%. It is same as ITE (0x0F) when Termination current rate (0x1C) and Empty Cell Voltage (0x1D) are default values.

When this register is written in Operational mode the data may be updated by following two behaviors of the LSI. One is the automatic convergence to close RSOC to actual value of a battery. The other is rescaling. Set Sleep mode to keep the data. Writing to this register is not necessary in normal operation. ITE (0x0F) will be updated with the writing too.

TSENSE2 Thermistor B (0x0E)

Sets B−constant of the thermistor which is connected to TSENSE2. Refer to the specification sheet of the thermistor for the set value to use.

Indicator to Empty (0x0F)

This register contains RSOC in 0.1%.

IC Version (0x11)

This register contains an internal management code. The value is not published.

Change of the Parameter (0x12)

The LSI contains five type battery profiles. This register can select a target battery profile from them. See Table 10. Nominal/rated voltage or charging voltage of the target battery support to determine which battery profile shall be used.

In addition to the selection this command initializes RSOC using the selected battery profile and the 1st sampled voltage during initial sequence. Refer to Before RSOC (0x04) section about the voltage.

Alarm Low RSOC (0x13)

The ALARMB pin will output low level and the bit 9 of BatteryStatus register (0x19) will be set to 1 when RSOC (0x0D) falls below this value. ALARMB pin will be released from low when RSOC value rises than this value. But the bit 9 keeps 1 until it is written or Power−on reset. Set this register to 0 to disable. Figure 15.

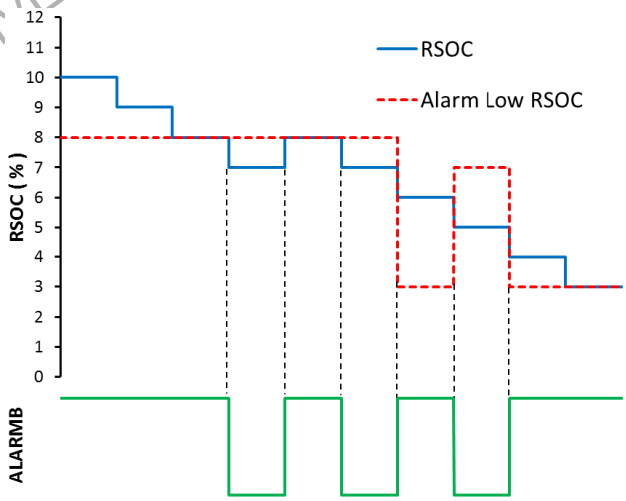

Figure 15. Alarm Low RSOC

DISCONTINUED
THIS DEVICE IS NOT AVAILABLE
PLEASE CONTACT YOUR onsemi
REPRESENTATIVE FOR INFORMATION

Downloaded from Arrow.com.

Table 10. BATTERY PROFILE VS. REGISTER

IC Type	Battery Type	Nominal / Rated Voltage	Charging Voltage	Number of the Parameter (0x1A)	Change of the Parameter (0x12)
LC709204FXE−01TBG	01	3.7 V	4.2 V	0x1001	0x00
	04	UR18650ZY (Panasonic)			0x01
	05	ICR18650−26H (SAMSUNG)			0x02
	06	3.8 V	4.35 V		0x03
	07	3.85V	4.4V		0x04

Alarm Low Cell Voltage (0x14)

The ALARMB pin will output low level and the bit 11 of BatteryStatus register (0x19) will be set to 1 if Cell Voltage (0x09) falls below this value. ALARMB pin will be released from low if VDD rises than this value. But the bit 11 keeps 1 until it is written or Power−on reset. Set this register to 0 to disable. Figure 16.

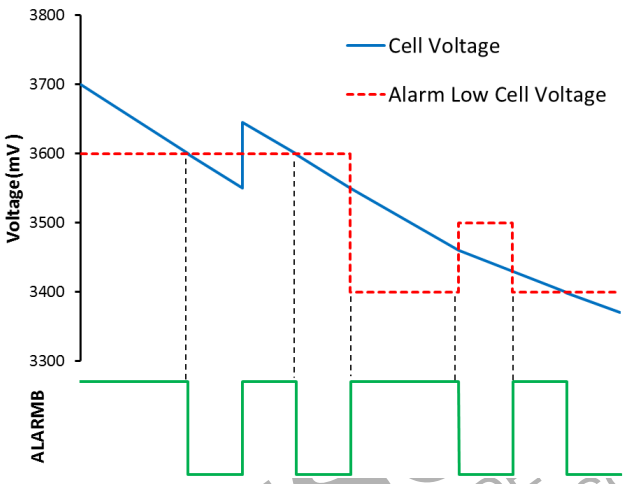

Figure 16. Alarm Low Cell Voltage

IC Power Mode (0x15)

The LSI has two power modes. Operational mode (0x15 = 01) or Sleep mode (0x15 = 02). In the Operational mode all functions operate with full calculation and tracking of RSOC during charge and discharge. In the Sleep mode only I^2C communication functions is enable and ALARMB pin is released from low. When it is switched from Sleep mode to Operational mode RSOC calculation is continued by using the data which was measured in the previous Operational mode.

Status Bit (0x16)

This register controls temperature measurement with external thermistors. Bit 0 of this register controls TSENSE1 thermistor and bit 1 controls TSENSE2. When the bits are set to 1 the LSI measures temperature with the attached thermistor and loads the temperature into the Cell Temperature or Ambient Temperature register. When the bits are set to 0 the LSI stops the measurement.

CycleCount (0x17)

This register contains the number of charging and discharging cycles of a battery. The cycle is counted as “1” when the total decrement of RSOC reaches 100%. The count is started with 0 after battery insertion. Figure 17.

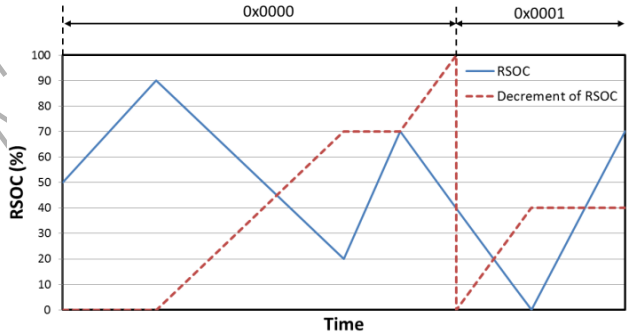

Figure 17. CycleCount

DISCONTINUED
THIS DOCUMENT IS NOT AVAILABLE
PLEASE CONTACT YOUR onsemi
REPRESENTATIVE FOR INFORMATION

Downloaded from Arrow.com.

BatteryStatus (0x19)

This register contains different alarm and estimated states of the battery. See Table 11. Each alarm bit is set to 1 when each alarm condition is satisfied. The bits which are set to 1 once will keep 1 even if the alarm conditions are resolved. Set the alarm bits to 0 after having confirmed the cause of the alarm.

Status bit 6 that is Discharging reports estimated state of the battery. It means that a battery is discharged for 1 and charged for 0.

Status bit 7 that is INITIALIZED helps that an application processor detects the power−on reset of LSI on battery insertion. The bit is set to 1 after power−on reset. Then the processor can detect the power−on reset if it has set the bit to 0 after previous power−on reset.

Table 11. BATTERY STATUS

	BIT	Function	ALARMB control	Initial value
ALARM	15	High Cell Voltage	✓	0
	14	Reserved	–	0
	13	Reserved	–	0
	12	High Temperature	✓	0
	11	Low Cell Voltage	✓	0
	10	Reserved	–	0
	9	Low RSOC	✓	0
	8	Low Temperature	✓	0
STATUS	7	INITIALIZED	–	1
	6	Discharging	–	1
	5	Reserved	–	0
	4	Reserved	–	0
	3	Reserved	–	0
	2	Reserved	–	0
	1	Reserved	–	0
	0	Reserved	–	0

Number of the Parameter (0x1A)

The register contains identity of installed battery profile.

Termination Current Rate (0x1C)

Set the termination current rate in charging when RSOC (0x0D) arrives at 100% in 0.01C. (i.e. the set value is 0x02 for 3000mAh design capacity and 60mA termination current.) The installed battery profiles are designed so that ITE (0x0F) arrives at 0x3E8 when the battery current rate in charging decreases to 0.02C.

Therefore ITE (0x0F) and RSOC (0x0D) will arrive at the maximum value at the same time when this value is 0x02 (0.02C). The arrival of RSOC to the maximum value becomes early when this value exceeds 0x02. This register produces an offset between ITE and RSOC on full charge side. See Figure 19. This offset value is calculated according to battery profile and this register value.

Empty Cell Voltage (0x1D)

Set the minimum battery voltage when RSOC is 0% in mV. When this LSI detects that Cell Voltage (0x09) is lower than Empty Cell Voltage (0x1D) it will set the ITE (0x0F) value of the moment to ITE Offset (0x1E) automatically. See Figure 18. RSOC (0x0D) is rescaled so that it is 0% when ITE (0x0F) is equal to ITE Offset (0x1E). Following formulas indicate the update conditions of ITE Offset (0x1E).

Cell Voltage (0x09) < Empty Cell Voltage (0x1D) (eq. 3)

ITE (0x0F) > ITE Offset (0x1E) (eq. 4)

Cell Temperature (0x08) > 0x0AAC(0 °C) (eq. 5)

Set this register to 0 not to update ITE Offset (0x1E) automatically.

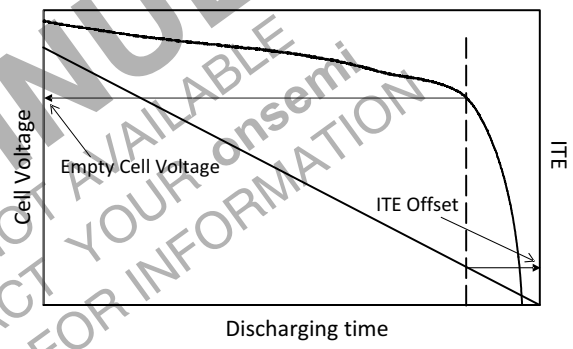

Figure 18. Empty Cell Voltage and ITE Offset in Discharging

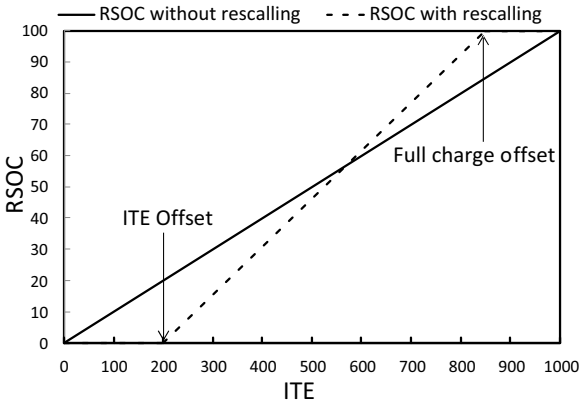

Figure 19. Rescaled RSOC by ITE Offset and Termination Current Rate

DISCONTINUED
THIS DEVICE IS NOT AVAILABLE
PLEASE CONTACT YOUR onsemi
REPRESENTATIVE FOR INFORMATION

Downloaded from Arrow.com.

ITE Offset (0x1E)

This register is referred to transform ITE (0x0F) to RSOC (0x0D). RSOC will be rescaled so that it is 0% when ITE (0x0F) is equal to this register. See Figure 19. Refer to Termination current rate section about the Full charge offset in the figure.

There are two methods to update this register. One is to write it directly. The other is an automatic update by Empty Cell Voltage (0x1D). Refer to Empty Cell Voltage section about it.

Alarm High Cell Voltage (0x1F)

The ALARMB pin will output low level and the bit 15 of BatteryStatus register (0x19) register will be set to 1 when Cell Voltage (0x09) rises than this value. ALARMB pin will be released from low when Cell Voltage falls below this value. But the bit 15 keeps 1 until it is written or Power−on reset. Set this register to 0 to disable.

Alarm Low Temperature (0x20)

The ALARMB pin will output low level and the bit 8 of BatteryStatus register (0x19) will be set to 1 when Cell Temperature (0x08) falls below this value. ALARMB pin will be released from low when Cell Temperature rises than this value. But the bit 8 keeps 1 until it is written or Power−on reset. Set this register or Bit 0 of Status Bit (0x16)to 0 to disable.

Alarm High Temperature (0x21)

The ALARMB pin will output low level and the bit 12 of BatteryStatus register (0x19) will be set to 1 when Cell Temperature (0x18) rises than this value. ALARMB pin will be released from low when Cell Temperature falls below this value. But the bit 12 keeps 1 until it is written or Power−on reset. Set this register or Bit 0 of Status Bit (0x16) to 0 to disable.

TotalRuntime (0x24, 0x25)

This register contains an elapsed time of Operational mode after battery insertion in minutes. The LSI stops the counting when it reaches 0xFFFFFF. When this register is written it starts counting from the written value. It doesn't count in Sleep mode.

Accumulated Temperature (0x26, 0x27)

In Operational mode this register accumulates Cell Temperature (0x08) value per minute. It stops the accumulating when it reaches 0xFFFFFFFF. When this register is written it starts accumulating from the written value. It doesn't count in Sleep mode.

Accumulated RSOC (0x28, 0x29)

In Operational mode this register accumulates RSOC (0x0D) value per minute. It stops the accumulating when it reaches 0xFFFFFFFF. When this register is written it starts accumulating from the written value. It doesn't count in Sleep mode.

Maximum Cell Voltage (0x2A)

The maximum Cell Voltage (0x09) is stored. This register will be updated whenever the higher voltage is detected. If the lower voltage is written it can detect the higher voltage than the written voltage again.

Minimum Cell Voltage (0x2B)

The minimum Cell Voltage (0x09) is stored. This register will be updated whenever the lower voltage is detected. If the higher voltage is written it can detect the lower voltage than the written voltage again.

Maximum Cell Temperature (TSENSE1) (0x2C)

The maximum Cell Temperature (0x08) is stored. This register will be updated whenever the higher temperature is detected. If the lower temperature is written it can detect the higher temperature than the written temperature again.

Minimum Cell Temperature (TSENSE1) (0x2D)

The minimum Cell Temperature (0x08) is stored. This register will be updated whenever the lower temperature is detected. If the higher temperature is written it can detect the lower temperature than the written temperature again.

Ambient Temperature (TSENSE2) (0x30)

This register contains the ambient temperature from −30°C (0×0980) to +80°C (0×0DCC) measured in 0.1°C units. When Bit 1 of Status Bit (0x16) is 1 the LSI measures the attached thermistor and loads the temperature into the Ambient Temperature register. The operation is the same as TSENSE1.

Ambient Temperature is not used for battery gauging. Therefore a temperature measurement of any place is possible.

State of Health (0x32)

This register contains State of Health of a battery in 1% unit. After the battery insertion, this register is started at 100%. It decreases by deterioration of the battery.

User ID (0x36, 0x37)

This register contains 32bits data written in built−in NVM. It is usable for various purposes. Refer to an application note about how to write the NVM.

HG−CVR2

Hybrid Gauging by Current-Voltage Tracking with Internal Resistance

HG−CVR2 is **onsemi**'s unique method which is used to calculate accurate RSOC. **HG−CVR2** first measures battery voltage and temperature. Precise reference voltage is essential for accurate voltage measurement. LC709204F has accurate internal reference voltage circuit with little temperature dependency.

It also uses the measured battery voltage and internal impedance and Open Circuit Voltage (OCV) of a battery for

DISCONTINUED
THIS DEVICE IS NOT AVAILABLE
PLEASE CONTACT YOUR onsemi
REPRESENTATIVE FOR INFORMATION

Downloaded from Arrow.com.

the current measurement. OCV is battery voltage without load current. The measured battery voltage is separated into OCV and varied voltage by load current. The varied voltage is the product of load current and internal impedance. Then the current is determined by the following formulas.

$$V(VARIED) = V(MEASURED) - OCV \qquad \text{(eq. 6.)}$$

$$I = \frac{V(VARIED)}{R(INTERNAL)} \qquad \text{(eq. 7.)}$$

Where *V(VARIED) i*s varied voltage by load current, *V(MEASURED)* is measured voltage, *R(INTERNAL)* is internal impedance of a battery. Detailed information about the internal impedance and OCV is installed in the LSI. The internal impedance is affected by remaining capacity, load-current, temperature, and more. Then the LSI has the information as look up table. **HG−CVR2** accumulates battery coulomb using the information of the current and a steady period by a high accuracy internal timer. The remaining capacity of a battery is calculated with the accumulated coulomb.

How to Identify Aging

By repeating discharge/charge, internal impedance of a battery will gradually increase, and the Full Charge Capacity (FCC) will decrease. In coulomb counting method RSOC is generally calculated using the FCC and the Remaining Capacity (RM).

$$RSOC = \frac{RM}{FCC} \times 100\% \qquad \text{(eq. 8.)}$$

Then the decreased FCC must be preliminarily measured with learning cycle. But **HG−CVR2** can measure the RSOC of deteriorated battery without learning cycle. The internal battery impedance that **HG−CVR2** uses to calculate the current correlates highly with FCC. The correlation is based on battery chemistry. The RSOC that this LSI reports using the correlation is not affected by aging.

Automatic Convergence of the Error

A problem of coulomb counting method is the fact that the error is accumulated over time − This error must be corrected. The general gauges using coulomb counting method must find an opportunity to correct it.

This LSI with **HG−CVR2** has the feature that the error of RSOC converges autonomously, and doesn't require calibration opportunities. The error constantly converges in the value estimated from the Open Circuit Voltage. Figure 20 shows the convergent characteristic example from the initialize error.

Also, coulomb counting method cannot detect accurate residual change because the amount of the current from self-discharge is too small but **HG−CVR2** is capable to deal with such detection by using the voltage information.

Simple and Quick Setup

In general, it is necessary to obtain multiple parameters for a fuel gauge and it takes a lot of resource and additional development time of the users. One of the unique features of LC709204F is very small number of parameters to be prepared by the beginning of battery measurement − the minimum amount of parameter which users may make is one because Adjustment pack application register has to have one. Such simple and quick start-up is realized by having multiple profile data in the LSI to support various types of batteries. Please contact your local sales office to learn more information on how to measure a battery that cannot use already-prepared profile data.

Low Power Consumption

Low power consumption of 2.0 μA is realized in the Operation mode. This LSI monitors charge/discharge condition of a battery and changes the sampling rate according to its change of current. Power consumption reduction without deteriorating its RSOC accuracy was enabled by utilizing this method.

DISCONTINUED
THIS DEVICE IS NOT AVAILABLE
PLEASE CONTACT YOUR onsemi
REPRESENTATIVE FOR INFORMATION

Downloaded from Arrow.com.

TYPICAL CHARACTERISTICS

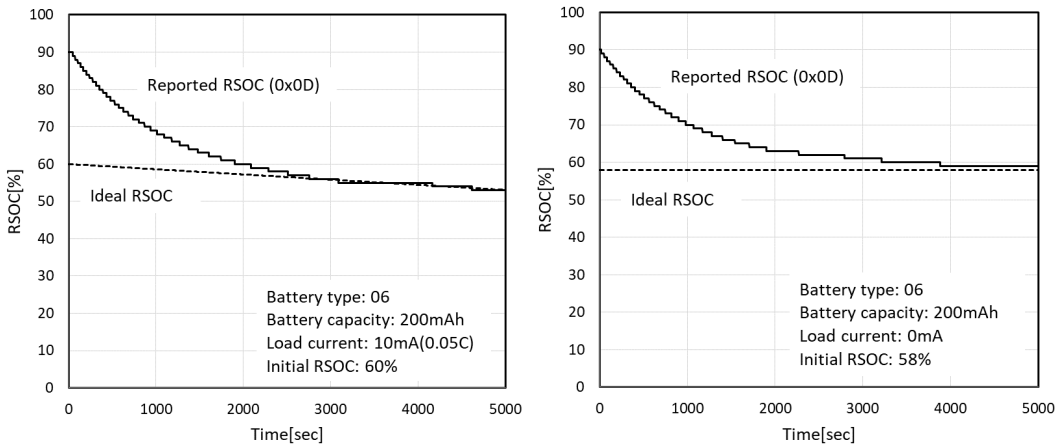

NOTE: This Graph is the example for starting point 90% (includes 30−32% error).

Figure 20. Convergent Characteristic from the Initialize Error

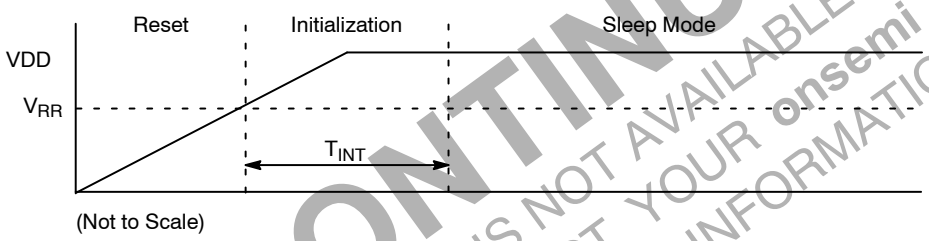

Figure 21. Power On Timing Diagram

DISCONTINUED
THIS DEVICE IS NOT AVAILABLE
PLEASE CONTACT YOUR onsemi
REPRESENTATIVE FOR INFORMATION

Power-on Reset/Battery Insertion Detection

When this LSI detects battery insertion, it is reset automatically. Once the battery voltage exceeds over the V_{RR}, it will release RESET status and will complete LSI initialization within T_{INIT} to enter into Sleep mode. All registers are initialized after Power-on reset. Then I^2C communication can be started. Figure 21.

Measurement Starting Flow

After the initialization users can start battery measurement by writing appropriate value into the registers by following the flow shown in Figure 22−23. Figure 22 shows Thermistor mode that the LSI measures battery temperature with thermistors. Figure 23 shows I^2C mode that the LSI receives battery temperature from an application processor. In the figure Mandatory settings to measure RSOC are enclosed in sold line. Optional settings to use each required function are enclosed in dotted line.

Set some mandatory or optional parameters at the beginning. RSOC (0x0D) is updated to the value corresponding to a selected battery profile after Change of the Parameter command (0x12). Then set the LSI to Operational mode. At the end of starting flow set INITIALIZED bit to 0. An application processor can detect whether the LSI was reinitialized by reading the bit. (For example, for turn−off by Lib−protection IC) Repeat this starting flow again if this bit is changed to 1.

Downloaded from Arrow.com.

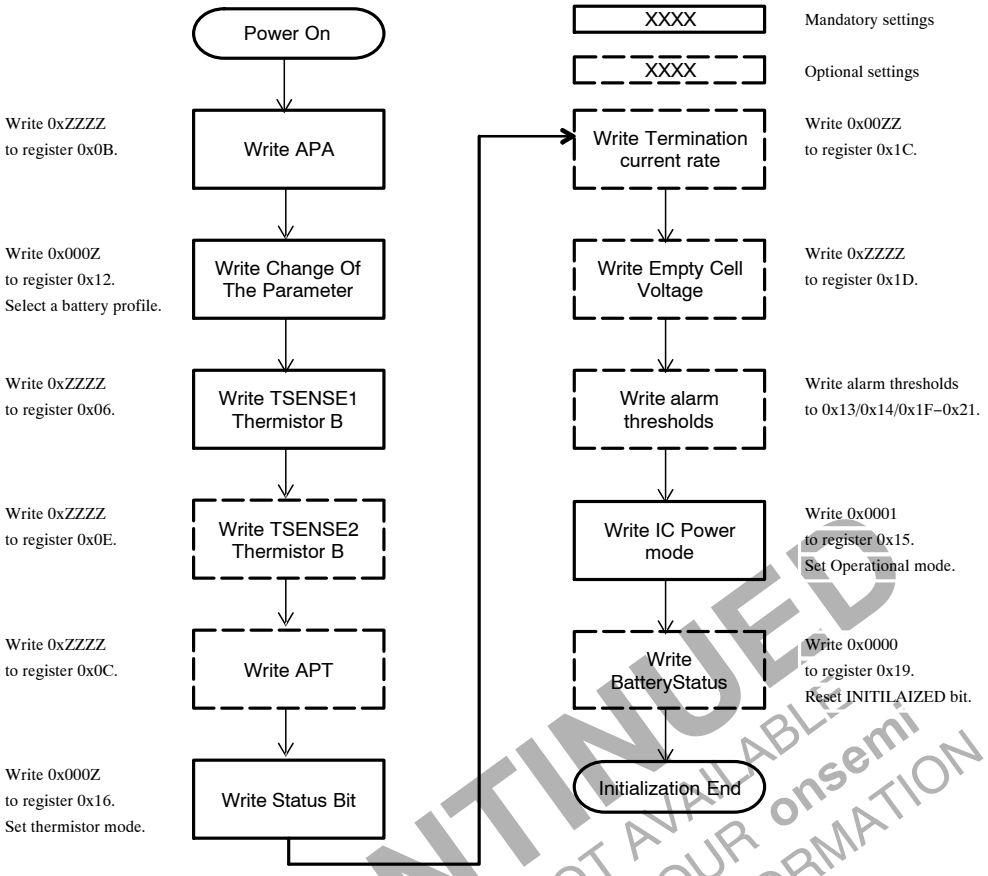

Figure 22. Starting Flow at Thermistor Mode

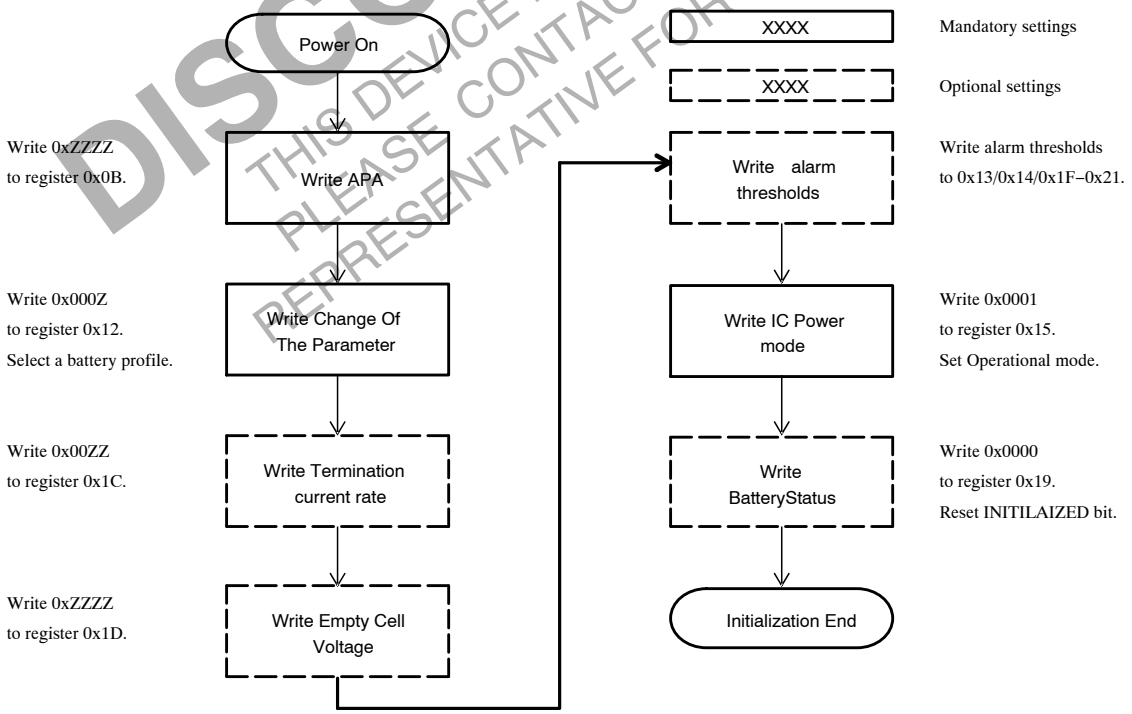

Figure 23. Starting Flow at I²C Mode

DISCONTINUED
THIS DEVICE IS NOT AVAILABLE
PLEASE CONTACT YOUR onsemi
REPRESENTATIVE FOR INFORMATION

Downloaded from Arrow.com.

Layout Guide

Figure 24 shows the recommended layout pattern around LC709204F. Place CVDD and CREG capacitor near the LSI. Short−pin with TSENSE2 and NF1 to pull out TSENSE2 is permitted.

The resistance of the Power paths between Battery or Battery Pack and the LSI affects the gauging. Place the LSI to minimize the resistance. But the resistance of the paths which is connected to only this LSI doesn't affect it.

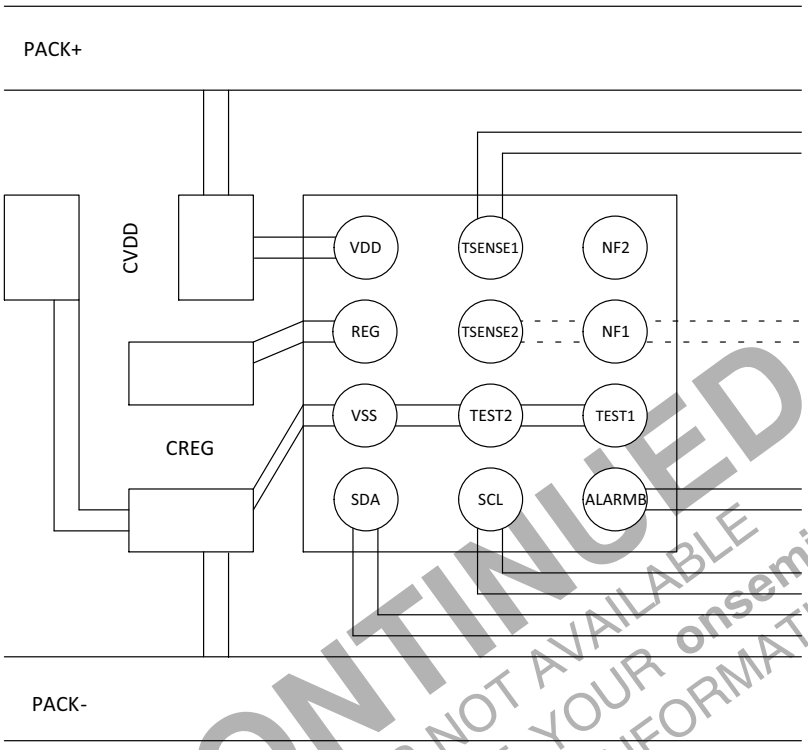

Figure 24. Layout Pattern Example Around LC709204F (Top View)

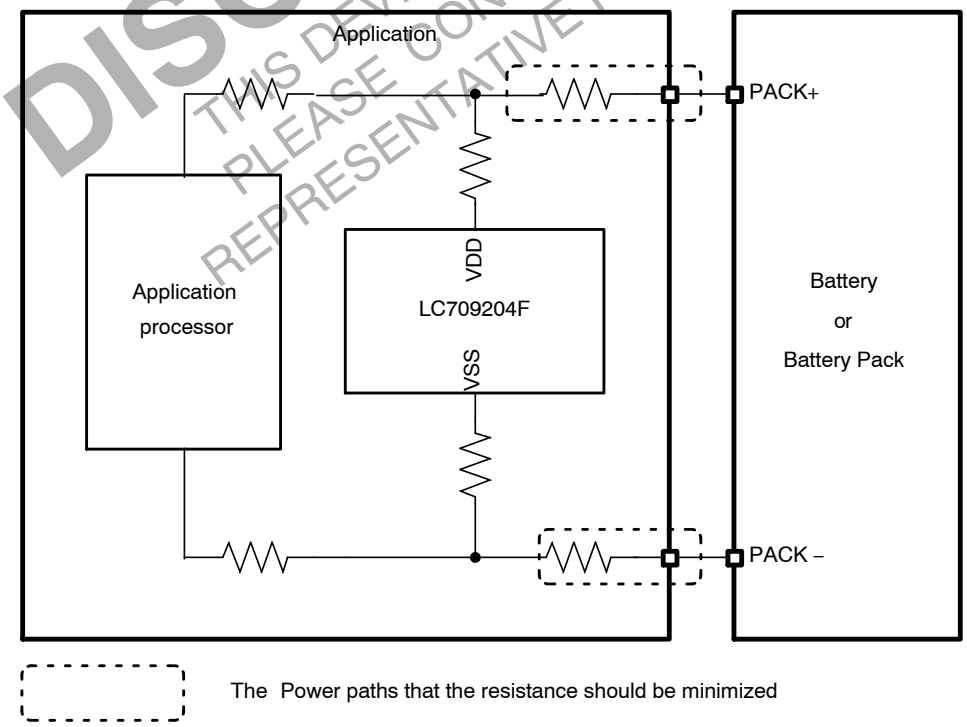

Figure 25. Position to Connect LC709204F on Power Supply Lines

DISCONTINUED
THIS DEVICE IS NOT AVAILABLE
PLEASE CONTACT YOUR onsemi
REPRESENTATIVE FOR INFORMATION

Downloaded from Arrow.com.

Table 12. ORDERING INFORMATION

Device	Package	Shipping†
LC709204FXE−01TBG	WLCSP12, 1.48x1.91x0.51 (Pb-Free / Halogen Free)	5,000 / Tape & Reel

†For information on tape and reel specifications, including part orientation and tape sizes, please refer to our Tape and Reel Packaging Specifications Brochure, BRD8011/D.

DISCONTINUED
THIS DEVICE IS NOT AVAILABLE
PLEASE CONTACT YOUR onsemi
REPRESENTATIVE FOR INFORMATION

onsemi is licensed by the Philips Corporation to carry the I^{2}C bus protocol. All other brand names and product names appearing in this document are registered trademarks or trademarks of their respective holders.

Downloaded from Arrow.com.

REVISION HISTORY

Revision	Description of Changes	Date
2	Data Sheet Discontinued.	3/9/2026

DISCONTINUED
THIS DEVICE IS NOT AVAILABLE
PLEASE CONTACT YOUR onsemi
REPRESENTATIVE FOR INFORMATION

Downloaded from Arrow.com.

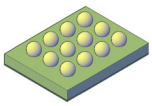

WLCSP12, 1.48x1.91x0.51
CASE 567XE
ISSUE A

DATE 22 FEB 2019

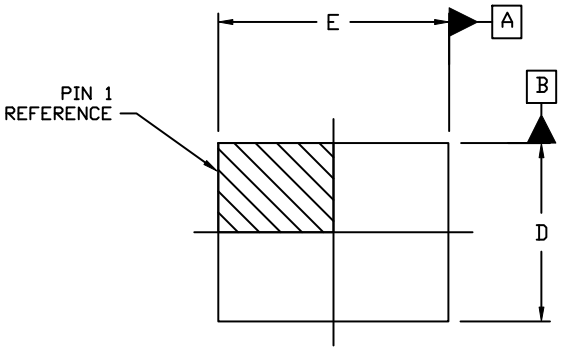

TOP VIEW

NOTES:

1. DIMENSIONING AND TOLERANCING PER ASME Y14.5M, 2009.
2. CONTROLLING DIMENSION: MILLIMETERS
3. DATUM C, THE SEATING PLANE, IS DEFINED BY THE SPERICAL CROWNS OF THE CONTACT BALLS.
4. COPLANARITY APPLIES TO THE SPHERICAL CROWNS OF THE CONTACT BALLS.
5. DIMENSION b IS MEASURED AT THE MAXIMUM CONTACT BALL DIAMETER PARALLEL TO DATUM C.

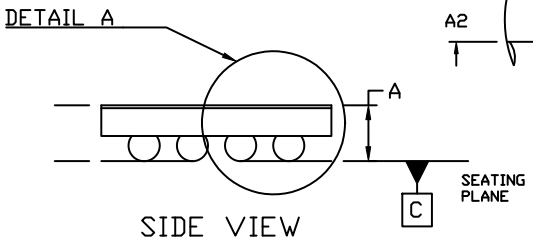

SIDE VIEW

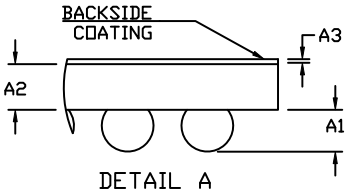

DETAIL A

DIM	MILLIMETERS		
	MIN.	NOM.	MAX.
A	---	---	0.510
A1	0.18	0.21	0.24
A2	0.245 REF		
A3	0.025 REF		
b	0.21	0.26	0.31
D	1.43	1.48	1.53
E	1.86	1.91	1.96
e	0.40 BSC		

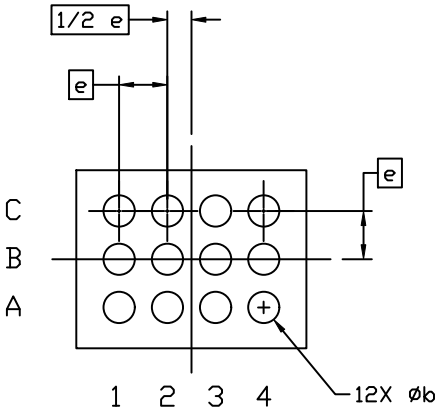

BOTTOM VIEW

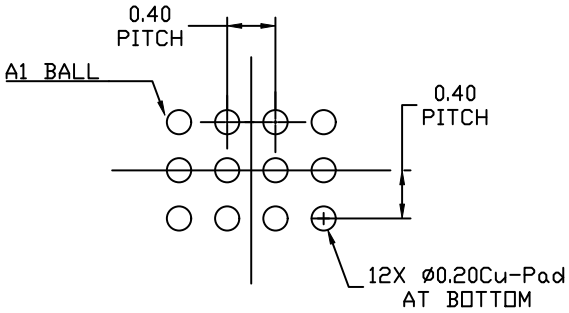

RECOMMENDED
MOUNTING FOOTPRINT*
(NSMD PAD TYPE)

* For additional information on our Pb-Free strategy and soldering details, please download the ON Semiconductor Soldering and Mounting Techniques Reference Manual, SOLDERRM/D.

GENERIC MARKING DIAGRAM*

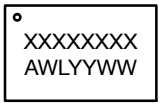

XXXX = Specific Device Code
A = Assembly Location
WL = Wafer Lot
YY = Year
WW = Work Week

*This information is generic. Please refer to device data sheet for actual part marking. Pb-Free indicator, "G" or microdot "▪", may or may not be present. Some products may not follow the Generic Marking.

DOCUMENT NUMBER:	98AON99809G	Electronic versions are uncontrolled except when accessed directly from the Document Repository. Printed versions are uncontrolled except when stamped "CONTROLLED COPY" in red.
DESCRIPTION:	WLCSP12, 1.48x1.91x0.51	PAGE 1 OF 1

onsemi and onsemi are trademarks of Semiconductor Components Industries, LLC dba **onsemi** or its subsidiaries in the United States and/or other countries. **onsemi** reserves the right to make changes without further notice to any products herein. **onsemi** makes no warranty, representation or guarantee regarding the suitability of its products for any particular purpose, nor does **onsemi** assume any liability arising out of the application or use of any product or circuit, and specifically disclaims any and all liability, including without limitation special, consequential or incidental damages. **onsemi** does not convey any license under its patent rights nor the rights of others.

© Semiconductor Components Industries, LLC, 2018

Downloaded from Arrow.com.

onsemi, onsemi, and other names, marks, and brands are registered and/or common law trademarks of Semiconductor Components Industries, LLC dba "**onsemi**" or its affiliates and/or subsidiaries in the United States and/or other countries. **onsemi** owns the rights to a number of patents, trademarks, copyrights, trade secrets, and other intellectual property. A listing of **onsemi**'s product/patent coverage may be accessed at www.onsemi.com/site/pdf/Patent−Marking.pdf. **onsemi** reserves the right to make changes at any time to any products or information herein, without notice. The information herein is provided "as−is" and **onsemi** makes no warranty, representation or guarantee regarding the accuracy of the information, product features, availability, functionality, or suitability of its products for any particular purpose, nor does **onsemi** assume any liability arising out of the application or use of any product or circuit, and specifically disclaims any and all liability, including without limitation special, consequential or incidental damages. Buyer is responsible for its products and applications using **onsemi** products, including compliance with all laws, regulations and safety requirements or standards, regardless of any support or applications information provided by **onsemi**. "Typical" parameters which may be provided in **onsemi** data sheets and/or specifications can and do vary in different applications and actual performance may vary over time. All operating parameters, including "Typicals" must be validated for each customer application by customer's technical experts. **onsemi** does not convey any license under any of its intellectual property rights nor the rights of others. **onsemi** products are not designed, intended, or authorized for use as a critical component in life support systems or any FDA Class 3 medical devices or medical devices with a same or similar classification in a foreign jurisdiction or any devices intended for implantation in the human body. Should Buyer purchase or use **onsemi** products for any such unintended or unauthorized application, Buyer shall indemnify and hold **onsemi** and its officers, employees, subsidiaries, affiliates, and distributors harmless against all claims, costs, damages, and expenses, and reasonable attorney fees arising out of, directly or indirectly, any claim of personal injury or death associated with such unintended or unauthorized use, even if such claim alleges that **onsemi** was negligent regarding the design or manufacture of the part. **onsemi** is an Equal Opportunity/Affirmative Action Employer. This literature is subject to all applicable copyright laws and is not for resale in any manner.

ADDITIONAL INFORMATION

TECHNICAL PUBLICATIONS:
Technical Library: www.onsemi.com/design/resources/technical−documentation
onsemi Website: www.onsemi.com

ONLINE SUPPORT: www.onsemi.com/support
For additional information, please contact your local Sales Representative at www.onsemi.com/support/sales

Downloaded from Arrow.com.