Features

- Compact Metal Case with Excellent Thermal Performance
- Full Power at Wide Output Current Range (Constant Power)
- Adjustable Output Current (AOC) with Programmability
- Isolated 1-5V/1-10V/10V PWM/3-Timer-Modes Dimmable
- Output Lumen Compensation
- Input Surge Protection: DM 6kV, CM 10kV
- All-Around Protection: OVP, SCP, OTP
- IP66 / IP67 and UL Dry / Damp / Wet Location
- SELV Output
- TYPE HL, for use in a Class I, Division 2 hazardous (Classified) location
- 5 Years Warranty

Description

The EUM-150SxxxDx series is a 150W, constant-current, programmable and IP66/IP67 rated LED driver that operates from 90-305Vac input with excellent power factor. It is created for many lighting applications including high bay, high mast and roadway, etc. The high efficiency of these drivers and compact metal case enables them to run cooler, significantly improving reliability and extending product life. To ensure trouble-free operation, protection is provided against input surge, output over voltage, short circuit, and over temperature.

Models

Adjustable Output Current Range	Full-Power Current Range (1)	Default Output Current	Input Voltage Range(2)	Output Voltage Range	Max. Output Power	Typical Efficiency (3)	Typical Power Factor		Model Number (5)
							120Vac	220Vac	
70-1050mA	700-1050mA	700mA	90~305 Vac/ 127~300 Vdc	72~214 Vdc	150W	93.0%	0.99	0.96	EUM-150S105Dx
105-1500mA	1050-1500mA	1050mA	90~305 Vac/ 127~300 Vdc	50~143 Vdc	150W	93.5%	0.99	0.96	EUM-150S150Dx
140-2100mA	1400-2100mA	1400mA	90~305 Vac/ 127~300 Vdc	36~107 Vdc	150W	92.0%	0.99	0.96	EUM-150S210Dx(4)
280-4200mA	2800-4200mA	3150mA	90~305 Vac/ 127~300 Vdc	18 ~ 54 Vdc	150W	91.5%	0.99	0.96	EUM-150S420Dx(4)

Notes: (1) Output current range with constant power at 150W
(2) Certified input voltage range: UL, FCC 100-277Vac; otherwise 100-240Vac.
(3) Measured at 100% load and 220Vac input (see below "General Specifications" for details).
(4) SELV output.
(5) x = G are UL Recognized, ENEC and CCC, etc. models; x = T are UL Class P models; x = B are BIS models.

Downloaded from Arrow.com.

I-V Operation Area

EUM-150S105Dx

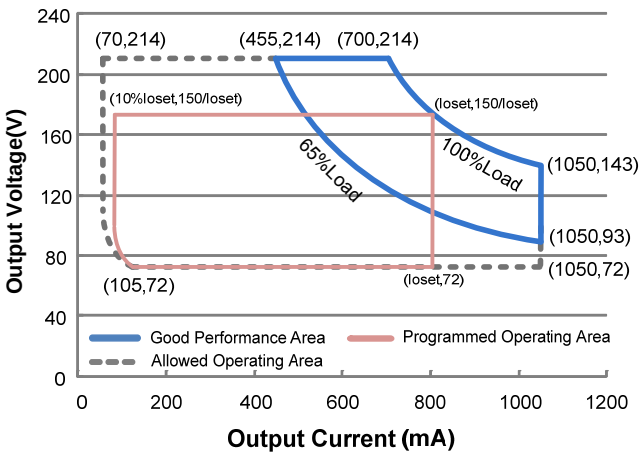

Note: 700mA≤Ioset≤1050mA

EUM-150S150Dx

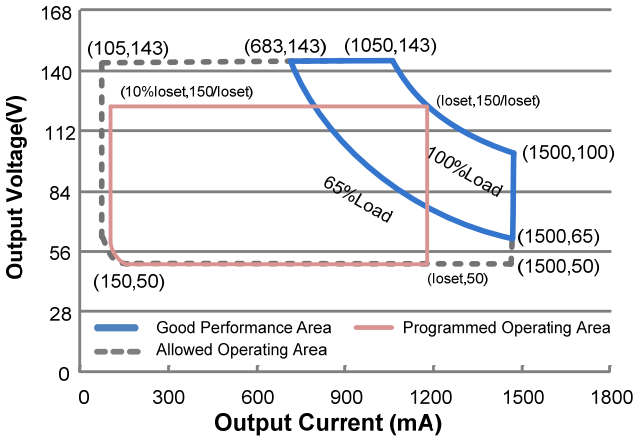

Note: 1050mA≤Ioset≤1500mA

EUM-150S210Dx

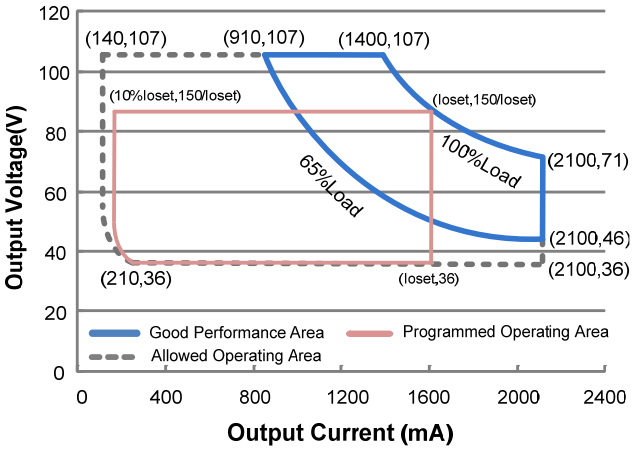

Note: 1400mA≤Ioset≤2100mA

EUM-150S420Dx

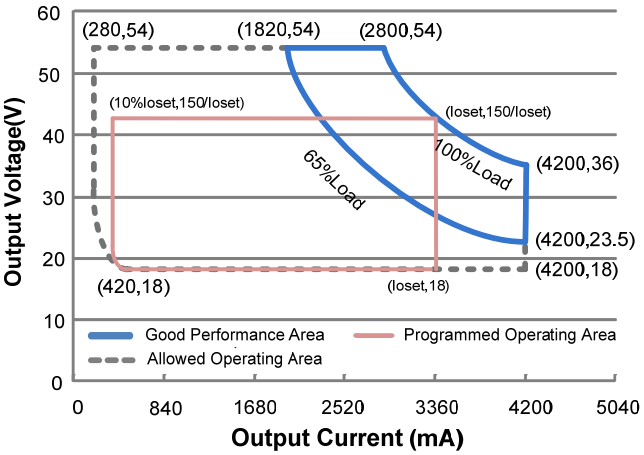

Note: 2800mA≤Ioset≤4200mA

Input Specifications

Parameter	Min.	Typ.	Max.	Notes
Input AC Voltage	90 Vac	-	305 Vac	
Input DC Voltage	127 Vdc	-	300 Vdc	
Input Frequency	47 Hz	-	63 Hz	
Leakage Current	-	-	0.75 MIU	UL8750; 277Vac/ 60Hz
	-	-	0.70 mA	IEC60598-1; 240Vac/ 60Hz,
Input AC Current	-	-	1.50 A	Measured at 100% load and 120 Vac input.
	-	-	0.80 A	Measured at 100% load and 220 Vac input.

Downloaded from Arrow.com.

Input Specifications (Continued)

Parameter	Min.	Typ.	Max.	Notes
Inrush Current(I^2t)	-	-	3.55 A^2s	At 220Vac input, 25°C cold start, duration=220 μs, 10%Ipk-10%Ipk. See Inrush Current Waveform for the details.
PF	0.9	-	-	At 100-277Vac, 50-60Hz, 65%-100% Load (97.5-150W)
THD	-	-	20%	
THD	-	-	10%	At 220-240Vac, 50-60Hz, 75%-100% Load (112.5-150W)

Output Specifications

Parameter	Min.	Typ.	Max.	Notes
Output Current Tolerance	-5%Ioset	-	5%Ioset	At 100% load condition
Output Current Setting(Ioset) Range EUM-150S105Dx EUM-150S150Dx EUM-150S210Dx EUM-150S420Dx	 70 mA 105 mA 140 mA 280 mA	 - - - -	 1050 mA 1500 mA 2100 mA 4200 mA	
Output Current Setting Range with Constant Power EUM-150S105Dx EUM-150S150Dx EUM-150S210Dx EUM-150S420Dx	 700 mA 1050 mA 1400 mA 2800 mA	 - - - -	 1050 mA 1500 mA 2100 mA 4200 mA	
Total Output Current Ripple (pk-pk)	-	5%Iomax	10%Iomax	At 100% load condition. 20 MHz BW
Output Current Ripple at < 200 Hz (pk-pk)	-	2%Iomax	-	At 100% load condition. Only this component of ripple is associated with visible flicker.
Startup Overshoot Current	-	-	10%Iomax	At 100% load condition
No Load Output Voltage EUM-150S105Dx EUM-150S150Dx EUM-150S210Dx EUM-150S420Dx	 - - - -	 - - - -	 240 V 160 V 120 V 60 V	
Line Regulation	-	-	±0.5%	Measured at 100% load
Load Regulation	-	-	±1.5%	
Turn-on Delay Time	-	-	0.5 s	Measured at 120-277Vac input, 65%-100% Load
Temperature Coefficient of Ioset	-	0.03%/°C	-	Case temperature = 0°C ~Tc max

Downloaded from Arrow.com.

General Specifications

Parameter	Min.	Typ.	Max.	Notes
Efficiency at 120 Vac input: EUM-150S105Dx Io= 700 mA Io=1050 mA EUM-150S150Dx Io=1050 mA Io=1500 mA EUM-150S210Dx Io=1400 mA Io=2100 mA EUM-150S420Dx Io=2800 mA Io=4200 mA	 88.5% 89.0% 89.0% 89.5% 87.5% 88.0% 87.0% 86.5%	 90.5% 91.0% 91.0% 91.5% 89.5% 90.0% 89.0% 88.5%	 - - - - - - - -	Measured at 100% load and steady-state temperature in 25°C ambient; (Efficiency will be about 2.0% lower if measured immediately after startup.)
Efficiency at 220 Vac input: EUM-150S105Dx Io= 700 mA Io=1050 mA EUM-150S150Dx Io=1050 mA Io=1500 mA EUM-150S210Dx Io=1400 mA Io=2100 mA EUM-150S420Dx Io=2800 mA Io=4200 mA	 90.5% 91.0% 91.0% 91.5% 89.5% 90.0% 89.5% 89.0%	 92.5% 93.0% 93.0% 93.5% 91.5% 92.0% 91.5% 91.0%	 - - - - - - - -	Measured at 100% load and steady-state temperature in 25°C ambient; (Efficiency will be about 2.0% lower if measured immediately after startup.)
Efficiency at 277 Vac input: EUM-150S105Dx Io= 700 mA Io=1050 mA EUM-150S150Dx Io=1050 mA Io=1500 mA EUM-150S210Dx Io=1400 mA Io=2100 mA EUM-150S420Dx Io=2800 mA Io=4200 mA	 91.0% 91.5% 91.5% 91.5% 90.0% 90.0% 89.5% 89.0%	 93.0% 93.5% 93.5% 93.5% 92.0% 92.0% 91.5% 91.0%	 - - - - - - - -	Measured at 100% load and steady-state temperature in 25°C ambient; (Efficiency will be about 2.0% lower if measured immediately after startup.)
MTBF	-	333,000 Hours	-	Measured at 220Vac input, 80%Load and 25°C ambient temperature (MIL-HDBK-217F)
Lifetime	-	106,000 Hours	-	Measured at 220Vac input, 80%Load and 70°C case temperature; See lifetime vs. Tc curve for the details
Operating Case Temperature for Safety Tc_s	-40°C	-	+90°C	
Operating Case Temperature for Warranty Tc_w	-40°C	-	+80°C	Case temperature for 5 years warranty Humidity: 10% RH to 95% RH;
Storage Temperature	-40°C	-	+85°C	Humidity: 5%RH to 95%RH
Dimensions Inches (L × W × H) Millimeters (L × W × H)	6.34 × 2.36 ×1.44 161 × 60 × 36.5			With mounting ear 7.01 × 2.36 ×1.44 178 × 60 × 36.5
Net Weight	-	735 g	-	

Downloaded from Arrow.com.

Dimming Specifications

Parameter		Min.	Typ.	Max.	Notes
Absolute Maximum Voltage on the Vdim (+) Pin		-20 V	-	20 V	
Source Current on Vdim (+)Pin		200 μA	300 μA	450 μA	Vdim(+) = 0 V
Dimming Output Range	EUM-150S105Dx EUM-150S150Dx EUM-150S210Dx EUM-150S420Dx	10%Ioset	-	Ioset	700 mA ≤ Ioset ≤ 1050 mA 1050 mA ≤ Ioset ≤ 1500 mA 1400 mA ≤ Ioset ≤ 2100 mA 2800 mA ≤ Ioset ≤ 4200 mA
	EUM-150S105Dx EUM-150S150Dx EUM-150S210Dx EUM-150S420Dx	70 mA 105 mA 140 mA 280 mA	-	Ioset	70 mA ≤ Ioset < 700 mA 105 mA ≤ Ioset < 1050 mA 140 mA ≤ Ioset < 1400 mA 280 mA ≤ Ioset < 2800 mA
Recommended Dimming Range for 1-5V		0.25 V	-	4.75 V	Dimming mode set to 1-5V in PC interface.
Recommended Dimming Range for 1-10V		1 V	-	9 V	Default 1-10V dimming mode with positive logic.
PWM_in High Level		-	10V	-	
PWM_in Low Level		-	0V	-	
PWM_in Frequency Range		200 Hz	-	2 KHz	
PWM_in Duty Cycle		0%	-	100%	

Safety &EMC Compliance

Safety Category	Standard
UL/CUL	UL8750,CAN/CSA-C22.2 No. 250.13
ENEC & CE	EN 61347-1, EN 61347-2-13
CB	IEC 61347-1, IEC 61347-2-13
CCC	GB 19510.1, GB 19510.14
PSE	J 61347-1, J 61347-2-13
KS	KS C 7655
BIS	IS 15885(Part2/Sec13)
EAC	ГОСТ Р МЭК 61347-1, ГОСТ IEC 61347-2-13
NOM	NOM-058-SCFI
EMI Standards	**Notes**
EN 55015/GB 17743/KN 15(1)	Conducted emission Test &Radiated emission Test
EN 61000-3-2/GB 17625.1	Harmonic current emissions
EN 61000-3-3	Voltage fluctuations & flicker

Downloaded from Arrow.com.

Safety &EMC Compliance (Continued)

EMI Standards	Notes
FCC Part 15(1)	ANSI C63.4 Class B
	This device complies with Part 15 of the FCC Rules. Operation is subject to the following two conditions: [1] this device may not cause harmful interference, and [2] this device must accept any interference received, including interference that may cause undesired Operation.
EMS Standards	**Notes**
EN 61000-4-2	Electrostatic Discharge (ESD): 8 kV air discharge, 4 kV contact discharge
EN 61000-4-3	Radio-Frequency Electromagnetic Field Susceptibility Test-RS
EN 61000-4-4	Electrical Fast Transient / Burst-EFT
EN 61000-4-5	Surge Immunity Test: AC Power Line: Differential Mode 6 kV, Common Mode 10 kV
EN 61000-4-6	Conducted Radio Frequency Disturbances Test-CS
EN 61000-4-8	Power Frequency Magnetic Field Test
EN 61000-4-11	Voltage Dips
EN 61547	Electromagnetic Immunity Requirements Applies To Lighting Equipment

Note: (1) This LED driver meets the EMI specifications above, but EMI performance of a luminaire that contains it depends also on the other devices connected to the driver and on the fixture itself.

Derating

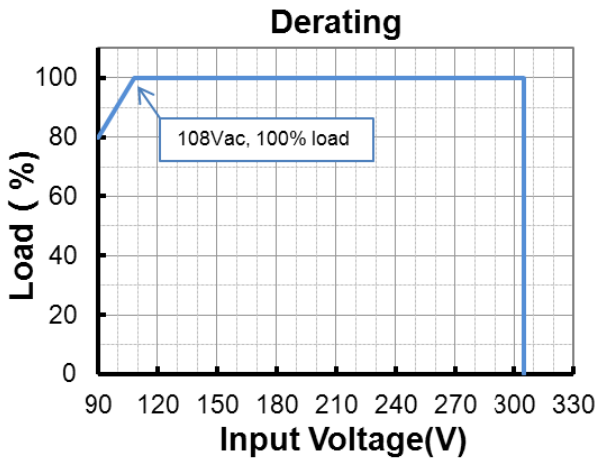

Downloaded from Arrow.com.

Lifetime vs. Case Temperature

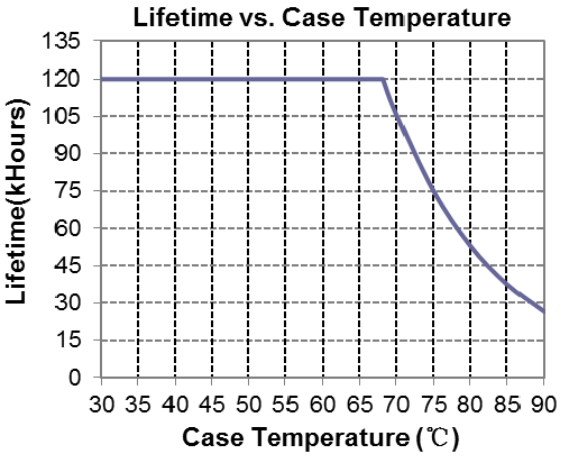

Inrush Current Waveform

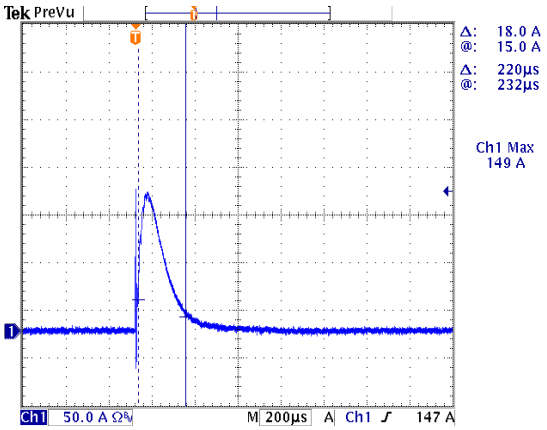

Efficiency vs. Load

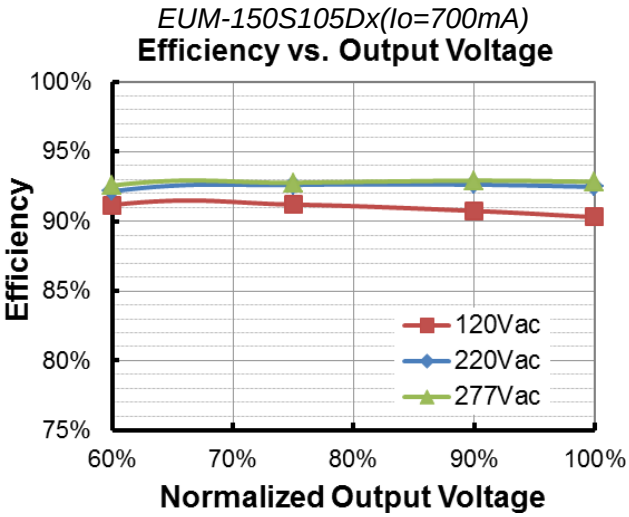

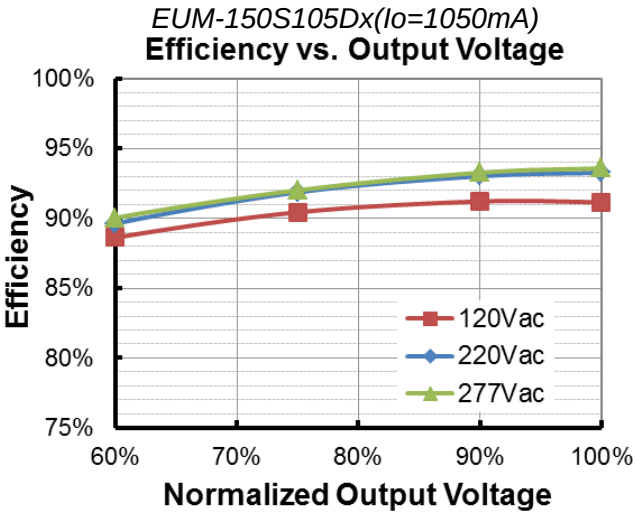

Downloaded from Arrow.com.

EUM-150S150Dx(Io=1050mA)

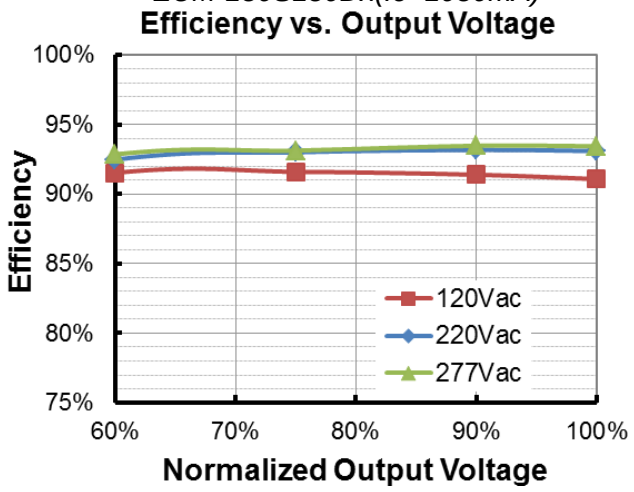

EUM-150S150Dx(Io=1500mA)

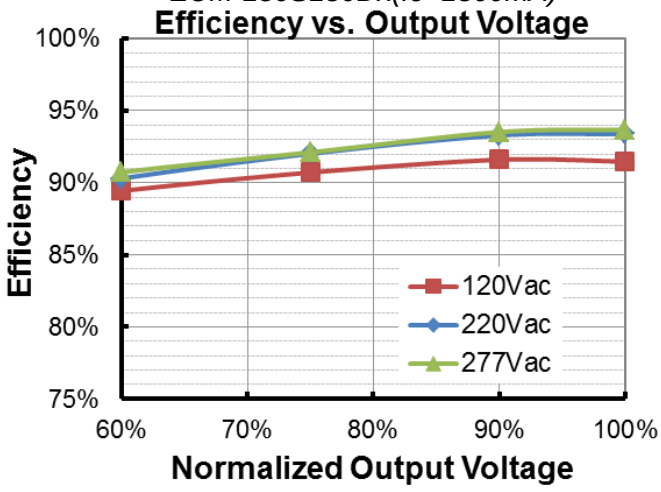

EUM-150S210Dx(Io=1400mA)

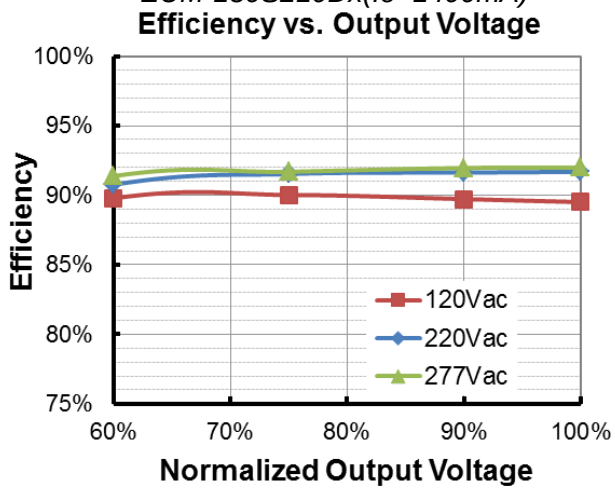

EUM-150S210Dx(Io=2100mA)

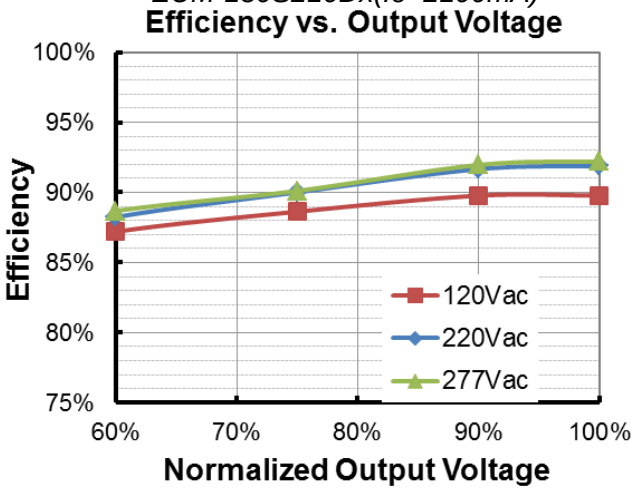

EUM-150S420Dx(Io=2800mA)

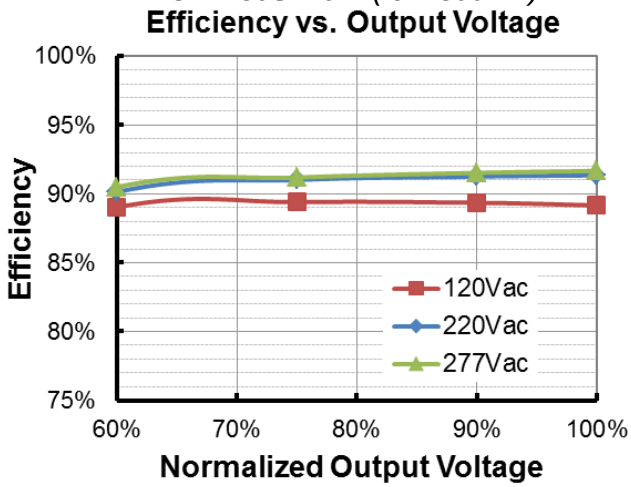

EUM-150S420Dx(Io=4200mA)

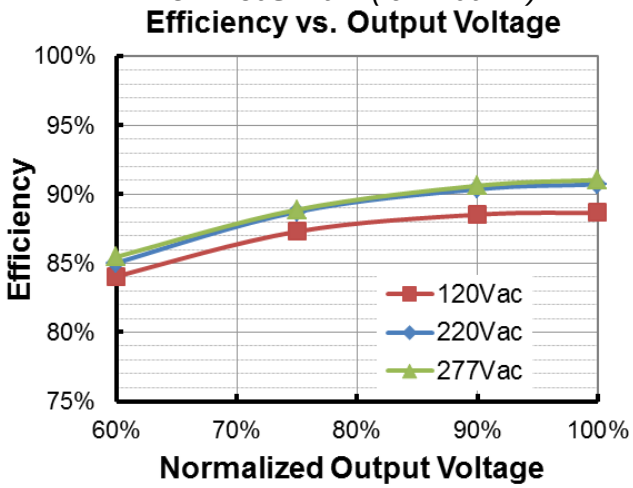

Downloaded from Arrow.com.

Power Factor

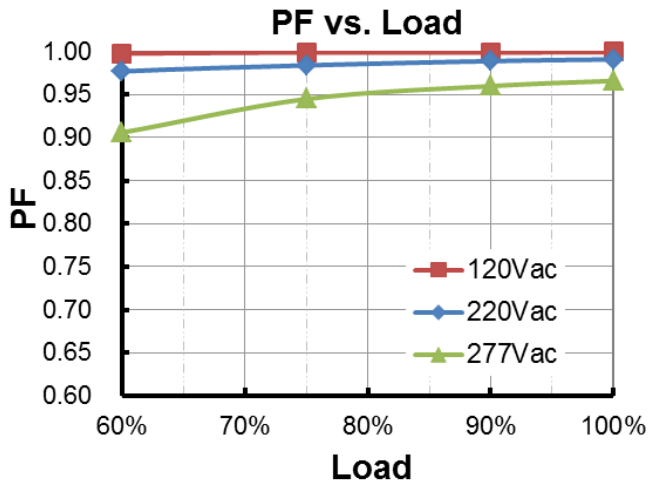

Total Harmonic Distortion

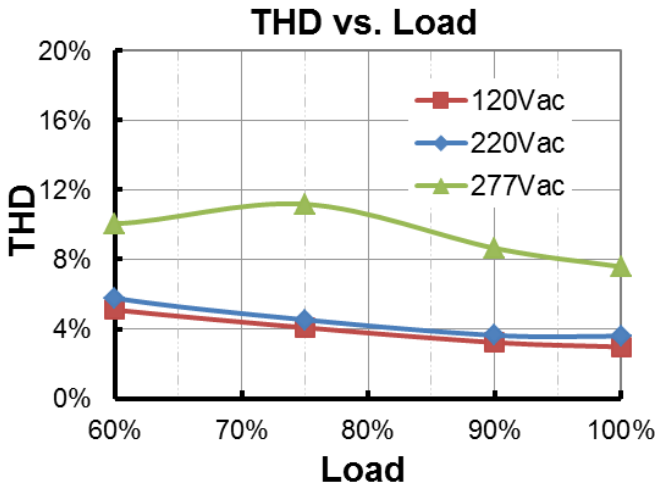

Protection Functions

Parameter	Notes
Over Temperature Protection	Decreases output current, returning to normal after over temperature is removed.
Short Circuit Protection	Auto Recovery. No damage will occur when any output is short circuited. The output shall return to normal when the fault condition is removed.
Over Voltage Protection	Limits output voltage at no load and in case the normal voltage limit fails.

Dimming

- **1-5V Dimming**

The recommended implementation of the dimming control is provided below.

Downloaded from Arrow.com.

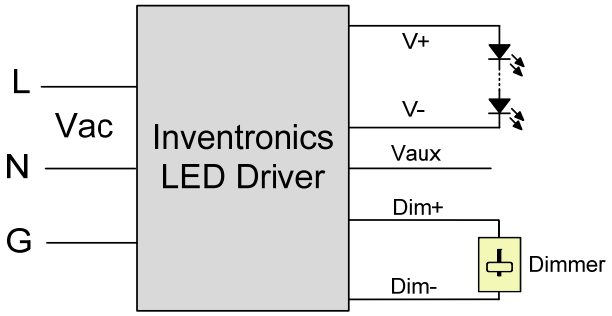

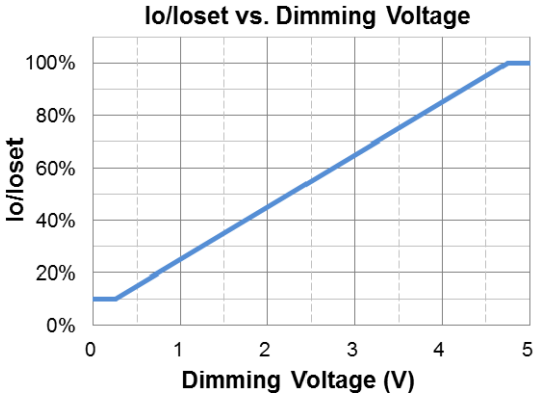

Implementation 1: Positive logic

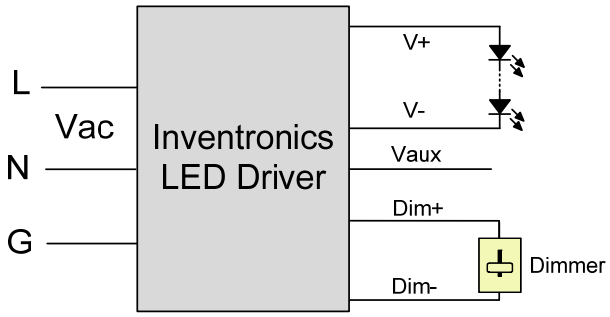

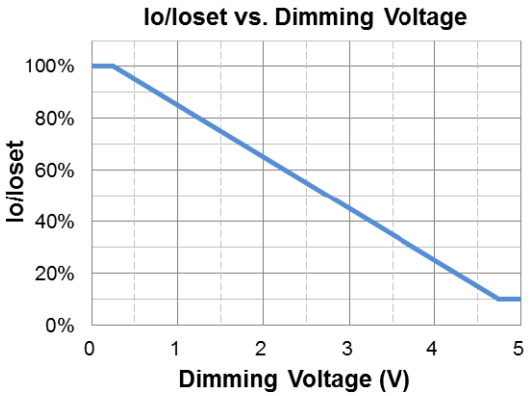

Implementation 2: Negative logic

Notes:

1. Do NOT connect Dim− to the output V− or V+, otherwise the driver will not work properly.
2. The dimmer can also be replaced by an active 1-5V voltage source signal or passive components like zener.
3. When 1-5V negative logic dimming mode and Dim+ is open, the driver will output maximum current.

● 1-10V Dimming

The recommended implementation of the dimming control is provided below.

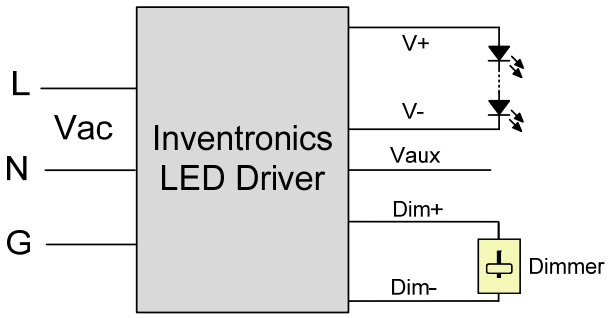

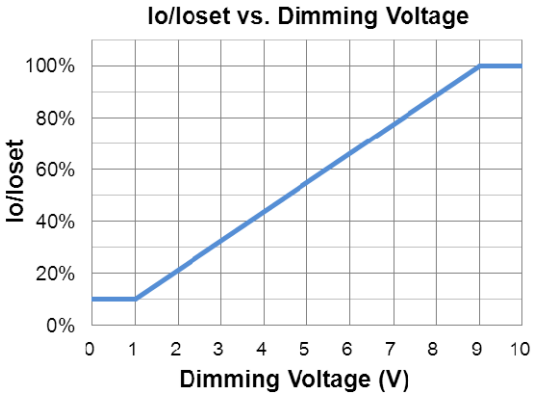

Implementation 3: Positive logic

Downloaded from Arrow.com.

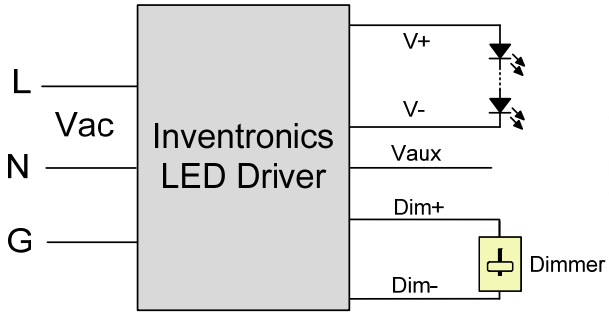

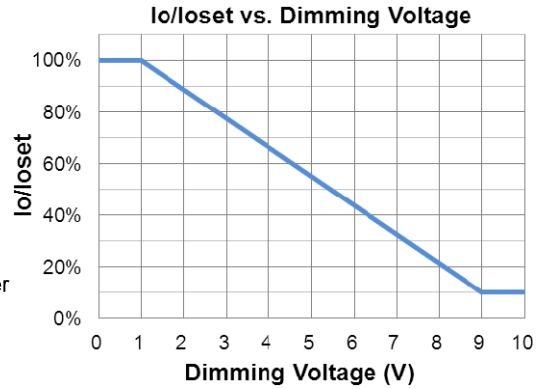

Implementation 4: Negative logic

Notes:

1. Do NOT connect Dim− to the output V− or V+, otherwise the driver will not work properly.
2. The dimmer can also be replaced by an active 1-10V voltage source signal or passive components like zener.
3. When 1-10V negative logic dimming mode and Dim+ is open, the driver will output minimum current.

● 10V PWM Dimming

The recommended implementation of the dimming control is provided below.

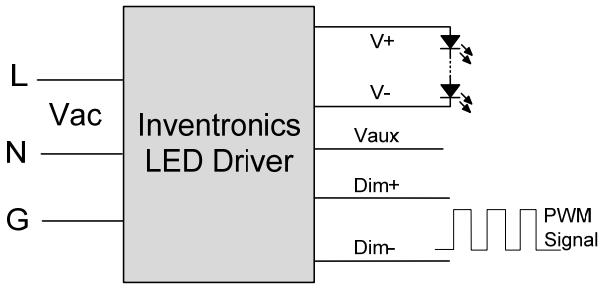

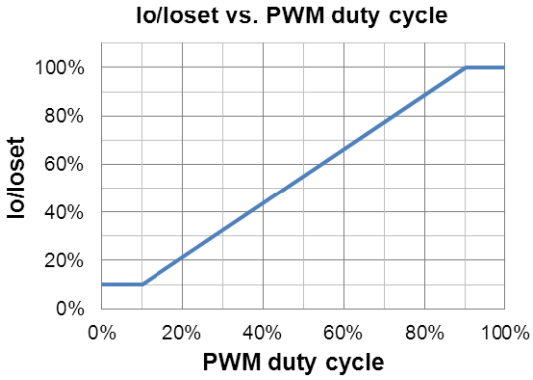

Implementation 5: Positive logic

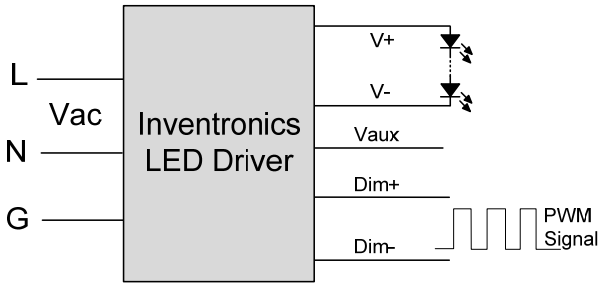

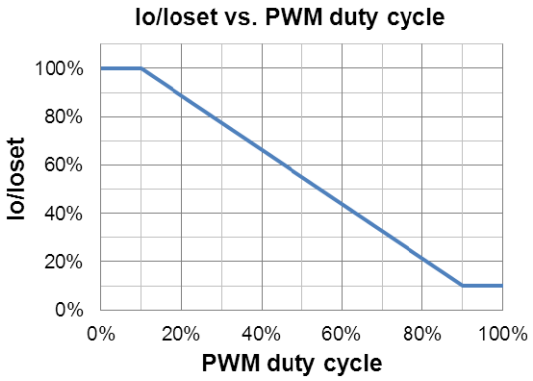

Implementation 6: Negative logic

Notes:

1. Do NOT connect Dim− to the output V− or V+, otherwise the driver will not work properly.
2. When PWM negative logic dimming mode and Dim+ is open, the driver will output minimum current.

Downloaded from Arrow.com.

- **Time Dimming**
  Time dimming control includes 3 kinds of modes, they are Self Adapting-Midnight, Self Adapting-Percentage and Traditional Timer.
  - **Self Adapting-Midnight**: Automatically adjusts the dimming curve based on the on-time of past two days (if difference <15 minutes), assuming that the center point of the dimming curve is midnight local time.
  - **Self Adapting-Percentage**: Automatically adjusts the on-time of each step by a constant percentage = (actual on-time for the past 2 days if difference <15 min) / (programmed on-time from the dimming curve).
  - **Traditional Timer**: Follows the programmed timing curve after power on with no changes.

- **Output Lumen Compensation**
  Output Lumen Compensation (OLC) may be used to maintain constant light output over the life of the LEDs by driving them at a reduced current when new, then gradually increasing the drive current over time to counteract LED lumen degradation.

Programming Connection Diagram

EUM-150SxxxDG

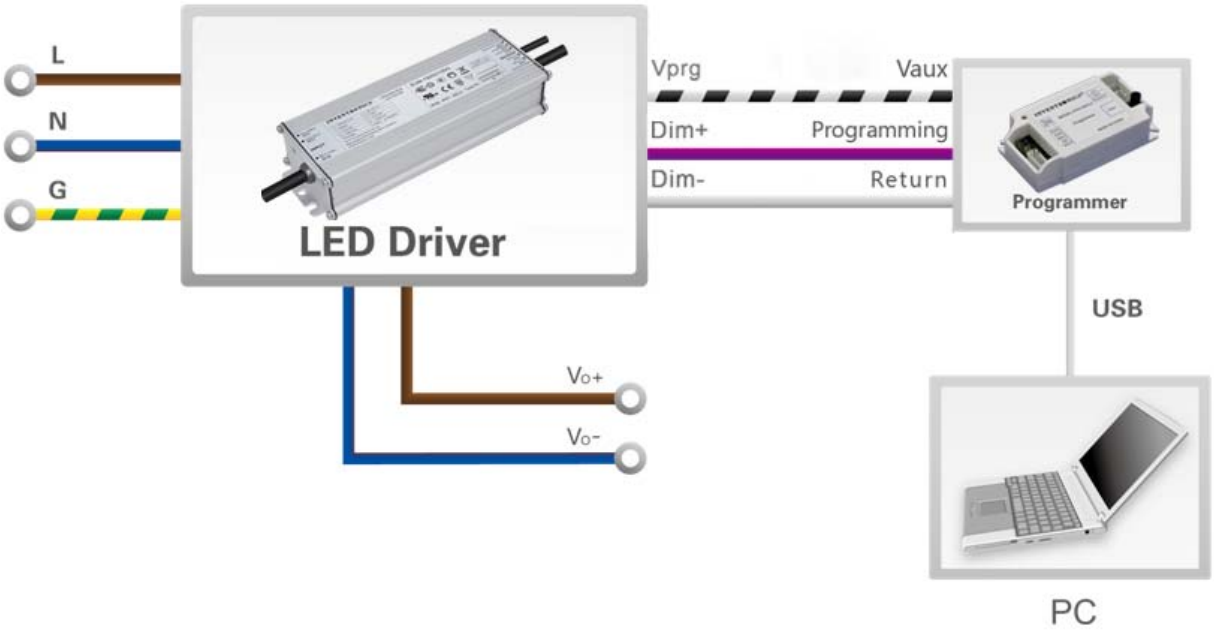

Downloaded from Arrow.com.

EUM-150SxxxDT

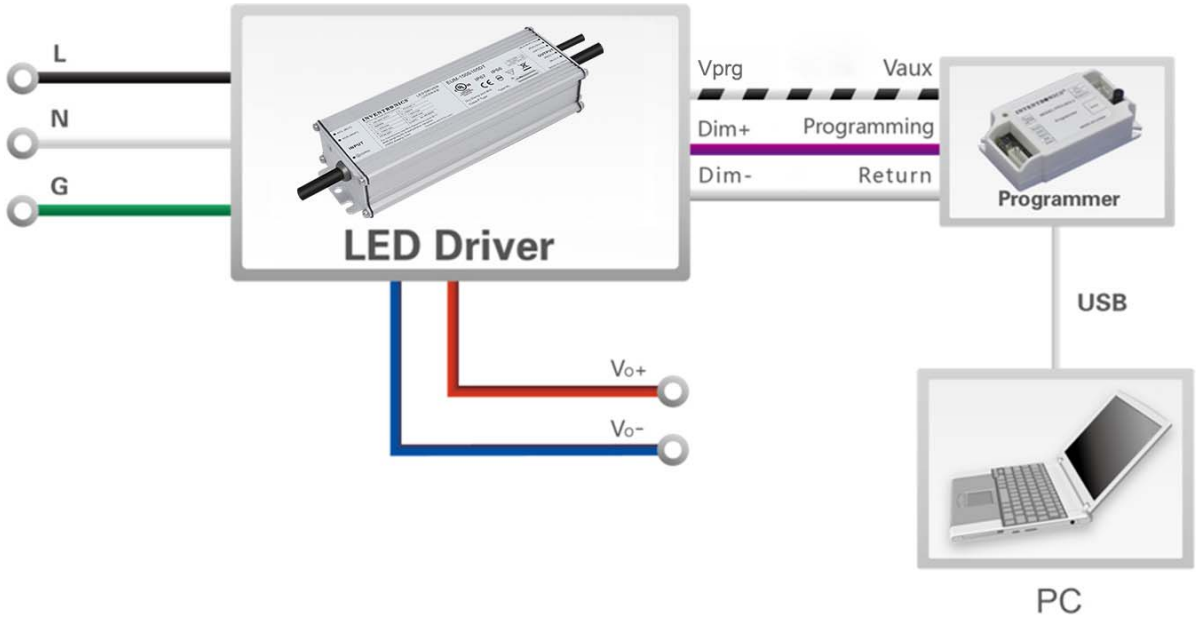

EUM-150SxxxDB

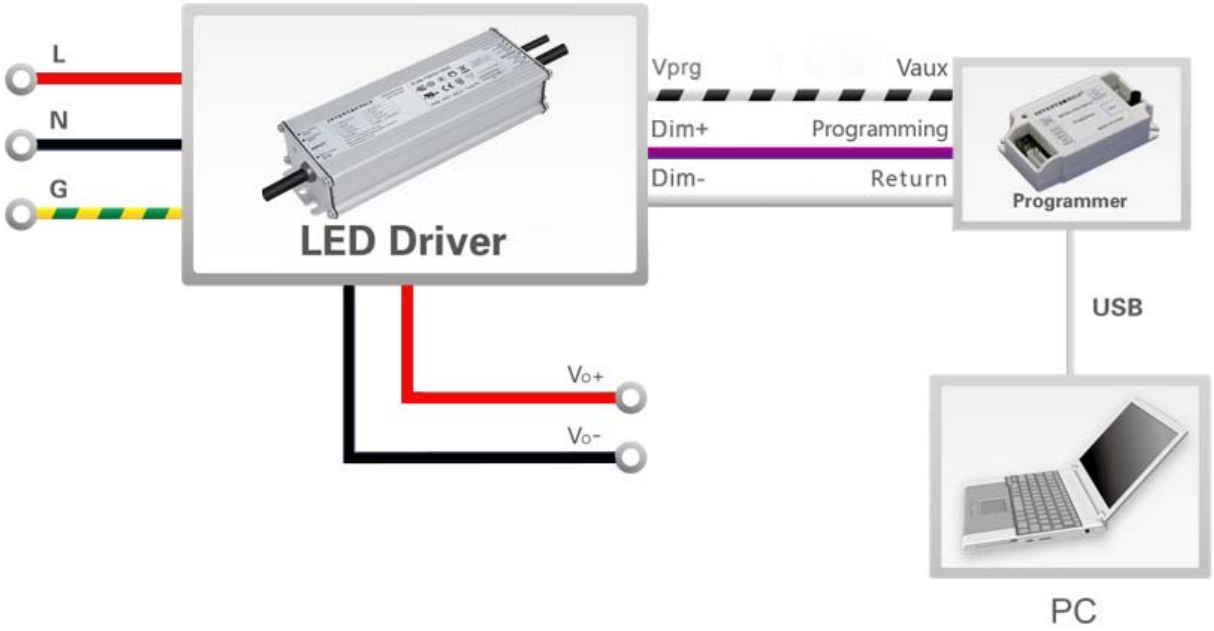

Note: The driver does not need to be powered on during the programming process.

- **Please refer to PRG-MUL2 (Programmer) datasheet for details.**

Downloaded from Arrow.com.

Mechanical Outline

EUM-150S105DG/EUM-150S150DG

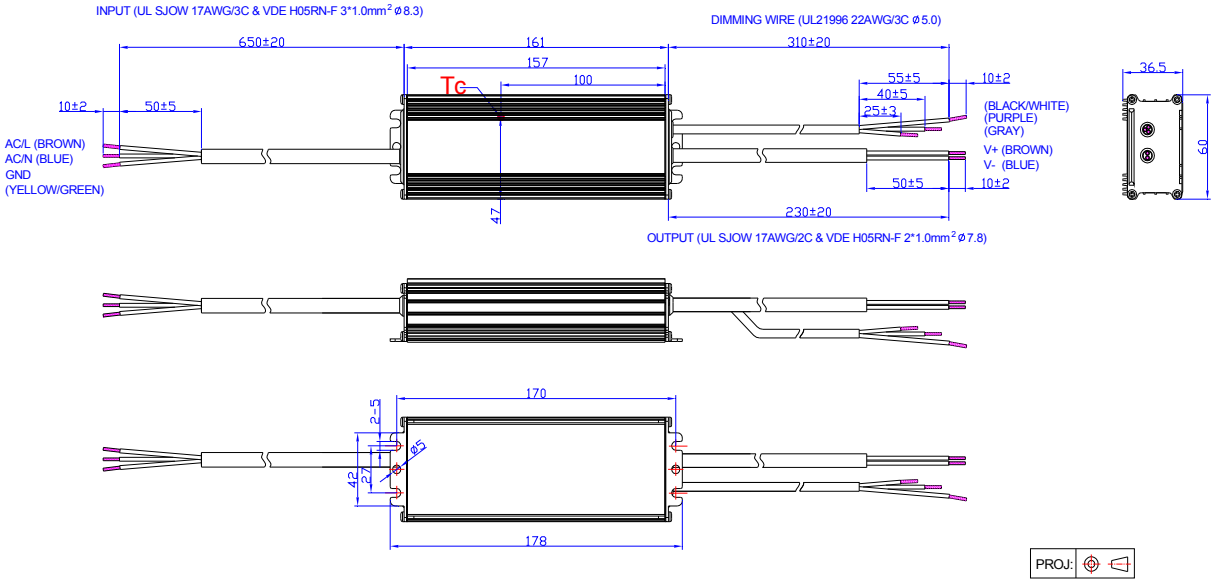

Unspecified tolerance:±1

EUM-150S210DG/EUM-150S420DG

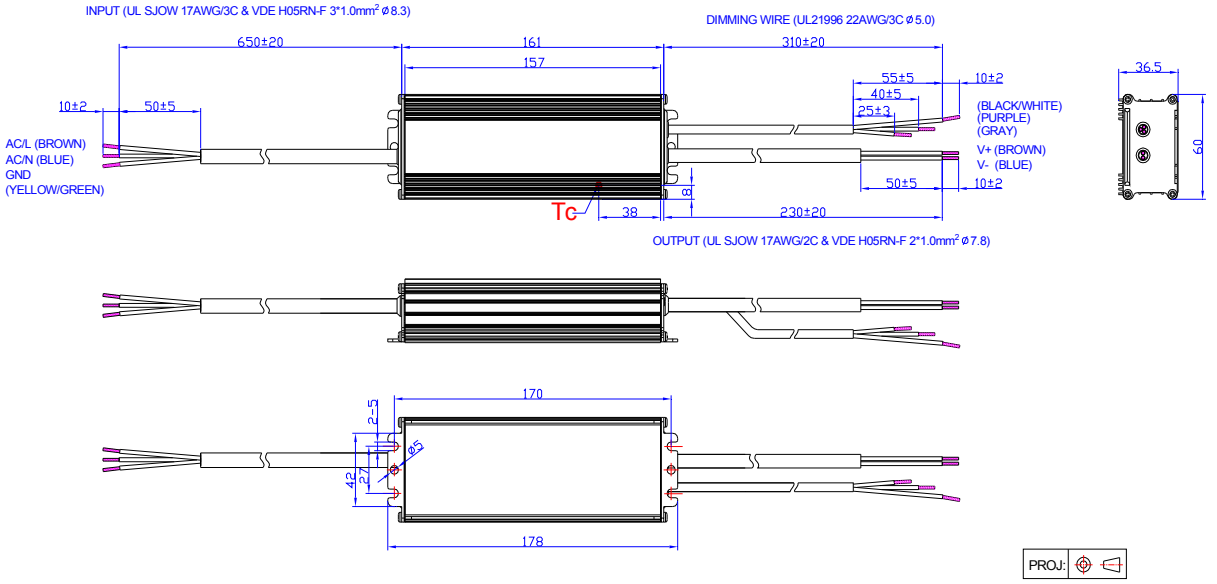

Unspecified tolerance:±1

Downloaded from Arrow.com.

EUM-150S105DT/EUM-150S150DT

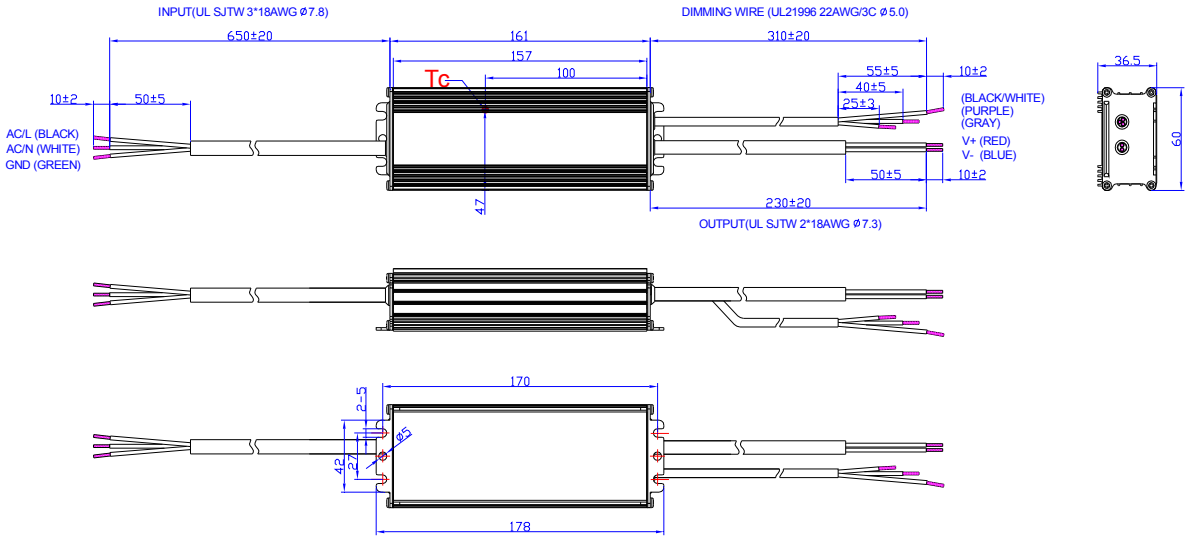

PROJ:

Unspecified tolerance:±1

EUM-150S210DT/EUM-150S420DT

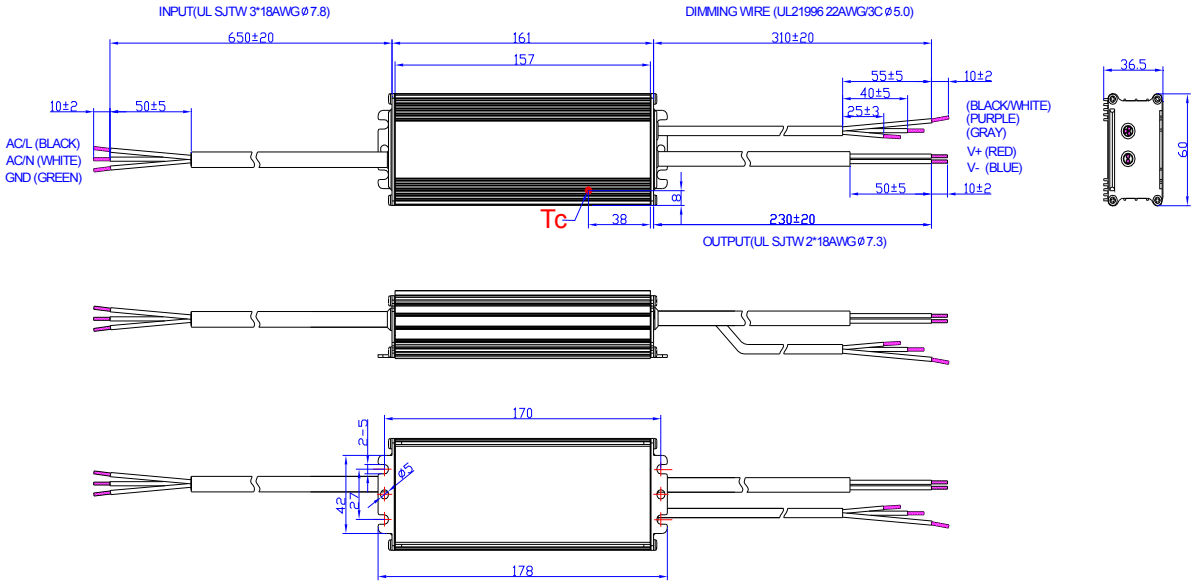

PROJ:

Unspecified tolerance:±1

Downloaded from Arrow.com.

EUM-150S105DB/EUM-150S150DB

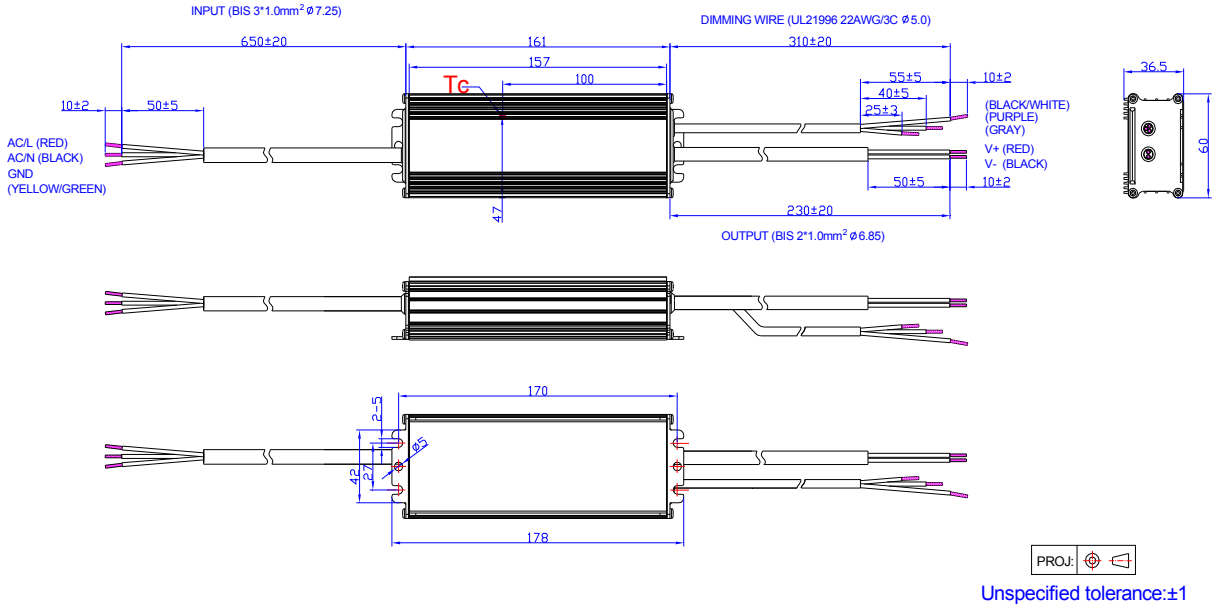

Unspecified tolerance:±1

EUM-150S210DB/EUM-150S420DB

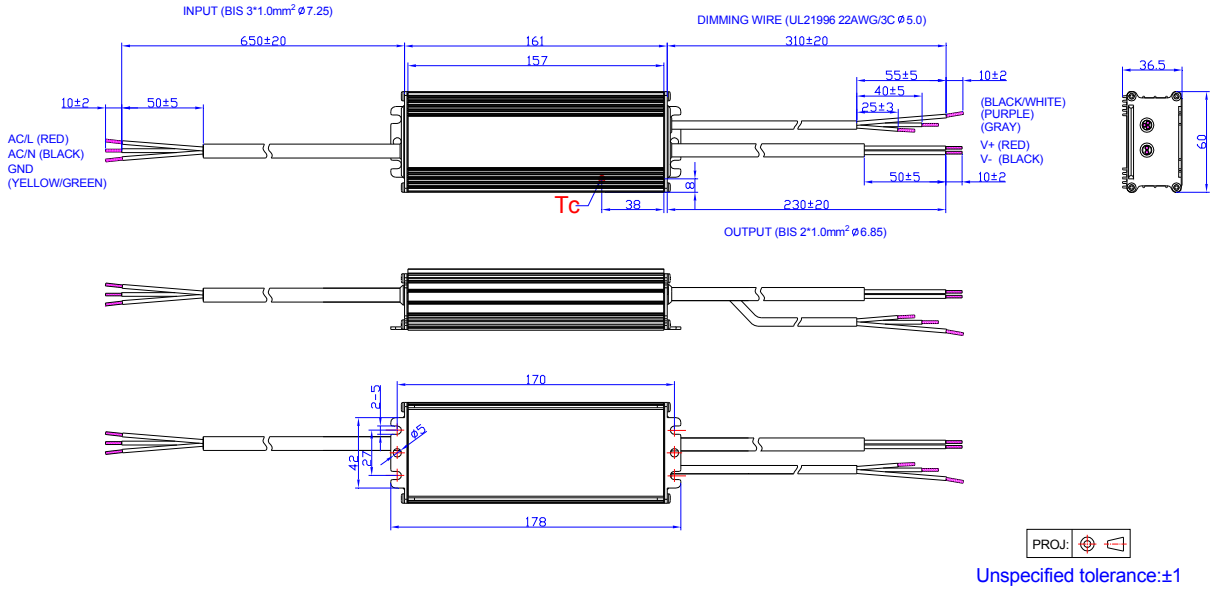

Unspecified tolerance:±1

RoHS Compliance

Our products comply with reference to RoHS Directive (EU) 2015/863 amending 2011/65/EU, calling for the elimination of lead and other hazardous substances from electronic products.

Downloaded from Arrow.com.

Revision History

Change Date	Rev.	Description of Change		
		Item	From	To
2021-03-09	A	Datasheets Release	/	/

Downloaded from Arrow.com.