JCM30 Series

DC-DC Converter

XP Power

30 Watts

- Single and Dual Outputs
- 2:1 Input Range
- 1″ x 1″ Footprint
- -40 °C to +100 °C Operation
- Full Load at 55 °C Ambient
- 1600 VDC Isolation
- Output Trim ±10%
- Remote On/Off
- MTBF 370 kHrs
- 3 Year Warranty

Dimensions:

JCM30:
1.0 x 1.0 x 0.41″ (25.4 x 25.0 x 10.4 mm)

Models & Ratings

Input Voltage	Output Voltage	Output Current	Input Current[1]		OVP setting	Efficiency	Max. capacitive load	Model Number[3]
			No Load	Full Load				
9-18 V	3.3 V	7.0 A	10 mA	2215 mA	3.9 V	87%	10000 µF	JCM3012S3V3
	5.0 V	6.0 A	10 mA	2810 mA	6.2 V	89%	7200 µF	JCM3012S05
	12.0 V	2.5 A	12 mA	2810 mA	15.0 V	89%	1200 µF	JCM3012S12
	15.0 V	2.0 A	12 mA	2810 mA	18.0 V	89%	1000 µF	JCM3012S15
	±12.0 V	±1.25 A	12 mA	2810 mA	±15.0 V	89%	±750 µF	JCM3012D12
	±15 V	±1.0 A	14 mA	2780 mA	±18.0 V	90%	±500 µF	JCM3012D15
18-36 V	3.3 V	7.0 A	10 mA	1105 mA	3.9 V	87%	10000 µF	JCM3024S3V3
	5 V	6.0 A	10 mA	1390 mA	6.2 V	90%	7200 µF	JCM3024S05
	12 V	2.5 A	10 mA	1375 mA	15.0 V	91%	1200 µF	JCM3024S12
	15 V	2.0 A	10 mA	1375 mA	18.0 V	91%	1000 µF	JCM3024S15
	±12 V	±1.25 A	10 mA	1375 mA	±15.0 V	91%	±750 µF	JCM3024D12
	±15 V	±1.0 A	10 mA	1375 mA	±18.0 V	92%	±500 µF	JCM3024D15
36-75 V	3.3 V	7.0 A	8 mA	545 mA	3.9 V	88%	10000 µF	JCM3048S3V3
	5 V	6.0 A	8 mA	695 mA	6.2 V	90%	7200 µF	JCM3048S05
	12 V	2.5 A	8 mA	695 mA	15.0 V	90%	1200 µF	JCM3048S12
	15 V	2.0 A	8 mA	685 mA	18.0 V	91%	1000 µF	JCM3048S15
	±12 V	±1.25 A	8 mA	685 mA	±15.0 V	91%	±750 µF	JCM3048D12
	±15 V	±1.0 A	8 mA	680 mA	±18.0 V	92%	±500 µF	JCM3048D15

Notes

1. Input currents measured at nominal input voltage.
2. Maximum capacitive load is per output.
3. Add suffix '-HK' for optional Heat Sink.

Mechanical Details

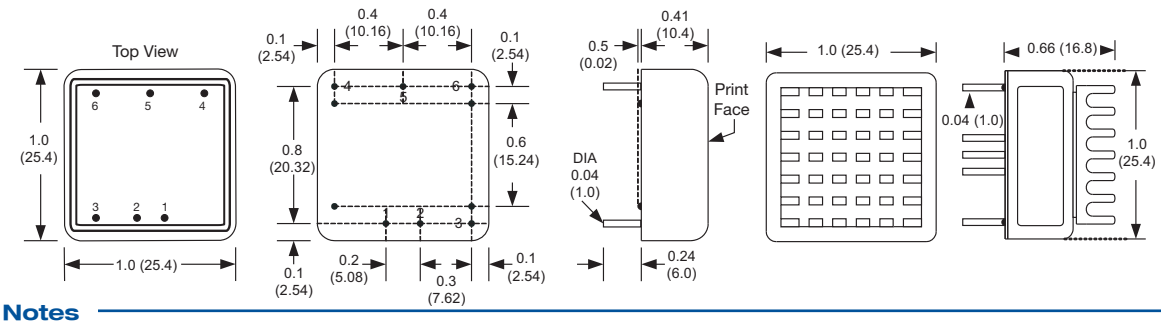

Pin Connections		
Pin	Single	Dual
1	+Vin	+Vin
2	-Vin	-Vin
3	Remote On/Off	Remote On/Off
4	+Vout	+Vout
5	Trim	Common
6	-Vout	-Vout

Notes

1. All dimensions are in inches (mm)
2. Weight: 0.042 lbs (19 g) approx.
3. Pin diameter: 0.04±0.002 (1.0 ±0.05)
4. Pin pitch tolerance: ±0.014 (±0.35)
5. Case tolerance: ±0.02 (±0.5)

Downloaded from Arrow.com.

Input

Characteristic	Minimum	Typical	Maximum	Units	Notes & Conditions
Input Voltage Range	9		18	VDC	12 V nominal
	18		36	VDC	24 V nominal
	36		75	VDC	48 V nominal
Input Reflected Ripple Current		30		mA pk-pk	Through 12 µH inductor and 47 µF capacitor
Input Surge			25	VDC for 100 ms	12 V models
			50	VDC for 100 ms	24 V models
			100	VDC for 100 ms	48 V models

Output

Characteristic	Minimum	Typical	Maximum	Units	Notes & Conditions
Output Voltage	3.3		30	VDC	See Models and Ratings table
Output Trim	±10			%	Single Output Versions
Initial Set Accuracy			±1	%	At full load
Minimum Load	0			%	No minimum load required
Line Regulation			±0.5	%	From minimum to maximum input at full load
Load Regulation			0.5/1.0	%	From 0% to full load for single/dual output
Cross Regulation			±5	%	On dual output models, when one output is at 100% load and other is varied from 25% load to full load
Ripple & Noise			75/60	mV pk-pk	Single output 10 µF X7R MLCC Dual output with 10 µF/25 V X7R MLCC on each output measured using 20 MHz bandwidth
Overload Protection		150		%	
Short Circuit Protection					Continuous trip and restart (hiccup), with auto recovery
Maximum Capacitive Load					See Models and Ratings table
Temperature Coefficient			0.02	%/°C	
Over Protection Voltage					See Models and Ratings table
Remote On/Off	Output is on if remote on/off (pin 3) is open or high (3.0 to 12 VDC) Output turns off if remote on/off (pin 3) is low (<1.2 VDC max)				

General

Characteristic	Minimum	Typical	Maximum	Units	Notes & Conditions
Efficiency		90		%	See Models and Ratings table
Isolation: Input to Output	1600			VDC	
Isolation: Input to Case	1600			VDC	
Switching Frequency		270		kHz	3.3 and 5.0 V
		330			Other models
Isolation Resistance	10^9			Ω	
Isolation Capacitance			2000	pF	
Power Density			73	W/in³	
Mean Time Between Failure	370			kHrs	MIL-HDBK-217F, +25 °C GB
Case Material	Black coated copper				
Pin Material	Solder coated brass				
Solder Profile	Wave solder 260°C maximum, 1.5mm from case for 10s maximum				
Water Wash	Water wash with de-ionised water, do not soak, dry thoroughly				
Weight		0.042 (19.0)		lb (g)	

Environmental

Characteristic	Minimum	Typical	Maximum	Units	Notes & Conditions
Operating Temperature	-40		+100	°C	See derating curve
Storage Temperature	-55		+125	°C	
Case Temperature			+105	°C	
Humidity			95	%RH	Non-condensing
Cooling					Natural convection

Downloaded from Arrow.com.

EMC: Emissions

Phenomenon	Standard	Test Level	Notes & Conditions
Conducted	EN55032	Class A	See Application Note
Radiated	EN55032	Class A	

EMC: Immunity

Phenomenon	Standard	Test Level	Criteria	Notes & Conditions
ESD Immunity	EN61000-4-2	±6 kV/±8 kV	A	Contact/Air Discharge
Radiated Immunity	EN61000-4-3	20 V/m	A	
EFT/Burst	EN61000-4-4	2 kV	A	External input filter required, see applications note
Surge	EN61000-4-5	2 kV	A	External input filter required, see applications note
Conducted Immunity	EN61000-4-6	10 V	A	
Magnetic Fields	EN61000-4-8	100 A/m	A	

Safety Approvals

Safety Agency	Safety Standard	Notes & Conditions
UL	UL60950-1, UL62368-1/CSA C22.2 No. 62368-1	

Mechanical Details

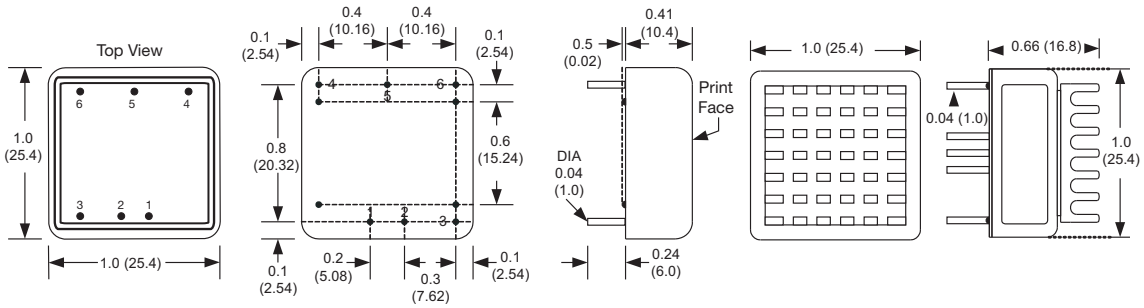

Pin Connections		
Pin	Single	Dual
1	+Vin	+Vin
2	-Vin	-Vin
3	Remote On/Off	Remote On/Off
4	+Vout	+Vout
5	Trim	Common
6	-Vout	-Vout

Notes

1. All dimensions are in inches (mm)
2. Weight: 0.042 lbs (19 g) approx.
3. Pin diameter: 0.04±0.002 (1.0 ±0.05)
4. Pin pitch tolerance: ±0.014 (±0.35)
5. Case tolerance: ±0.02 (±0.5)

Derating Curve

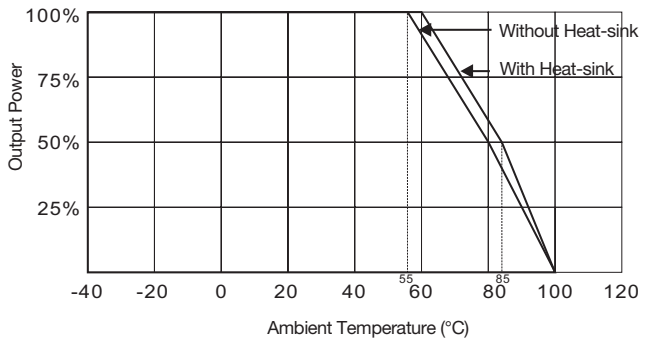

Downloaded from Arrow.com.

Application Notes

External Output Trimming

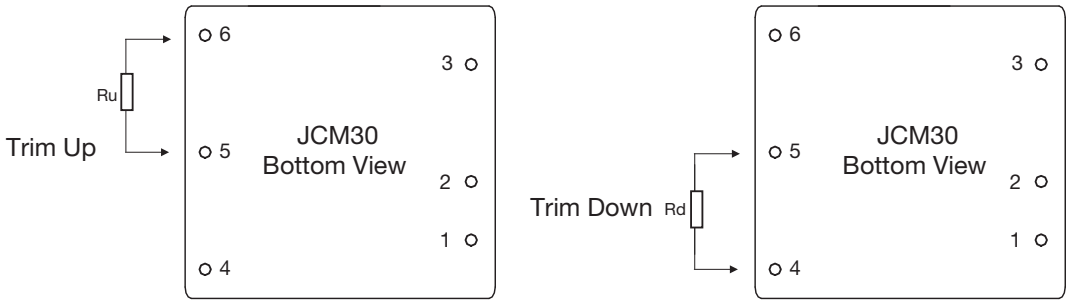

Trim Down Resistor Values (Rd)

Models	1%	2%	3%	4%	5%	6%	7%	8%	9%	10%
3V3	817.5 k	362.2 k	215.4 k	143.0 k	99.7 k	71.1 k	50.6 k	35.3 k	23.4 k	14.0 k
5V	119.9 k	63.6 k	40.4 k	27.7 k	19.7 k	14.2 k	10.2 k	7.1 k	4.7 k	2.7 k
12V	345.0 k	164.8 k	98.9 k	64.6 k	43.7 k	29.6 k	19.4 k	11.7 k	5.7 k	0.87 k
15V	174.3 k	91.1 k	56.6 k	37.7 k	25.8 k	17.6 k	11.6 k	7.0 k	3.5 k	0.55 k

Trim Up Resistor Values (Ru)

Models	1%	2%	3%	4%	5%	6%	7%	8%	9%	10%
3V3	567.6 k	263.2 k	158.5 k	105.5 k	73.5 k	52.1 k	36.8 k	25.2 k	16.3 k	9.1 k
5V	618.0 k	223.4 k	133.3 k	93.4 k	70.9 k	56.4 k	46.4 k	38.9 k	33.2 k	28.7 k
12V	1015.7 k	448.9 k	280.6 k	199.8 k	152.4 k	121.2 k	99.1 k	82.6 k	69.9 k	59.7 k
15V	661.5 k	231.3 k	134.0 k	91.0 k	66.8 k	51.3 k	40.4 k	32.5 k	26.4 k	21.5 k

EMI Filter
(Only needed for 12 V input versions)

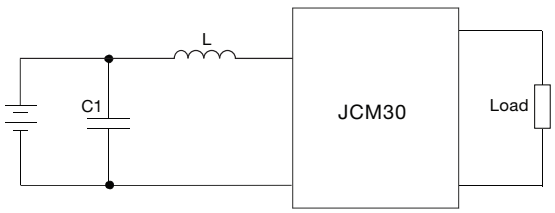

C1 = 1206, 335 k/50 V, X7R
L = 0.82 µH

EFT/Surge Filter

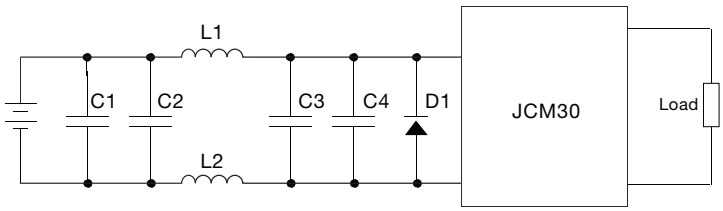

	C1	C2	L1	L2	C3	C4	D1
JCM3012	330 µF/100 V	470 µF/100 V	1 µH	1 µH	330 µF/100	470 µF/100	None
JCM3024	330 µF/100 V	None	Short	Short	None	None	TVS, 58 V, 3 kW
JCM3048	330 µF/100 V	None	Short	Short	None	None	TVS, 120 V, 3 kW

Downloaded from Arrow.com.