SGM2521/SGM2521A
SGM2522/SGM2522A
Programmable Current Limit Switches

GENERAL DESCRIPTION

The SGM2521/SGM2521A/SGM2522/SGM2522A are compact electronic fuses (eFuses), which can operate from 4.5V to 24V single supply. SGM2521/1A/2/2A are designed for a wide range of applications and can provide ±7% current limit accuracy at T_A = +25℃.

Internal protection functions are provided for over-current protection (OCP), over-voltage protection (OVP) and under-voltage lockout (UVLO). Fault conditions are indicated by the nFLT pin.

The threshold accuracy of UV and OV is 3%, which ensures close monitoring of bus voltage and reduces the demand of monitoring circuit.

The SGM2521/1A/2/2A are available in Green SOIC-8 and TDFN-2×3-8BL packages and operate over a temperature range of -40℃ to +85℃.

APPLICATIONS

Hard Drives
PCI-E SSD
Motherboard Power Management
White Goods, Appliances
Set-Top Boxes and Gaming Consoles

TYPICAL APPLICATION

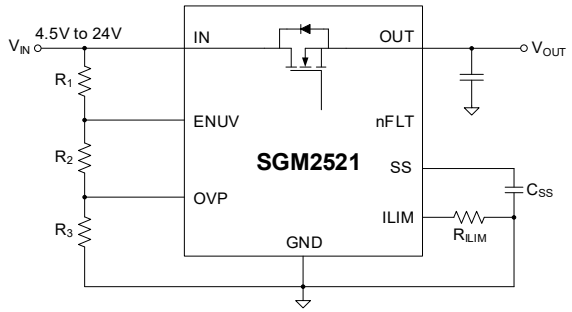

Figure 1. Typical Application Circuit

FEATURES

- **Wide Input Voltage Range from 4.5V to 24V with Surge up to 30V**
- **On-Resistance:**
  58mΩ (SOIC-8 Package)
  57mΩ (TDFN-2×3-8BL Package)
- **Programmable Soft-Start Time**
- **Programmable Current Limit: 260mA to 2A**
- **Current Limit Accuracy:**
  - **SGM2521/SGM2522:**
    ±7% Current Limit Accuracy at 1A at T_J = +25℃
  - **SGM2521A/SGM2522A:**
    ±7% Current Limit Accuracy at 285mA at T_J = +25℃
- **Protection Features**
  - **Short-Circuit Protection**
  - **Over-Voltage Protection**
  - **Under-Voltage Lockout**
  - **Fault Output for Short-Circuit, UVLO, Thermal Shutdown and OVP**
- **Enable Interface Pin**
- **Thermal Shutdown Protection**
  SGM2521/SGM2521A: Auto-Retry
  SGM2522/SGM2522A: Latch-Off
- **UL Recognized Component (File No. E532373*)**
- **-40℃ to +85℃ Operating Temperature Range**
- **Available in Green SOIC-8 and TDFN-2×3-8BL Packages**

Downloaded from Arrow.com.

PACKAGE/ORDERING INFORMATION

MODEL	PACKAGE DESCRIPTION	SPECIFIED TEMPERATURE RANGE	ORDERING NUMBER	PACKAGE MARKING	PACKING OPTION
SGM2521	TDFN-2×3-8BL	-40℃ to +85℃	SGM2521YTDC8G/TR	2521 XXXX	Tape and Reel, 3000
	SOIC-8	-40℃ to +85℃	SGM2521YS8G/TR	SGM 2521YS8 XXXXX	Tape and Reel, 4000
SGM2521A	TDFN-2×3-8BL	-40℃ to +85℃	SGM2521AYTDC8G/TR	ML6 XXXX	Tape and Reel, 3000
	SOIC-8	-40℃ to +85℃	SGM2521AYS8G/TR	SGM 2521AYS8 XXXXX	Tape and Reel, 4000
SGM2522	TDFN-2×3-8BL	-40℃ to +85℃	SGM2522YTDC8G/TR	2522 XXXX	Tape and Reel, 3000
	SOIC-8	-40℃ to +85℃	SGM2522YS8G/TR	SGM 2522YS8 XXXXX	Tape and Reel, 4000
SGM2522A	TDFN-2×3-8BL	-40℃ to +85℃	SGM2522AYTDC8G/TR	ML7 XXXX	Tape and Reel, 3000
	SOIC-8	-40℃ to +85℃	SGM2522AYS8G/TR	SGM 2522AYS8 XXXXX	Tape and Reel, 4000

MARKING INFORMATION

SGM2521: TDFN-2×3-8BL

(1) XXXX = Date Code and Trace Code.

X X X X

- Trace Code
- Date Code - Year

SGM2521A/SGM2522/SGM2522A: TDFN-2×3-8BL

(2) XXXX = Date Code.

X X X X

- Date Code - Week
- Date Code - Year

SOIC-8

(3) XXXXX = Date Code and Vendor Code.

X X X X X

- Vendor Code
- Date Code - Week
- Date Code - Year

Green (RoHS & HSF): SG Micro Corp defines "Green" to mean Pb-Free (RoHS compatible) and free of halogen substances. If you have additional comments or questions, please contact your SGMICRO representative directly.

Downloaded from Arrow.com.

ABSOLUTE MAXIMUM RATINGS

IN, OUT, ENUV, nFLT, OVP to GND ..... -0.3V to 30V
SS, ILIM to GND ..... -0.3V to 6V
Package Thermal Resistance
SOIC-8, θ_{JA} ..... 107.8℃/W
SOIC-8, θ_{JB} ..... 64℃/W
SOIC-8, θ_{JC} ..... 60.1℃/W
TDFN-2×3-8BL, θ_{JA} ..... 45.5℃/W
TDFN-2×3-8BL, θ_{JB} ..... 19.8℃/W
TDFN-2×3-8BL, $\theta_{JC\ (TOP)}$ ..... 59.2℃/W
TDFN-2×3-8BL, $\theta_{JC\ (BOT)}$ ..... 6.1℃/W
Package Thermal Characterization Parameter
SOIC-8, ψ_{JT} ..... 12.7℃/W
SOIC-8, ψ_{JB} ..... 62.5℃/W
TDFN-2×3-8BL, ψ_{JT} ..... 2.4℃/W
TDFN-2×3-8BL, ψ_{JB} ..... 19℃/W
Power Dissipation, P_D @ T_A = +25℃
SOIC-8 ..... 1.1W
TDFN-2×3-8BL 2.7W
Junction Temperature ..... +150℃
Storage Temperature Range ..... -65℃ to +150℃
Lead Temperature (Soldering, 10s) ..... +260℃
ESD Susceptibility
HBM 4000V
CDM 1000V

RECOMMENDED OPERATING CONDITIONS

Supply Input Voltage ..... 4.5V to 24V
Operating Ambient Temperature Range ..... -40℃ to +85℃
Operating Junction Temperature Range ..... -40℃ to +125℃

OVERSTRESS CAUTION

Stresses beyond those listed in Absolute Maximum Ratings may cause permanent damage to the device. Exposure to absolute maximum rating conditions for extended periods may affect reliability. Functional operation of the device at any conditions beyond those indicated in the Recommended Operating Conditions section is not implied.

ESD SENSITIVITY CAUTION

This integrated circuit can be damaged if ESD protections are not considered carefully. SGMICRO recommends that all integrated circuits be handled with appropriate precautions. Failure to observe proper handling and installation procedures can cause damage. ESD damage can range from subtle performance degradation to complete device failure. Precision integrated circuits may be more susceptible to damage because even small parametric changes could cause the device not to meet the published specifications.

DISCLAIMER

SG Micro Corp reserves the right to make any change in circuit design, or specifications without prior notice.

Downloaded from Arrow.com.

PIN CONFIGURATIONS

(TOP VIEW)

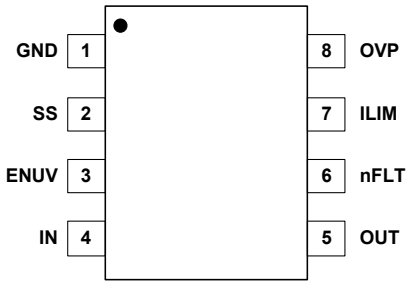

SOIC-8

(TOP VIEW)

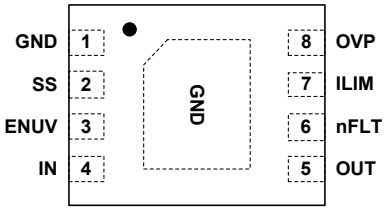

TDFN-2×3-8BL

PIN	NAME	FUNCTION
1	GND	Ground.
2	SS	Soft-Start Pin. The capacitor between SS and GND pins will set the slew rate according to the application requirements.
3	ENUV	Enable Input or Under-Voltage Lockout. The UVLO threshold is programmed by an external resistor divider. If under-voltage occurs, the internal FET will be disconnected and an error will be reported at the nFLT pin. Pull this pin to GND to reset the latch (thermal fault) of the SGM2522/SGM2522A.
4	IN	Input Supply Voltage.
5	OUT	Output of the Device.
6	nFLT	Fault Event Indicator. This pin is an open-drain output, and when a fault (under-voltage, over-voltage, short-circuit or thermal shutdown) occurs, it will be low. A fast-trip does not trigger fault.
7	ILIM	Current Limit Programming Pin. Connect a resistor R_{ILIM} from this pin to GND to set the overload and short-circuit current limit. Do not float this pin.
8	OVP	Over-Voltage Protection Pin. If over-voltage occurs, the internal FET will be disconnected and an error will be reported at the nFLT pin.

Downloaded from Arrow.com.

ELECTRICAL CHARACTERISTICS

(T_J = -40℃ to +85℃, V_{IN} = 4.5V to 24V, V_{ENUV} = 2V, V_{OVP} = 0V, R_{ILIM} = 95.3kΩ, C_{SS} = open, nFLT = open, typical values are measured at T_J = +25℃, unless otherwise noted.)

PARAMETER	SYMBOL	CONDITIONS		MIN	TYP	MAX	UNITS
Input Supply (IN)							
Input Voltage Range	V_{IN}			4.5		24	V
UVLO Threshold Voltage	V_{UVR}	Rising		4.19	4.27	4.36	V
UVLO Hysteresis	V_{UVHYS}			190	230	270	mV
Supply Quiescent Current	I_{Q_ON}	V_{ENUV} = 2V, V_{IN} = 12V		0.12	0.17	0.23	mA
Supply Disabled Current	I_{Q_OFF}	V_{ENUV} = 0V, V_{IN} = 12V		0.1	0.8	1.4	μA
Over-Voltage Protection (OVP)							
Over-Voltage Threshold Voltage	V_{OVPR}	Rising		1.35	1.39	1.42	V
	V_{OVPF}	Falling		1.30	1.33	1.37	V
OVP Input Leakage Current	I_{OVP}	0V ≤ V_{OVP} ≤ 18V		-100	0	100	nA
Enable and Under-Voltage Lockout (ENUV)							
ENUV Threshold Voltage	V_{ENR}	Rising		1.34	1.38	1.43	V
	V_{ENF}	Falling		1.27	1.33	1.39	V
ENUV Threshold Voltage to Reset Thermal Fault	V_{ENF_RST}	Falling				0.53	V
EN Input Leakage Current	I_{EN}	0 ≤ V_{ENUV} ≤ 18V		-100	0	100	nA
Soft-Start: Output Ramp Control (SS)							
SS Charging Current	I_{SS}	V_{SS} = 0V		0.72	1.03	1.33	μA
SS Discharging Resistance	R_{SS}	V_{ENUV} = 0V, I_{SS} = 10mA sinking		47	67	89	Ω
SS Maximum Capacitor Voltage	V_{SSMAX}				5.3		V
SS to OUT Gain	$GAIN_{SS}$	$\Delta V_{OUT}/\Delta V_{SS}$		4.82	4.95	5.10	V/V
Current Limit Programming (ILIM)							
ILIM Pin Bias Current	I_{ILIM}			8.8	10	11.4	μA
Current Limit	I_{LIMIT}	SGM2521/2	R_{ILIM} = 35.7kΩ	0.224	0.353	0.467	A
			R_{ILIM} = 45.3kΩ	0.315	0.455	0.575	
			R_{ILIM} = 95.3kΩ, T_J = +25℃	0.930	1.000	1.070	
			R_{ILIM} = 95.3kΩ	0.884	1.000	1.114	
			R_{ILIM} = 150kΩ	1.339	1.608	1.917	
			R_{ILIM} = Short, shorted resistor current limit	0.105	0.216	0.325	
		SGM2521A/2A	R_{ILIM} = 27kΩ, T_J = +25℃	0.266	0.285	0.304	
			R_{ILIM} = 27kΩ	0.253	0.285	0.316	
			R_{ILIM} = 35.7kΩ	0.281	0.372	0.454	
			R_{ILIM} = 45.3kΩ	0.353	0.466	0.570	
			R_{ILIM} = 95.3kΩ	0.704	0.943	1.172	
			R_{ILIM} = 150kΩ	0.977	1.454	1.919	
			R_{ILIM} = Short, shorted resistor current limit	0.154	0.240	0.322	
Fast-Trip Comparator Threshold	$I_{FAST\text{-}TRIP}$	R_{ILIM} in kΩ		1.8 × I_{LIMIT}			A
ILIM Open Resistor Detect Threshold	V_{ILIM_OPEN}	V_{ILIM} rising, R_{ILIM} = Open		2.9	3.0	3.1	V

Downloaded from Arrow.com.

ELECTRICAL CHARACTERISTICS (continued)

(T_J = -40℃ to +85℃, V_{IN} = 4.5V to 24V, V_{ENUV} = 2V, V_{OVP} = 0V, R_{ILIM} = 95.3kΩ, C_{SS} = open, nFLT = open, typical values are measured at T_J = +25℃, unless otherwise noted.)

PARAMETER	SYMBOL	CONDITIONS	MIN	TYP	MAX	UNITS
On-Resistance (IN - OUT)						
FET On-Resistance	R_{DSON}	SOIC-8	34	58	81	mΩ
		TDFN-2×3-8BL	35	57	81	
Pass FET Output (OUT)						
OUT Bias Current in Off-State	I_{LKG_OUT}	V_{ENUV} = 0V, V_{OUT} = 0V (Sourcing)	-0.5	0.1	0.5	μA
	I_{SINK_OUT}	V_{ENUV} = 0V, V_{OUT} = 300mV (Sinking)	-0.5	0.2	0.5	
Fault Flag (nFLT): Active-Low						
nFLT Pull-Down Resistance	R_{nFLT}	Device in fault condition, V_{ENUV} = 0V, I_{nFLT} = 100mA	24	31	41	Ω
nFLT Input Leakage Current	I_{nFLT}	Device not in fault condition, V_{nFLT} = 0V, 18V	-0.5	0.0	0.5	μA
Thermal Shutdown (TSD)						
Thermal Shutdown Threshold	T_{SD}	Rising		150		℃
Thermal Shutdown Hysteresis	T_{HYS}			20		℃

Downloaded from Arrow.com.

TIMING REQUIREMENTS

(T_J = +25℃, V_{IN} = 12V, V_{ENUV} = 2V, V_{OVP} = 0V, R_{ILIM} = 95.3kΩ, C_{SS} = open, nFLT = open, unless otherwise noted.)

PARAMETER	SYMBOL	CONDITIONS	MIN	TYP	MAX	UNITS
Enable and Under-Voltage Lockout (ENUV)						
Turn-On Delay	t_{ON_DLY}	ENUV↑ to V_{OUT} = 1V, C_{SS} = open		96		μs
Turn-Off Delay	t_{OFF_DLY}	ENUV↓ to V_{OUT}↓		8		μs
Over-Voltage Protection (OVP)						
OVP Disable Delay	t_{OVP_DLY}	OVP↑ to V_{OUT}↓		8		μs
Soft-Start: Output Ramp Control (SS)						
Output Ramp Time	t_{SS}	ENUV↑ to V_{OUT} = 11V, with C_{SS} = open, C_{OUT} = 2.2μF	0.17	0.27	0.38	ms
		ENUV↑ to V_{OUT} = 11V, with C_{SS} = 1.2nF, C_{OUT} = 2.2μF	1.7	2.9	3.8	
Current Limit Programming (ILIM)						
Fast-Trip Comparator Delay	$t_{FAST\text{-}TRIP_DLY}$	I_{OUT} > $I_{FAST\text{-}TRIP}$		3		μs
Thermal Shutdown (TSD)						
Retry Delay after Thermal Shutdown Recovery, T_J < [T_{SD} - 20℃]	t_{SD_DLY}	SGM2521/SGM2521A only, V_{IN} = 12V		130		ms
		SGM2521/SGM2521A only, V_{IN} = 4.5V		130		ms

PARAMETRIC MEASUREMENT INFORMATION

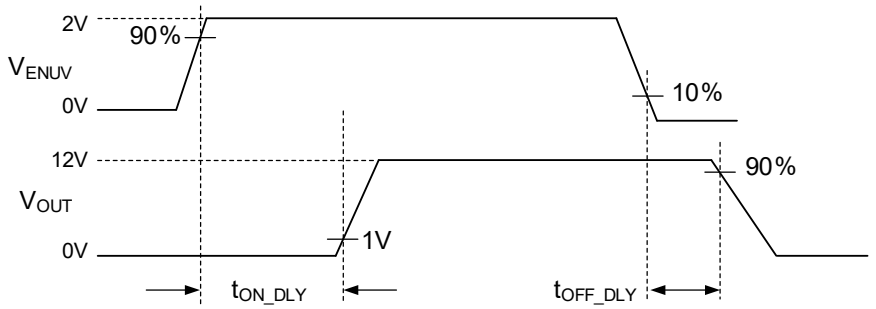

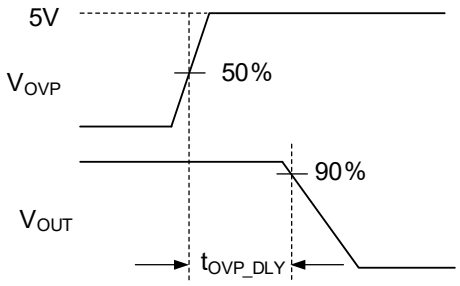

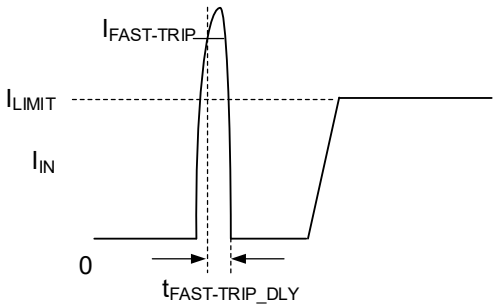

Downloaded from Arrow.com.

TYPICAL PERFORMANCE CHARACTERISTICS

T_J = +25℃, V_{IN} = 4.5V to 24V, V_{ENUV} = 2V, V_{OVP} = 0V, R_{ILIM} = 95.3kΩ, C_{SS} = open, nFLT = open, unless otherwise noted.

UVLO Threshold Voltage vs. Temperature

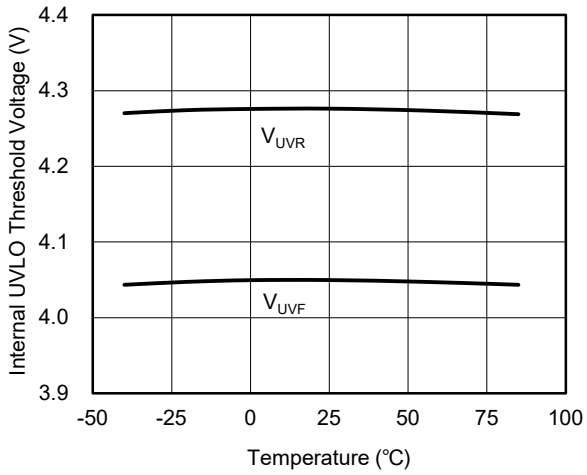

Input Supply Current vs. Supply Voltage during Normal Operation

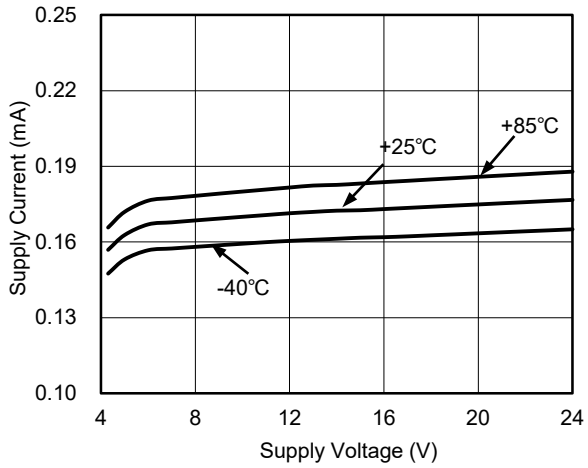

Input Supply Current vs. Supply Voltage at Shutdown

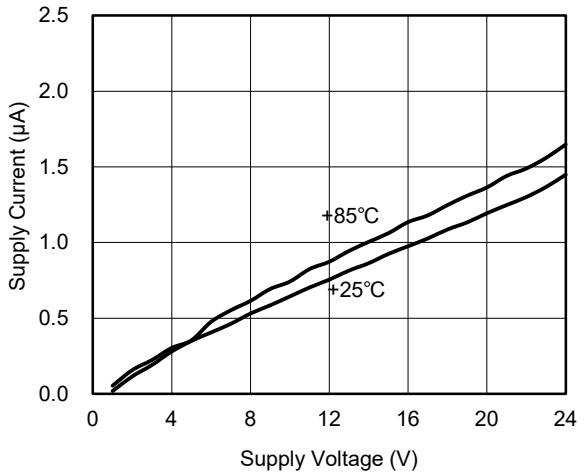

ENUV and OVP Threshold Votage vs. Temperature

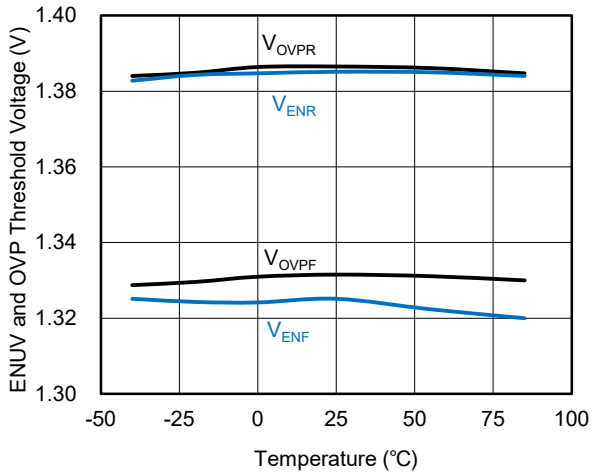

ENUV Threshold Voltage to Reset Fault Latch vs. Temperature

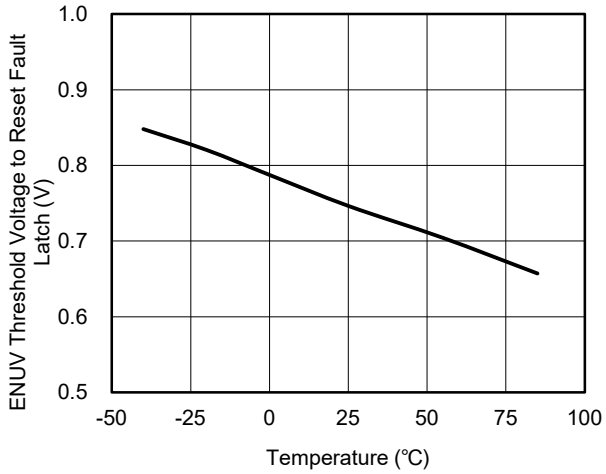

SS Charging Current vs. Temperature

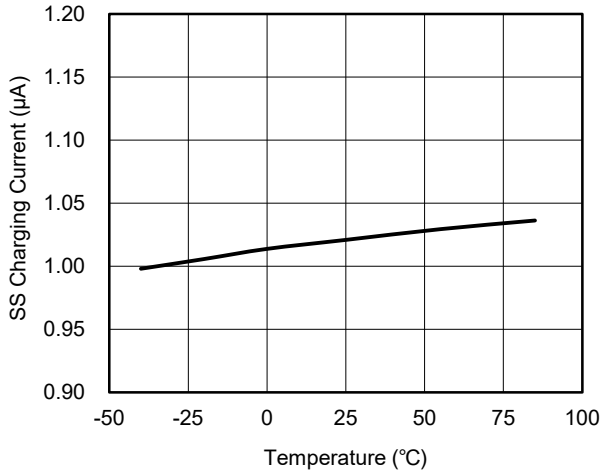

Downloaded from Arrow.com.

TYPICAL PERFORMANCE CHARACTERISTICS (continued)

T_J = +25℃, V_{IN} = 4.5V to 24V, V_{ENUV} = 2V, V_{OVP} = 0V, R_{ILIM} = 95.3kΩ, C_{SS} = open, nFLT = open, unless otherwise noted.

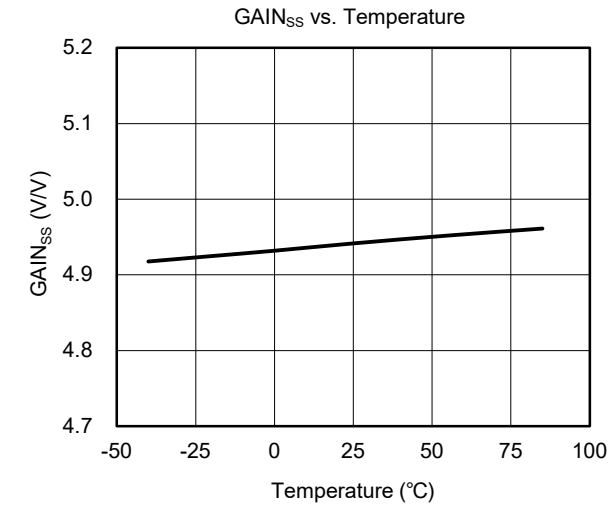

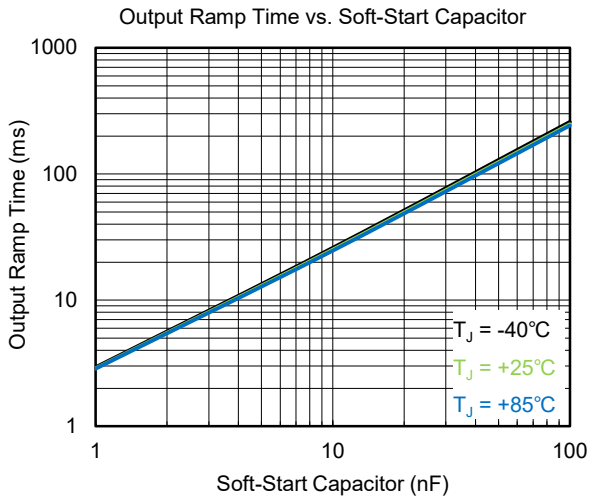

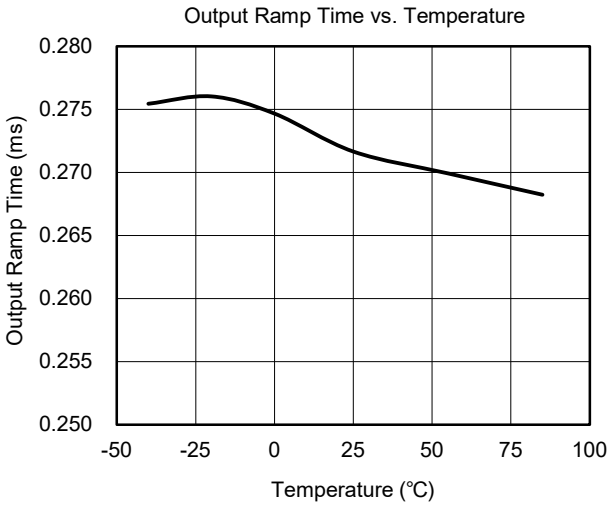

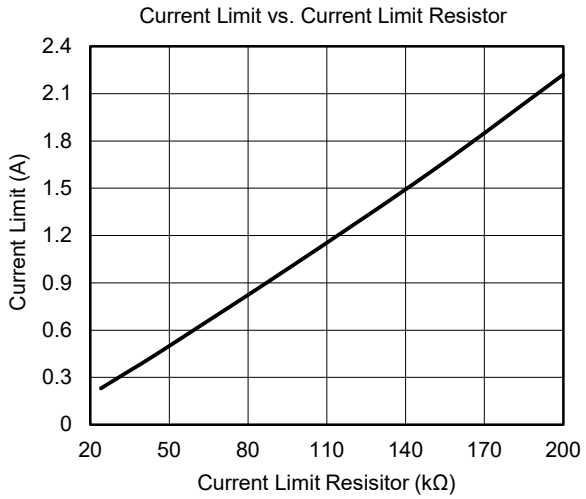

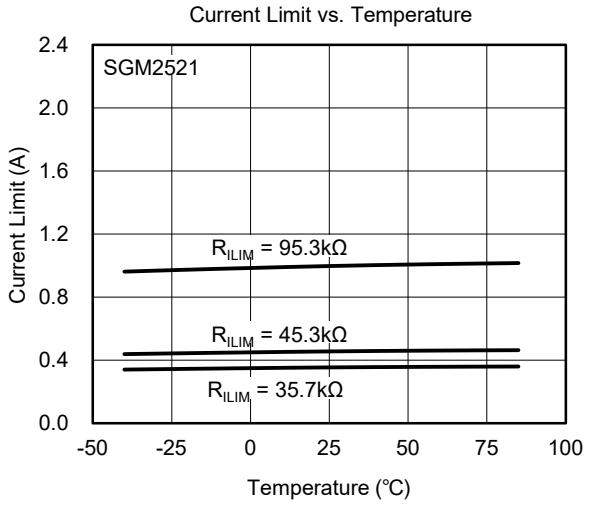

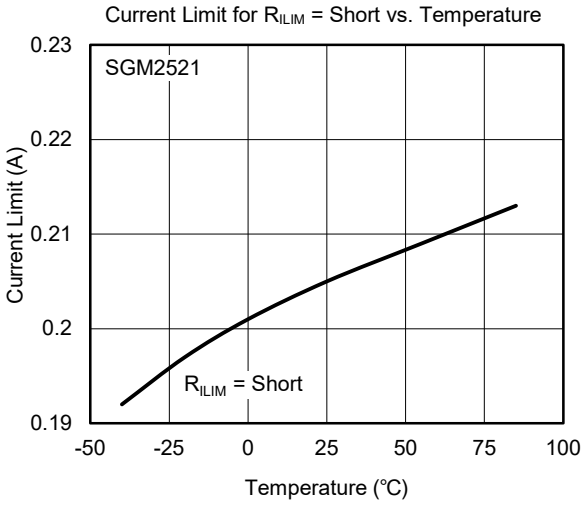

Downloaded from Arrow.com.

TYPICAL PERFORMANCE CHARACTERISTICS (continued)

T_J = +25℃, V_{IN} = 4.5V to 24V, V_{ENUV} = 2V, V_{OVP} = 0V, R_{ILIM} = 95.3kΩ, C_{SS} = open, nFLT = open, unless otherwise noted.

On-Resistance vs. Temperature

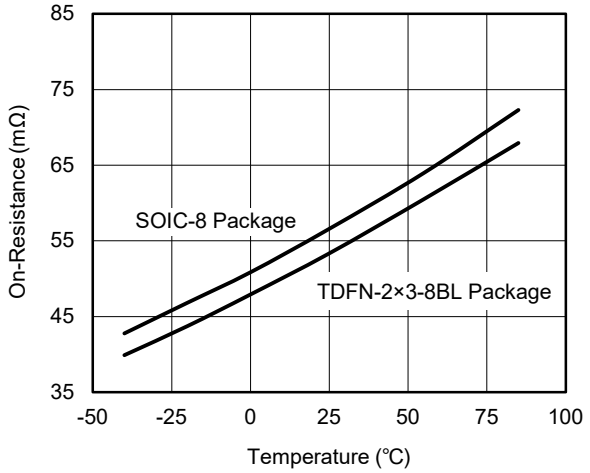

Current Limit Accuracy vs. Current Limit

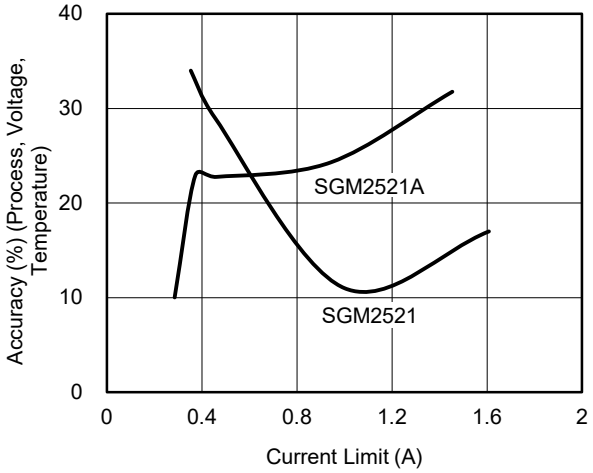

Turn-On with Enable

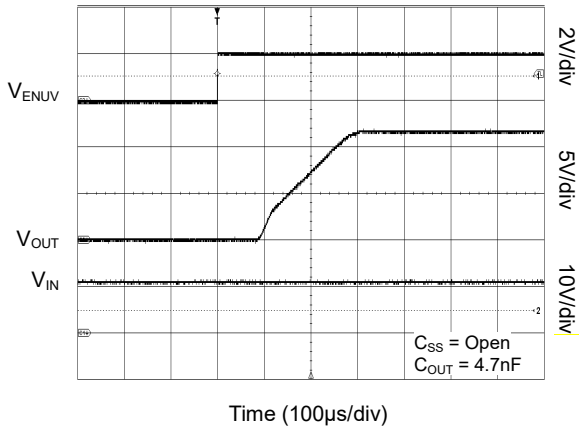

Turn-On with Enable

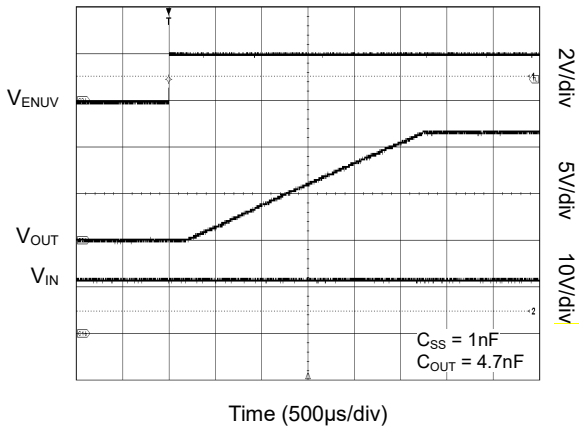

ENUV Turn-On Delay: ENUV↑ to Output Ramp↑

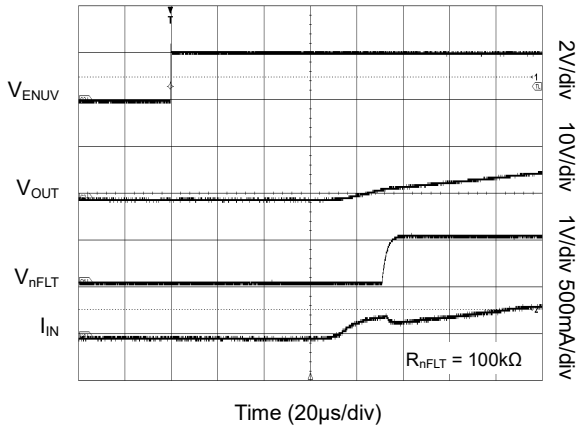

ENUV Turn-Off Delay: ENUV↓ to Fault↓

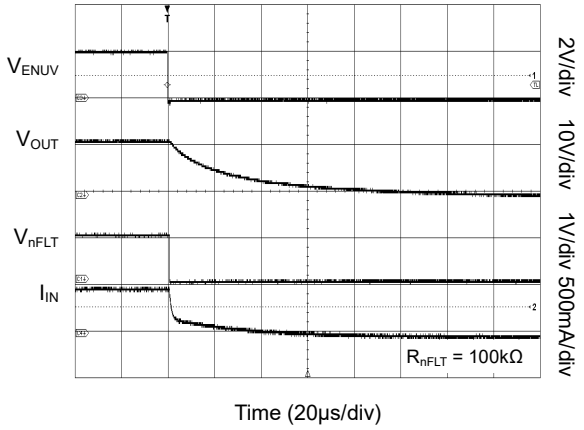

Downloaded from Arrow.com.

TYPICAL PERFORMANCE CHARACTERISTICS (continued)

T_J = +25℃, V_{IN} = 4.5V to 24V, V_{ENUV} = 2V, V_{OVP} = 0V, R_{ILIM} = 95.3kΩ, C_{SS} = open, nFLT = open, unless otherwise noted.

OVP Turn-On Delay: OVP↓ to Output Ramp↑

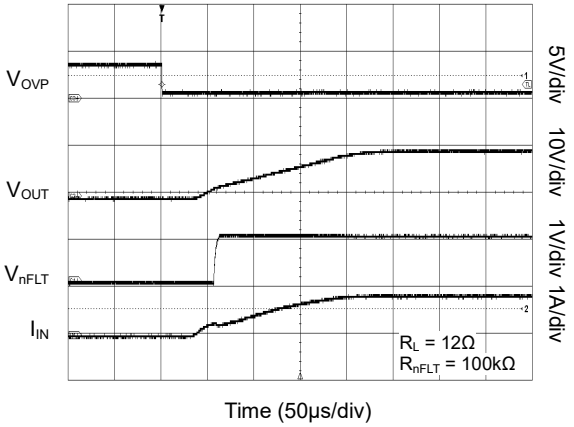

OVP Turn-Off Delay: OVP↑ to Fault↓

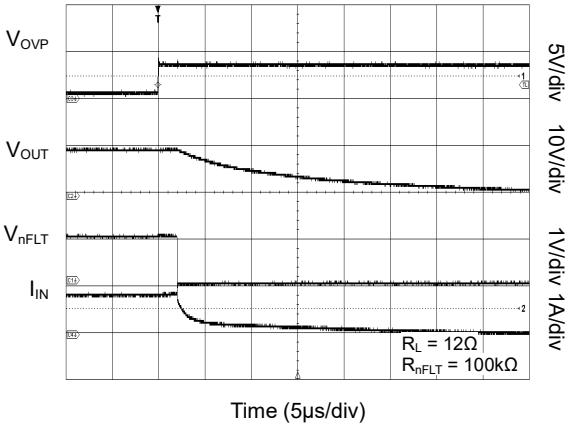

Hot-Short: Fast-Trip Response and Current Regulation

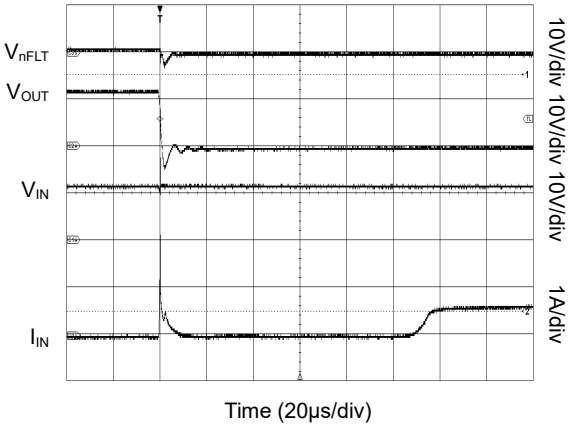

Hot-Short: Fast-Trip Response (Zoomed)

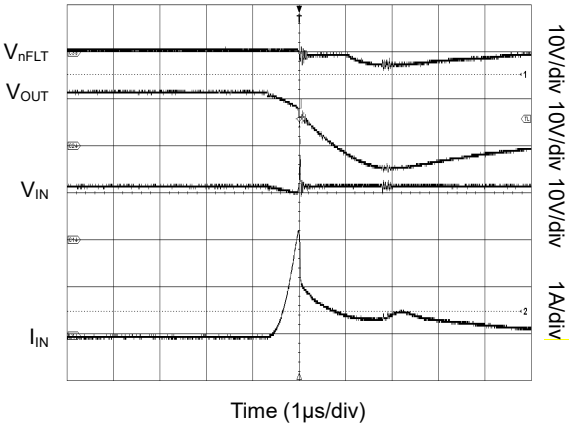

Downloaded from Arrow.com.

FUNCTIONAL BLOCK DIAGRAM

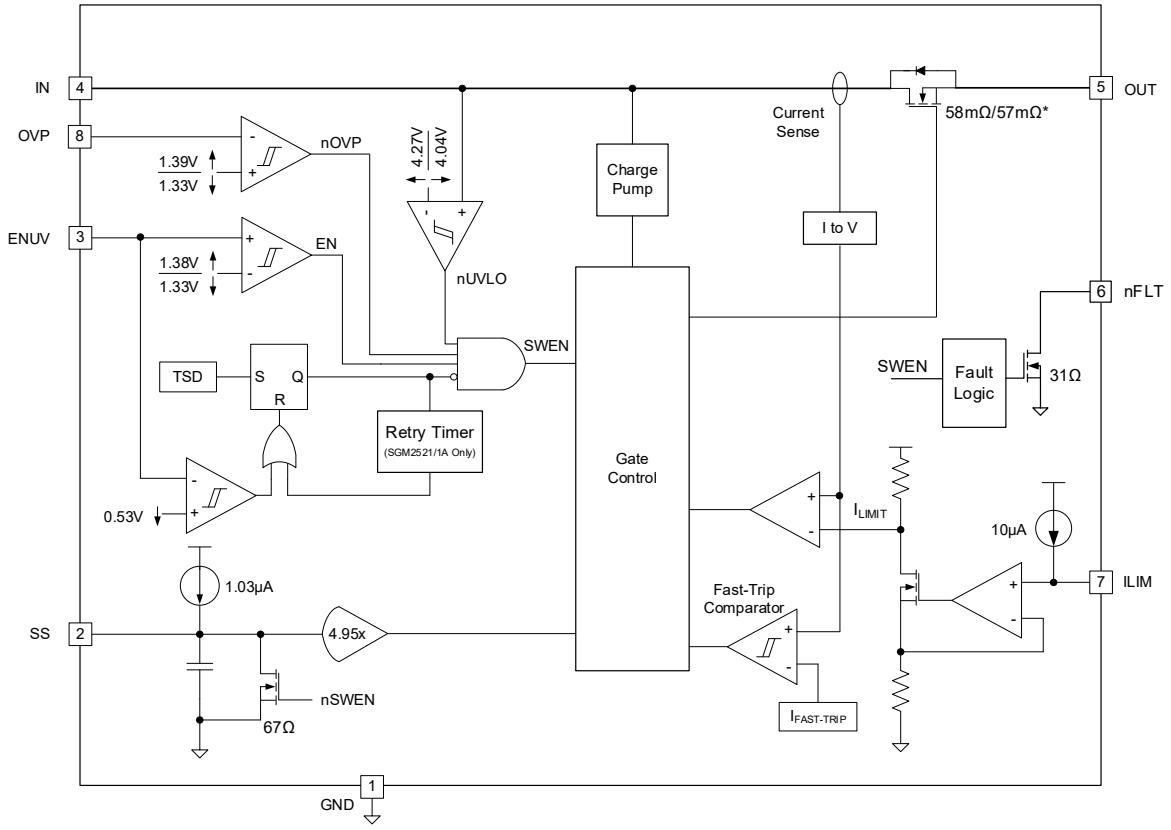

NOTE *: 58mΩ for SOIC-8 Package
57mΩ for TDFN-2×3-8BL Package

Figure 2. Functional Block Diagram

Downloaded from Arrow.com.

DETAILED DESCRIPTION

Overview

The SGM2521/1A/2/2A family is an 8-pin, 4.5V to 24V eFuse with thermal shutdown. To reduce voltage drop for low voltage and high current rails, the device implements a low on-resistance N-MOSFET which reduces the dropout voltage across the device.

The configurable rise time of the device greatly reduces inrush current caused by large bulk load capacitances or hot-plug boards, thereby reducing or eliminating power supply drop. The current limit threshold can be programmed between 0.26A and 2A through an external resistor.

When the output load exceeds the current limit threshold or a short-circuit event is present, the device limits the output current to a safe level by increasing the on-resistance of the power switch. Continuous heavy overloads and short-circuits that increase power dissipation of the switch can cause the junction temperature to rise, in which case thermal protection circuit will shut off the switch to prevent damage.

The device starts its operation by monitoring the V_{IN} bus. When V_{IN} exceeds the under-voltage lockout threshold, the device samples the ENUV pin. A high level on this pin enables the internal N-MOSFET. When V_{IN} exceeds UVLO threshold and V_{ENUV} exceeds 1.38V, the internal N-MOSFET of the device starts conducting and allows current to flow from IN to OUT. When V_{ENUV} is held low (below V_{ENF}), internal N-MOSFET is turned off. When the voltage of OVP pin is more than V_{OVPR}, the internal N-MOSFET is turned off and protects the downstream load. The device also features a fault flag output (nFLT) pin to monitor system status and control downstream load. The device has a thermal protection feature to protect itself against thermal damage due to over-temperature.

Adjustable Enable and Under-Voltage Lockout (UVLO)

The ENUV pin controls the state of the switch. In its high-state, the internal N-MOSFET is enabled. A low level on this pin turns off the internal N-MOSFET. High and low levels are specified in the electrical characteristics of the datasheet.

It is recommended to add an external bypass capacitor between ENUV and GND pins to avoid the noise of instability power or probabilistic power failure. As an under-voltage lockout pin, the UVLO threshold is programmed by an external resistor divider, as shown in Figure 3.

Once the input rail under-voltage occurs, the N-MOSFET will be turned off quickly. Connect the ENUV pin to the V_{IN} rail to avoid this function if it is not needed. Do not leave the ENUV pin floating.

The device implements the input UVLO and sets two UVLOs in combination with ENUV. If $V_{IN} < V_{UVF}$, the device is disabled and ENUV can set the V_{IN} rise threshold, so the device can set the section active voltage to avoid the input rail fluctuation.

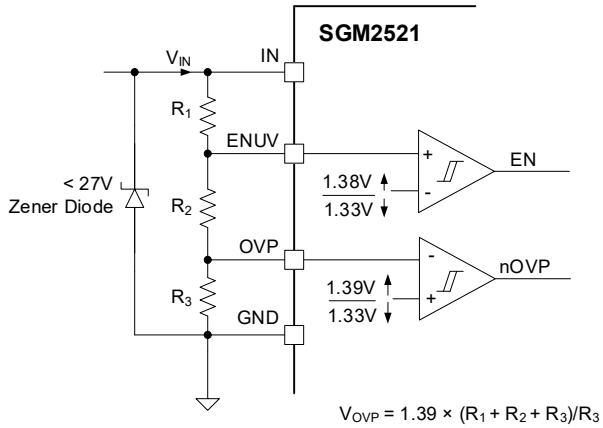

Figure 3. ENUV and Input OVP Set by R_1, R_2 and R_3

Over-Voltage Protection (OVP)

The SGM2521/1A/2/2A family features over-voltage protection function. The over-voltage threshold is programmed by the resistor divider from the power supply to the OVP terminal and to GND, as shown in Figure 3. If the voltage of OVP pin is higher than V_{OVPR}, the device turns off the internal N-MOSFET. If not used, connect this pin to GND.

Downloaded from Arrow.com.

DETAILED DESCRIPTION (continued)

Hot-Plug and Inrush Current Restrict

In the use of hot-plug boards, the surge current limits the voltage drop of the backplane power supply voltage and will lead to the unintended resets of the system power supply. The capacitor between SS and GND pins will set the slew rate according to the application requirements. An approximate formula for the relationship between C_{SS} and slew rate is shown in Equation 1:

$$I_{SS} = \frac{C_{SS}}{GAIN_{SS}} \times \frac{dV_{OUT}}{dt} \quad (1)$$

where:

I_{SS} = 1.03μA (TYP)

dV_{OUT}/dt = Target output slew rate

$GAIN_{SS} = \Delta V_{OUT}/\Delta V_{SS} = 4.95$

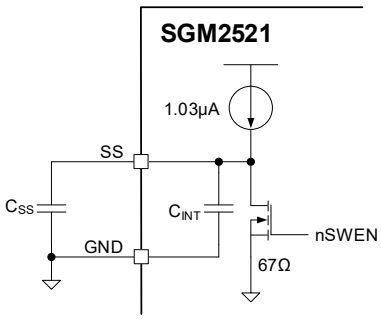

Figure 4. Output Ramp Time t_{SS} is Set by C_{SS}

Equation 2 shows how to calculate the total output ramp time (t_{SS}) when the output rises from 0V to V_{IN}:

$$t_{SS} = 20.04 \times 10^4 \times V_{IN} \times C_{SS} \quad (2)$$

where C_{SS} is in Farad.

The inrush current (I_{INRUSH}) can be calculated as:

$$I_{INRUSH} = C_{OUT} \times \frac{V_{IN}}{t_{SS}} \quad (3)$$

Rise time can be calculated by multiplying the input voltage by the slew rate. If floating this pin, the slew rate of the output obtains a default value ~50V/ms (minimum t_{SS}).

For existing load power on conditions, input maximum current will be limited to I_{LIMIT} point.

If V_{OUT} is shorted, SGM2521/SGM2521A will try to restart automatically, the chips have to take all the power at this time, and C_{SS} needs to be limited to protect these chips from excessive power damage. Figure 5 is SOA (Safe Operating Area) when restarted at short-circuit state.

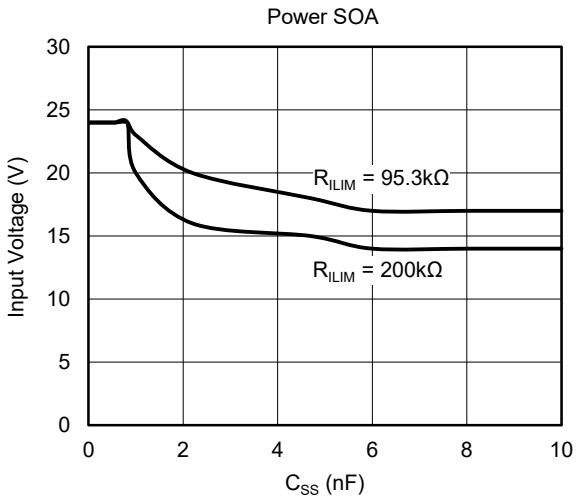

Figure 5. Power SOA

NOTES:

- C_{SS} less than 10nF is recommended when V_{IN} is between 4.5V and 12V.
- C_{SS} less than 5nF is recommended when V_{IN} is between 12V and 15V.
- C_{SS} less than 0.56nF is recommended when V_{IN} is between 15V and 24V.

Downloaded from Arrow.com.

DETAILED DESCRIPTION (continued)

Over-Current and Short-Circuit Protections

The device limits current to the output in case of output shorts and overloads. If an event occurs, device goes into current limit action, and the value of the current limit (I_{LIMIT}) is set by R_{ILIM} resistor:

SGM2521/2:

$$I_{LIMIT} = 10.95 \times 10^{-3} \times R_{ILIM} - 0.043 \quad (4)$$

$$R_{ILIM} = \frac{I_{LIMIT} + 0.043}{10.95 \times 10^{-3}} \quad (5)$$

SGM2521A/2A:

$$I_{LIMIT} = 9.78 \times 10^{-3} \times R_{ILIM} + 0.021 \quad (6)$$

$$R_{ILIM} = \frac{I_{LIMIT} - 0.021}{9.78 \times 10^{-3}} \quad (7)$$

where:
I_{LIMIT} is the value of overload current limit in A.
R_{ILIM} is the current limit programming resistor in kΩ.

In addition to the general over-current protection, the SGM2521/1A/2/2A family also integrates fast-trip over-current protection with quicker response time. Thermal stress will reduce the limited current to protect the device shown in Figure 6.

Internal current limit comparator bias voltage is set by bias current and external resistor, no noise interference and high precision resistor increase current limit accuracy.

Overload Protection

When the output load exceeds the current limit threshold, the internal current limit amplifier limits the output current to the predetermined value by increasing the on-resistance of the power switch. When continuous heavy overloads increase the power dissipation in the switch, causing the junction temperature to reach the thermal shutdown threshold, the internal N-MOSFET is turned off. The fault pin (nFLT) is asserted and will be pulled low to indicate a fault until the thermal shutdown condition is released.

Short-Circuit Protection

A transient short-circuit occurs, due to the limited bandwidth of the current limit amplifier, which cannot respond quickly to this event. The SGM2521/1A/2/2A family contains a fast-trip comparator with a threshold ($I_{FAST-TRIP}$). If $I_{OUT} > I_{FAST-TRIP}$, the comparator turns off the N-MOSFET and terminates the short-circuit peak current across the N-MOSFET rapidly. The fast-trip threshold is 1.8 times the overload current limit. The fast-trip comparator can terminate the transient short-circuit peak current, and then the current limit function limits the output current to I_{LIMIT}.

See Equation 8 for the calculation.

$$I_{FAST-TRIP} = 1.8 \times I_{LIMIT} \quad (8)$$

The $I_{FAST-TRIP}$ is fast-trip current limit.

After turning off internal power N-MOSFET for some microseconds, the device restarts to power on. The same applies to short-circuit power on condition, input current will be limited to I_{LIMIT} point.

When the switching voltage of SGM2521/1A/2/2A is more than 15V, customer should add a no more than 27V (> 0.5W) Zener diode to prevent the input voltage spike from damaging the SGM2521/1A/2/2A (as shown in Figure 3).

Startup with Output Shorted

For short-circuit power on conditions, input current will be limited to I_{LIMIT} point.

Thermal Foldback

1% to 20% current derating effectively reduces thermal dissipation and improves PCB layout flexibility.

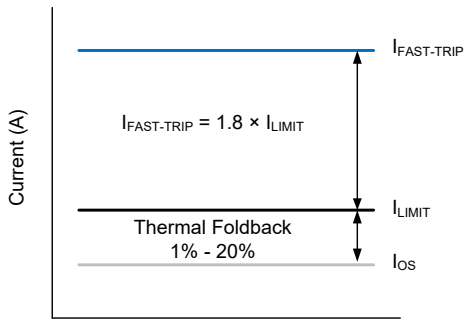

Figure 6. Over-Current Protection Levels

Downloaded from Arrow.com.

DETAILED DESCRIPTION (continued)

Fault Response

The SGM2521/1A/2/2A family has a fault output signal to indicate the operation state of the device. When any of over-voltage, under-voltage, thermal shutdown or short-circuit occurs, the nFLT pin is pulled low. The nFLT pin is open-drain output which can be connected to OUT or another external voltage through an external pull-up resistor. If not used, leave it floating or connect to GND.

IN, OUT and GND Pins

To limit the voltage drop on the input supply caused by transient inrush current when the switch turns on into a fully discharged load capacitor, a capacitor needs to be placed between IN and GND pins. Use a bypass capacitor as close as possible between IN and GND pins. In the on-state condition, V_{OUT} can be calculated using the Equation 9.

$$V_{OUT} = V_{IN} - (R_{DSON} \times I_{OUT}) \quad (9)$$

where R_{DSON} is the on-resistance of the internal FET. GND is the lowest potential of the circuit, unless otherwise noted.

Thermal Shutdown (TSD)

Thermal shutdown protects the device from excessive temperature. Once the device is shut down due to T_{SD} fault, it would either stay latch-off (SGM2522/SGM2522A) or restart automatically after T_J drops below [T_{SD} - 20℃] (SGM2521/SGM2521A).

Shutdown Control

The device has a built-in over-temperature shutdown circuitry designed to protect the internal N-MOSFETs if the junction temperature exceeds T_{SD}. The internal N-MOSFET can be remotely turned off by taking the ENUV pin below its 0.53V threshold as shown in Figure 7.

Upon releasing the ENUV pin, the device turns on with soft-start cycle.

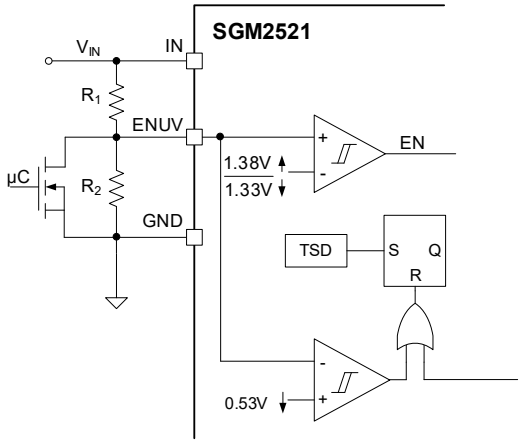

Figure 7. Shutdown Control

Operational Overview of Device Functions

The device function is shown in Table 1.

Table 1. Device Functions

Device	SGM2521/SGM2521A/SGM2522/SGM2522A
Startup	Inrush ramp controlled by SS pin via an external capacitor.
	Limit inrush current to I_{LIMIT} level.
	If $T_J > T_{SD}$, the device is shut down.
Over-Current Response	Current is limited to I_{LIMIT} level.
	Power dissipation increases as $V_{IN} - V_{OUT}$ grows
	$T_J > T_{SD}$, the device is turned off.
	SGM2522/SGM2522A remain off
	SGM2521/SGM2521A will attempt restart t_{SD_DLY} after T_J < [T_{SD} -20℃]
Short-Circuit Response	Fast shut-off when $I_{LOAD} > I_{FAST-TRIP}$
	According to the standard startup cycle, fast refresh and limit the current to I_{LIMIT}.

Downloaded from Arrow.com.

SYSTEM EXAMPLES

The SGM2521/1A/2/2A family provides a complete set of protection functions for overload or inrush current. The wide operating voltage range (4.5V to 24V) is specifically designed for many popular DC buses, and the maximum load current of 2A can meet the power delivery requirements of many devices.

Protection and Current Limit for AC/DC Power Supplies

In many small household appliances, portable devices, consumer products and other application scenarios, the primary-side power supplies and adapter are dominant. These power supplies generally have a rated power of 5W - 30W, which is generally characterized by high efficiency, low cost and few components. However, there are also the following shortcomings:

• No secondary-side protection which can stop short-circuit and other key faults immediately.

• Cannot provide precision current limit for overload transients.

• Poor ability to regulate the output voltage during sudden fluctuation of the AC input voltage, when the output over-voltage condition is triggered.

Therefore, accurate current sensing and overload protection are required for the secondary side output port in the above applications. This requires the use of precision operational amplifiers for additional circuit implementation. It adds complexity to the solution and leads to a loss of sensing. The SGM2521/1A/2/2A adopting N-MOSFET with low on-resistance is a simple and efficient solution. The typical application circuit of SGM2521/1A/2/2A is shown in Figure 8.

During short-circuit fault, the internal fast comparator shuts down the FET within 3μs (TYP) after the input current increases rapidly and exceeds $I_{FAST-TRIP}$ which is set by the external R_{ILIM} resistor.

Furthermore, the SGM2521/1A/2/2A family provides inrush current limit during the output ramp-up procedure.

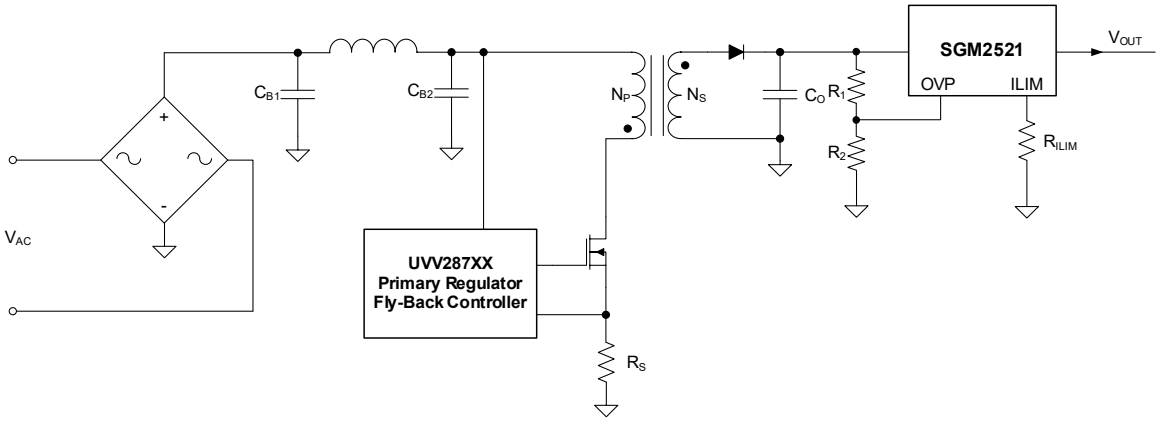

Figure 8. Current Limit and Protection for AC/DC Power Supplies

Downloaded from Arrow.com.

SYSTEM EXAMPLES (continued)

Precision Current Limit in Intrinsic Safety Applications

The safe operation of electrical and electronic equipment in dangerous area environment has a more and more urgent requirements for intensive safety (IS). IS requires that the total energy available during equipment operation is not enough to ignite the surrounding explosive environment by means of electric sparks or heat transfer. This requires precision current limits to ensure that the set current limits are not exceeded over a wide operating temperature range and variable environmental conditions. Applications such as gas analyzers, medical devices, portal industrial equipment, etc., need to meet these importance safety standards. As a simple over-voltage and over-load protection solution, the SGM2521/1A/2/2A family is applicable to each power rail inside the system application. The typical implementation circuit of SGM2521/1A/2/2A is shown in Figure 9.

Smart Load Switch

The smart load switch is a series of MOSFETs used to switch the load (resistance or capacitance). It also provides protection in case of failure. Figure 10 shows a typical discrete implementation of load switch, which requires more components and more complex circuits to achieve fault protection. The SGM2521/1A/2/2A can be used as a load switch for the applications whose operating range is from 4.5V to 24V. Programmable current limits, programmable soft-start, over-temperature protection, fault flag and under-voltage lockout are provided in the SGM2521/1A/2/2A.

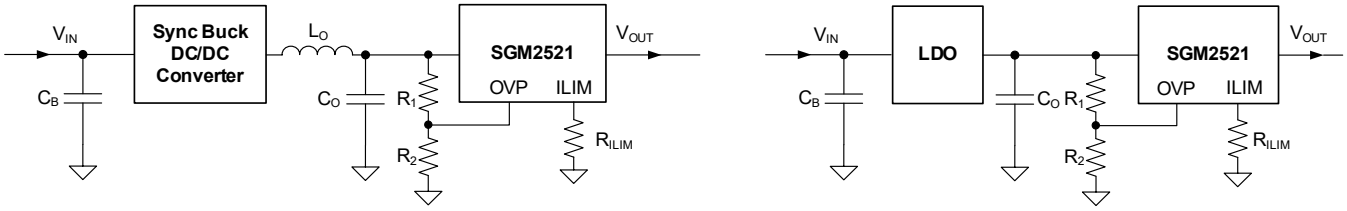

Figure 9. Precision Current Limit and Protection of Internal Rails

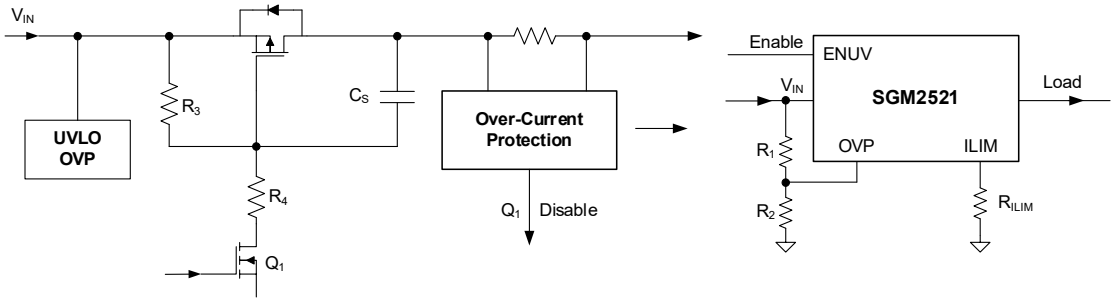

Figure 10. Smart Load Switch Implementation

Downloaded from Arrow.com.

REVISION HISTORY

NOTE: Page numbers for previous revisions may differ from page numbers in the current version.

JUNE 2026 – REV.B.2 to REV.B.3	Page
Updated Absolute Maximum Ratings section	3

DECEMBER 2025 – REV.B.1 to REV.B.2	Page
Updated Features section	1

AUGUST 2024 – REV.B to REV.B.1	Page
Added UL Recognized Component (File No. E532373*)	1
Updated Absolute Maximum Ratings section	3

FEBRUARY 2024 – REV.A.4 to REV.B	Page
Updated Detailed Description	All

FEBRUARY 2021 – REV.A.3 to REV.A.4	Page
Updated Marking Information section	2

JANUARY 2021 – REV.A.2 to REV.A.3	Page
Updated Electrical Characteristics section	4, 5

JANUARY 2020 – REV.A.1 to REV.A.2	Page
Updated Detailed Description section	13

DECEMBER 2018 – REV.A to REV.A.1	Page
Added CDM parameter	2
Changed Electrical Characteristics section	4, 5

Changes from Original to REV.A (NOVEMBER 2018)	Page
Changed from product preview to production data	All

Downloaded from Arrow.com.

PACKAGE OUTLINE DIMENSIONS

SOIC-8

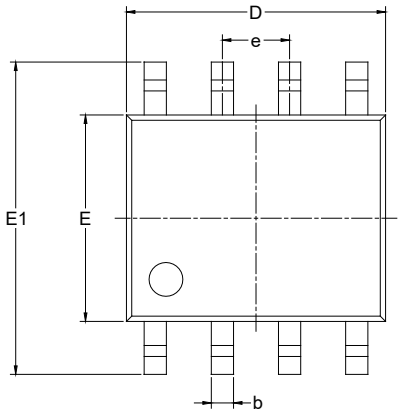

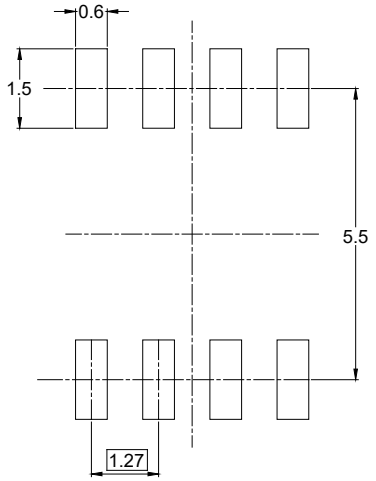

RECOMMENDED LAND PATTERN (Unit: mm)

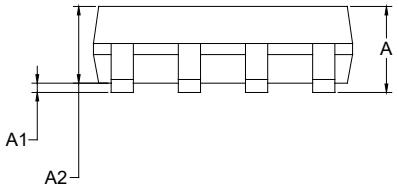

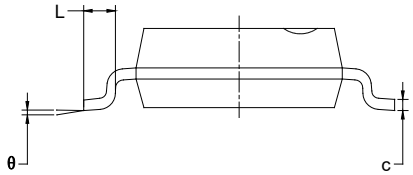

Symbol	Dimensions In Millimeters		Dimensions In Inches	
	MIN	MAX	MIN	MAX
A	1.350	1.750	0.053	0.069
A1	0.100	0.250	0.004	0.010
A2	1.350	1.550	0.053	0.061
b	0.330	0.510	0.013	0.020
c	0.170	0.250	0.006	0.010
D	4.700	5.100	0.185	0.200
E	3.800	4.000	0.150	0.157
E1	5.800	6.200	0.228	0.244
e	1.27 BSC		0.050 BSC	
L	0.400	1.270	0.016	0.050
θ	0°	8°	0°	8°

NOTES:
1. Body dimensions do not include mode flash or protrusion.
2. This drawing is subject to change without notice..

Downloaded from Arrow.com.

PACKAGE OUTLINE DIMENSIONS

TDFN-2×3-8BL

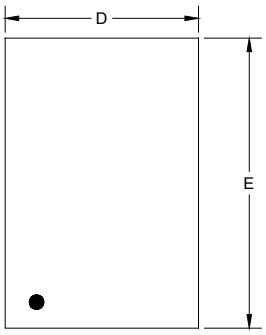

TOP VIEW

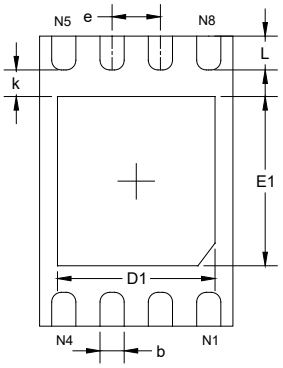

BOTTOM VIEW

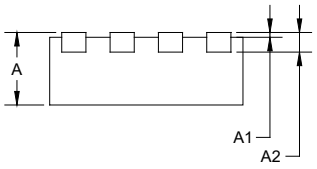

SIDE VIEW

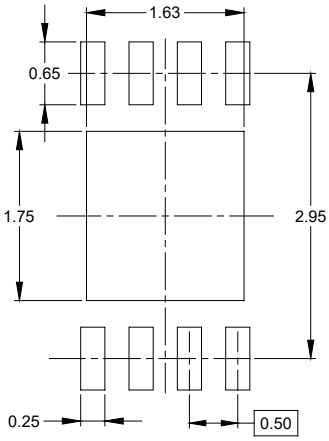

RECOMMENDED LAND PATTERN (Unit: mm)

Symbol	Dimensions In Millimeters		Dimensions In Inches	
	MIN	MAX	MIN	MAX
A	0.700	0.800	0.028	0.031
A1	0.000	0.050	0.000	0.002
A2	0.203 REF		0.008 REF	
D	1.950	2.050	0.077	0.081
D1	1.530	1.730	0.060	0.068
E	2.950	3.050	0.116	0.120
E1	1.650	1.850	0.065	0.073
b	0.200	0.300	0.008	0.012
e	0.500 BSC		0.020 BSC	
k	0.250 REF		0.010 REF	
L	0.300	0.450	0.012	0.018

NOTE: This drawing is subject to change without notice.

Downloaded from Arrow.com.

TAPE AND REEL INFORMATION

REEL DIMENSIONS

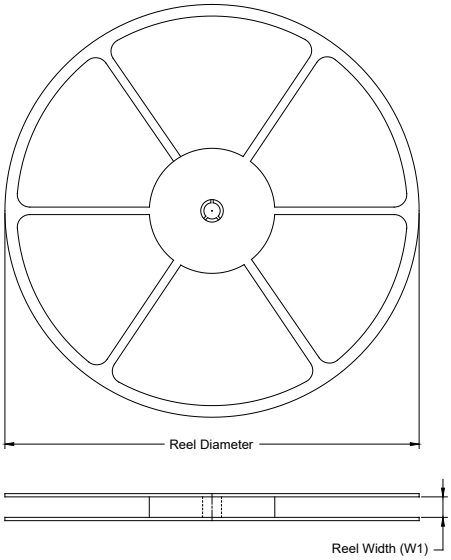

TAPE DIMENSIONS

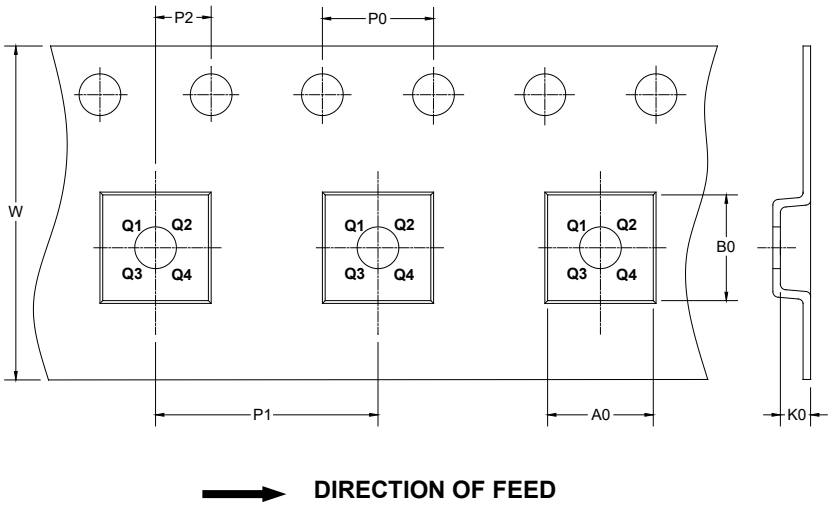

NOTE: The picture is only for reference. Please make the object as the standard.

KEY PARAMETER LIST OF TAPE AND REEL

Package Type	Reel Diameter	Reel Width W1 (mm)	A0 (mm)	B0 (mm)	K0 (mm)	P0 (mm)	P1 (mm)	P2 (mm)	W (mm)	Pin1 Quadrant
SOIC-8	13″	12.4	6.40	5.40	2.10	4.0	8.0	2.0	12.0	Q1
TDFN-2×3-8BL	7″	9.5	2.30	3.30	1.10	4.0	4.0	2.0	8.0	Q2

DD0001

Downloaded from Arrow.com.

CARTON BOX DIMENSIONS

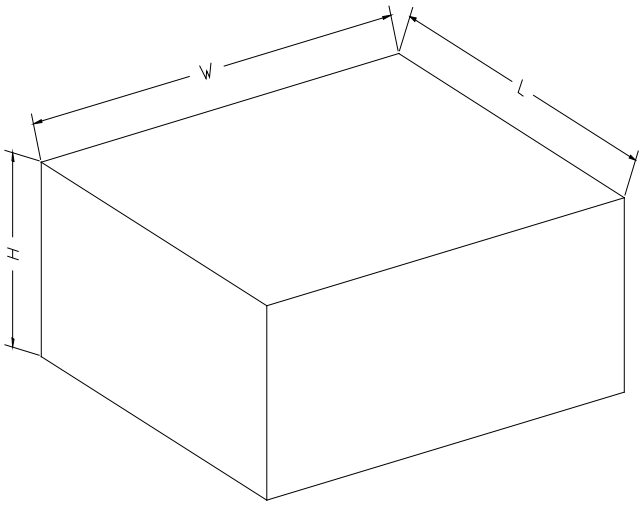

NOTE: The picture is only for reference. Please make the object as the standard.

KEY PARAMETER LIST OF CARTON BOX

Reel Type	Length (mm)	Width (mm)	Height (mm)	Pizza/Carton
7″ (Option)	368	227	224	8
7″	442	410	224	18
13″	386	280	370	5

DD0002

Downloaded from Arrow.com.