Printed Circuit Mount

MPL Series

Triple Output Transformers

For 5 VDC and ±12 VDC or ±15 VDC Regulated Power Supplies

Signal's MPL triple output transformer use hum-bucking (semi-toroidal) construction that minimizes radiated magnetic fields. These transformers are ideal for critical low-height PC board applications.

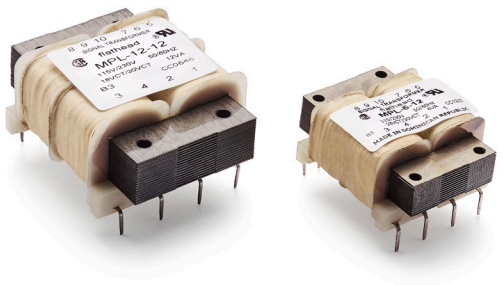

General Specifications

- Power - 6 VA and 12 VA
- Dielectric Strength - 1500 Vrms Hipot
- Primaries - Dual primaries, 115/230 V nominal, 50/60 Hz, Input range 100 V to 130 V or 200 V to 260 V
- Secondaries - Dual complementary outputs, 5 VDC with ±12 VDC or 5 VDC with ±15 VDC
- Electrostatic shield - not necessary due to split bobbin construction
- Reduced magnetic radiation
- Height - 0.85" and 1.065" high
- Insulation System - Class B, 130° C, UL 1446 E66312

Agency Certifications

- UL recognized to UL 506 / UL 5085-2, File # E63829
- CSA certified to C22.2 #66.1, File # 221070

signal TRANSFORMER a bel group

belfuse.com/signal

Downloaded from Arrow.com.

Part Number Selection

Part Number	DC Output		VA Size	Suggested Components							
Primary 50/60 Hz	Regulator I	Regulator II		C_1	C_2	C_3	C_4	D_1(2)	D_2(4)	IC_1*	IC_2*
MPL-6-12	5 VDC @ 135 mA	±12 VDC @ 40 mA	6	1000 MFD @ 20 V	2.7 MFD @ 20 V	150 MFD @ 50 V	10 MFD @ 20 V	1N4001	1N4002	LM342P-5.0	LM326N
MPL-6-15	5 VDC @ 135 mA	±15 VDC @ 35 mA	6	1000 MFD @ 20 V	2.7 MFD @ 20 V	150 MFD @ 50 V	10 MFD @ 20 V	1N4001	1N4002	LM342P-5.0	LM325N
MPL-12-12	5 VDC @ 270 mA	±12 VDC @ 85 mA	12	2100 MFD @ 30 V	2.7 MFD @ 20 V	250 MFD @ 50 V	10 MFD @ 20 V	1N4001	1N4002	LM341P-5.0	LM326N
MPL-12-15	5 VDC @ 270 mA	±15 VDC @ 70 mA	12	2100 MFD @ 30 V	2.7 MFD @ 20 V	250 MFD @ 50 V	10 MFD @ 20 V	1N4001	1N4002	LM341P-5.0	LM325N

* National Semiconductor

MPL Type

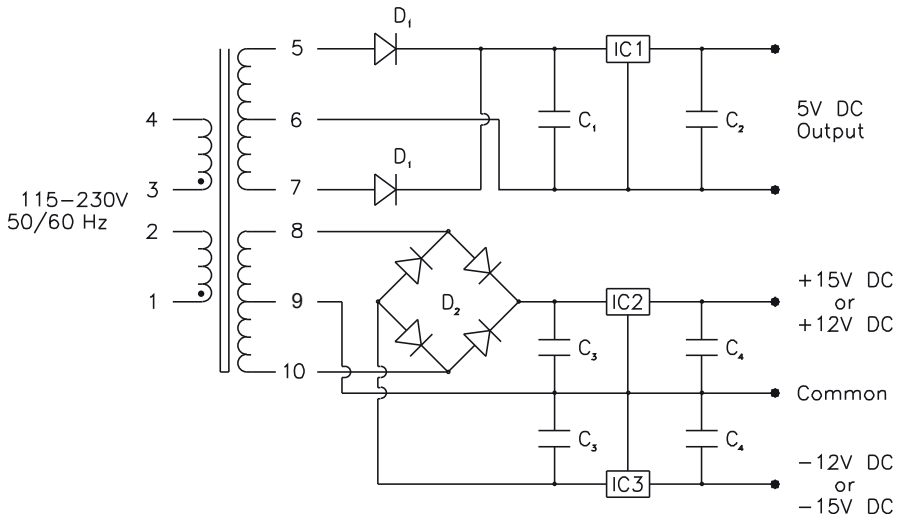

Custom versions available upon request.

128 Atlantic Avenue, Lynbrook, NY 11563
Toll Free 866-239-5777 | Tel 516-239-5777 | Fax 516-239-7208
sales@signaltransformer.com | techhelp@signaltransformer.com
belfuse.com/signal

© 2019 Signal Transformer Specifications subject to change without notice

Downloaded from Arrow.com.

Mechanical Specifications

VA	Dimensions						Weight
	L	W	H	A	B	C	
Size	Inches (mm)						lbs (kg)
6	1.87 (47.6)	1.56 (39.7)	0.85 (21.6)	1.60 (40.6)	0.37 (9.5)	0.18 (4.7)	0.43 (0.20)
12	2.50 (63.5)	2.00 (50.8)	1.06 (27.1)	2.00 (50.8)	0.50 (12.7)	0.25 (6.4)	0.68 (0.31)

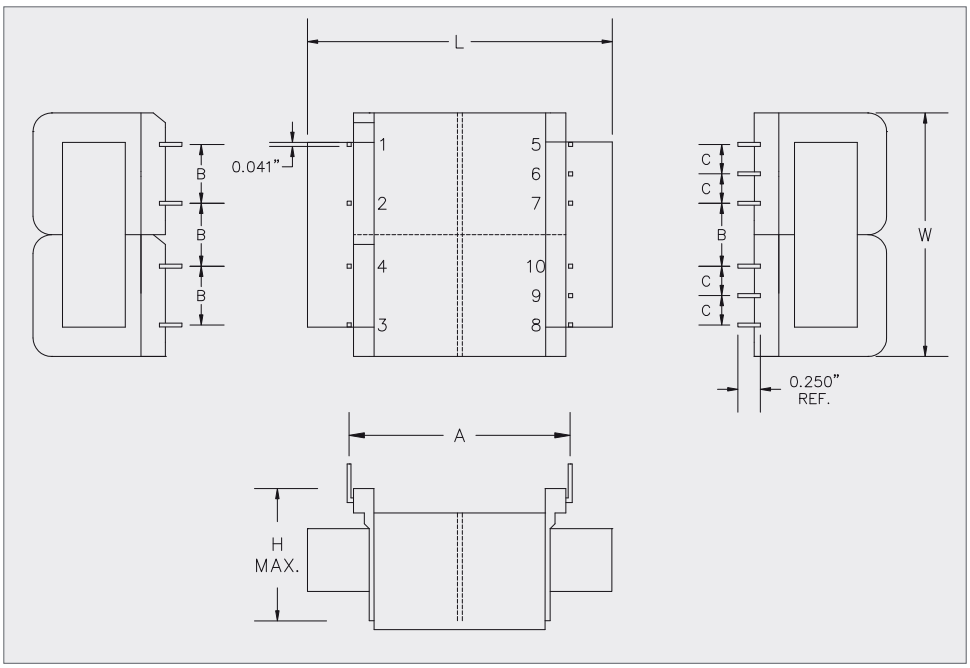

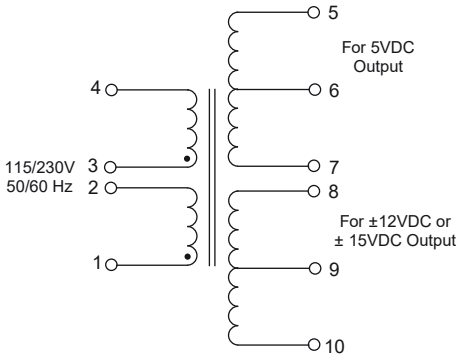

• Indicates like polarity

Custom versions available upon request.

signal TRANSFORMER
a bel group

128 Atlantic Avenue, Lynbrook, NY 11563
Toll Free 866-239-5777 | Tel 516-239-5777 | Fax 516-239-7208
sales@signaltransformer.com | techhelp@signaltransformer.com
belfuse.com/signal

© 2019 Signal Transformer Specifications subject to change without notice

Downloaded from Arrow.com.