Connector Location A

Connector Location B

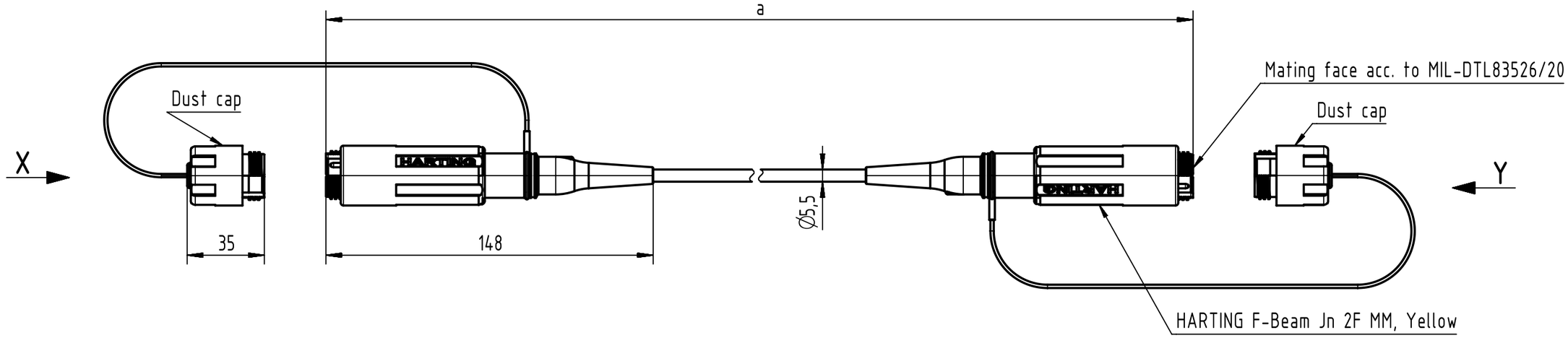

X
male
(without dust cap)

Y
male
(without dust cap)

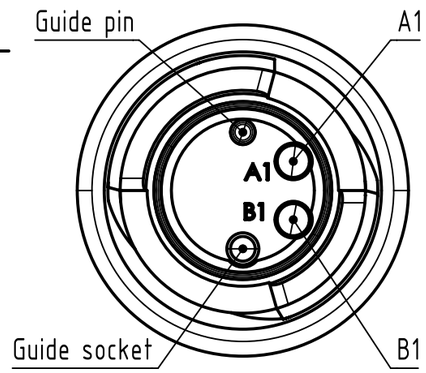

Loading Plan

A1 —— blue —— B1

B1 —— orange —— A1

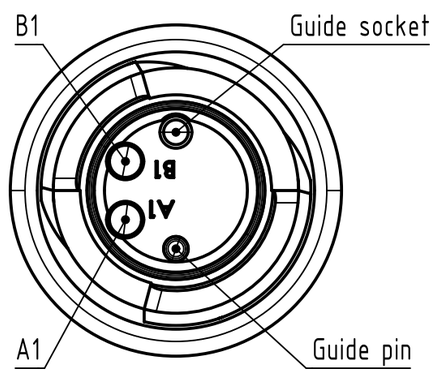

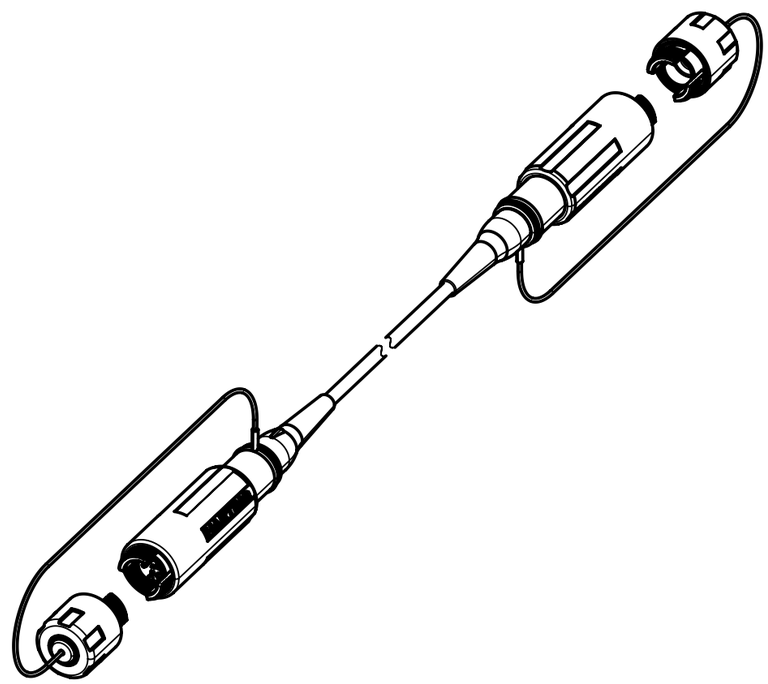

Cont. no.	Part no.	Type of cable	Dim. a[m]
8	33042115000001	FO cable, multi-mode, 4G50/125 OM3 5.5mm, PUR, yellow	500
7	33042112500001		250
6	33042112000001		200
5	33042111500001		150
4	33042111000001		100
3	33042110500001		50
2	33042110250001		25
1	33042110100001		10

All Dimensions in mm | Tech. Character. | Free size tol. | According to production drawing

All rights reserved

Department HCS - RO

HARTING Customised Solutions
D-32339 Espelkamp

Created by	Inspected by	Standardisation	Date	State
BANCIUD Banciu	COSTEA Costea	MUNTEANV Munteanu	2019-04-01	Final Release

Title: FO-EB-Assy 2Ch, 50µm OM3 YE Ø5.5

Doc-Key / ECM-Nr.: 100659686/UGD/024/C 500000149827

Type: TB | Number: 3304211XXX0001 | Rev.: C | Page: 1/1

A3

Downloaded from Arrow.com.