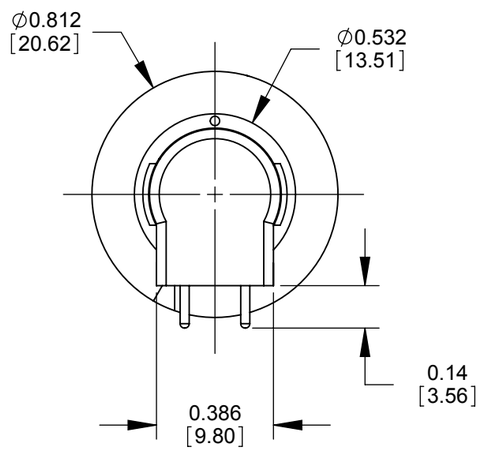

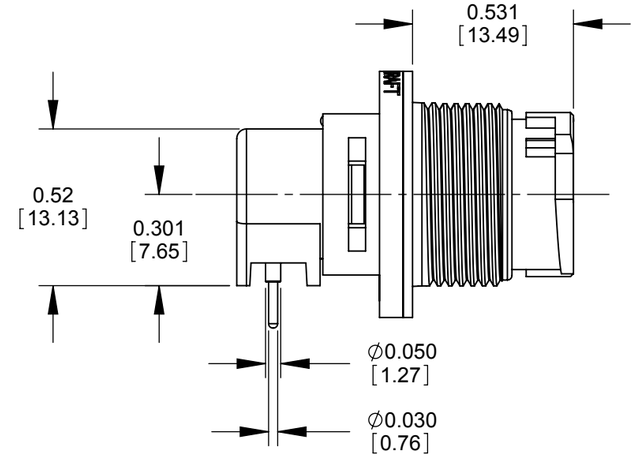

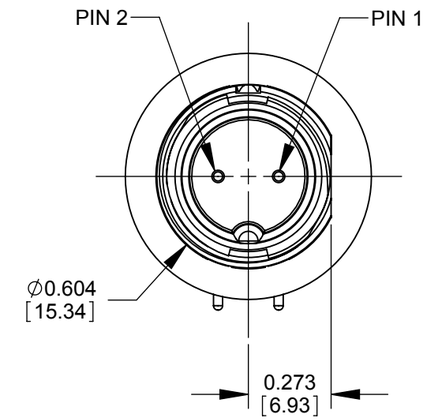

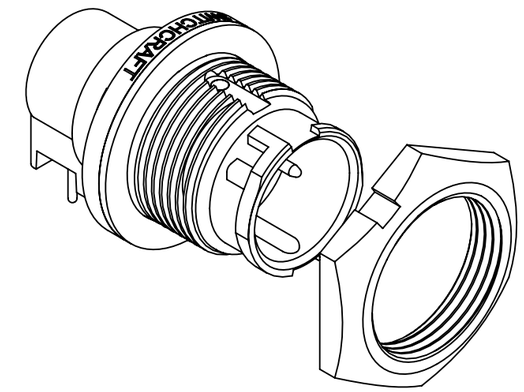

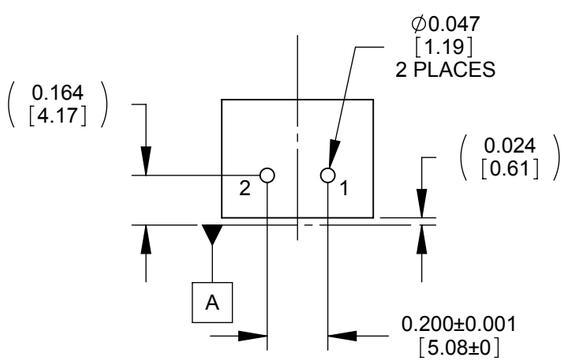

RECOMMENDED PCB LAYOUT
(COMPONENT SIDE)

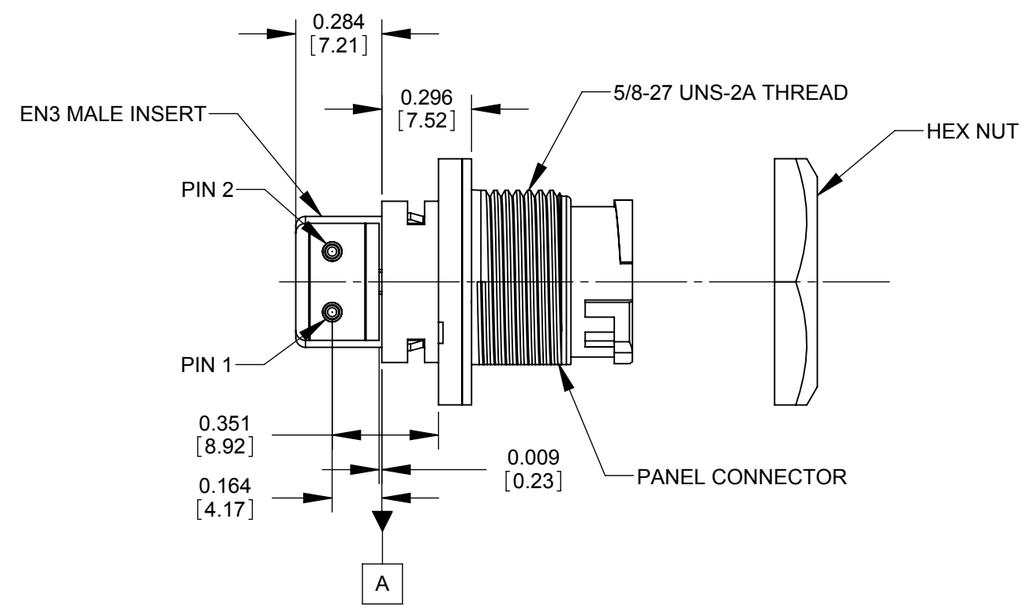

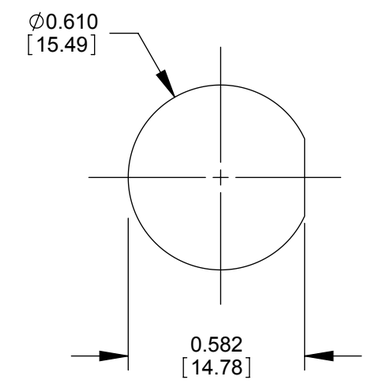

RECOMMENDED
PANEL CUTOUT

NOTES:

1. MATERIALS:

   CONTACTS: COPPER BASE ALLOY, GOLD PLATED

   RA MALE INSERT, CONNECTOR SHELL: THERMOPLASTIC

   CONNECTOR SHELL INTERIOR: THERMOPLASTIC RUBBER

   HEX NUT: THERMOPLASTIC (SHIPPED UNASSEMBLED)

2. THIS PRODUCT IS RoHS COMPLIANT.

CUSTOMER DRAWING

REV	ECO NUMBER	DATE	BY	APVD
A	26354	8/6/08	JGK	TJK

REVISIONS

UNLESS OTHERWISE SPECIFIED

1. ALL DIMENSIONS IN INCHES
   - TWO PLACE DECIMALS ±0.02
   - THREE PLACE DECIMALS ±0.005

DO NOT SCALE DRAWING

THIS DRAWING DESCRIBES A DESIGN CONSIDERED PROPRIETARY IN NATURE, DEVELOPED AND MANUFACTURED BY SWITCHCRAFT INC. AND IS RELEASED ON A CONFIDENTIAL BASIS FOR IDENTIFICATION PURPOSES ONLY.

SIZE	WIDTH	MULT	LBS/M	TEMPER

FINISH
SPEC No.

MATERIAL
SPEC No.

FIRST USED ON

SCALE 2:1

DATE DRAWN	BY	CHKD	APVD
7/24/06	SRC	JGK 3/25/10	TJK 3/25/10

Switchcraft®

SHEET 1 OF 1

NAME
EN3 MALE, 2 PIN RAPC, RoHS

PART No.
EN3P2MRAPCX

REV
A

SolidWorks CAD File B

Downloaded from Arrow.com.