FDSE Series
Micro Mini Angled Actuated Detect Switches

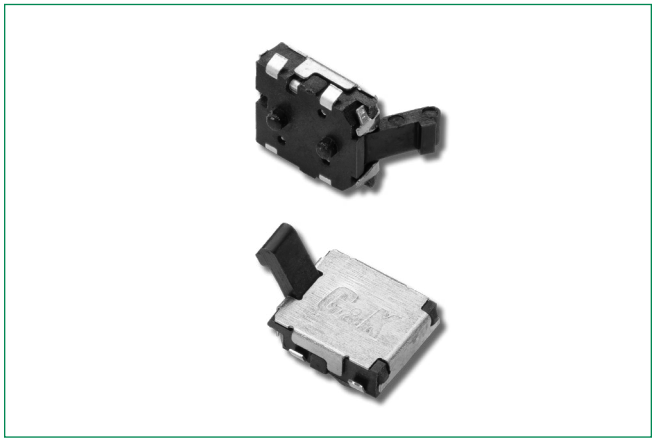

Description

The FDSE series are really miniature in package size which allow for applications that require angled detection. It is mounted on PCB and typical applications are consumer electronics and medical devices.

Features & Benefits

- Extremely small package size
- Angled actuation
- Flat or bending terminations
- Long travel type
- RoHS compatible and compliant

Applications

- Consumer electronics
- Medical devices
- Safety control devices

Specifications

Contact Rating	100 µA @ 3VDC, 1 mA @ 5 VDC
Mechanical/Electrical Life	50,000 operations
Contact Resistance	3 Ω max.
Insulation Resistance	100 M Ω min. 100 VDC
Dielectric Strength	100 VAC @ 1 minute
Operating Temperature	-40°C to 85°C
Operating Force	35gf max.
Travel	3.14 mm or 60°
Solderability	According to lead free solder profiles
Packaging	2,000 pieces per reel

Materials

Base	PA9T
Cover	C7701R
Actuator	PA46
Movable Contact	Beryllium Copper
Terminals	Phosphor Bronze, Ag over Ni Plating

Ordering Number

Complete part numbers for FDSE Series are shown below.

FDSE - x - R

Series
FDSE: SPST N.C.

Actuator
001: Angle Actuated Detect Switch Bended Terminal
002: Angle Actuated Detect Switch Flat Terminal

Package
R: Tape & Reel

© 2024 Littelfuse, Inc.
Specifications are subject to change without notice.
Revised: CM.02/13/24

Downloaded from Arrow.com.

FDSE Series
Micro Mini Angled Actuated Detect Switches

FDSE001R (in mm)

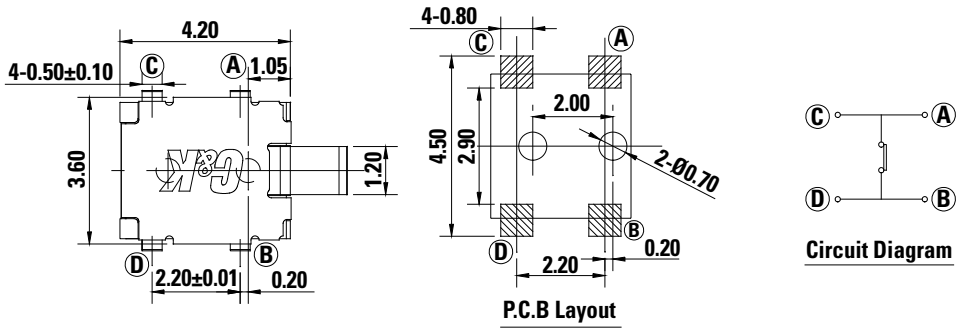

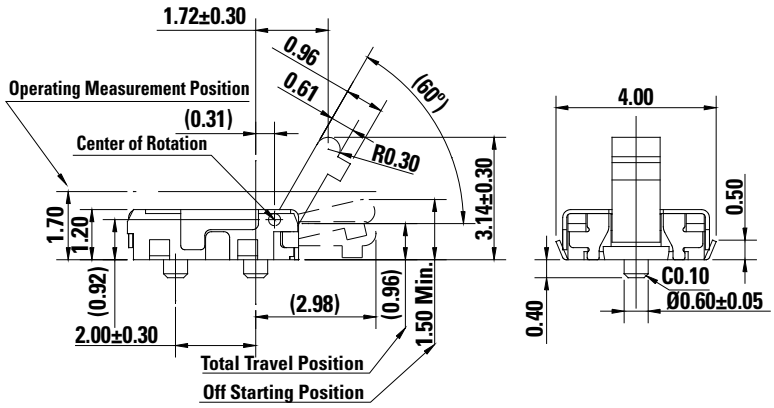

FDSE002R (in mm)

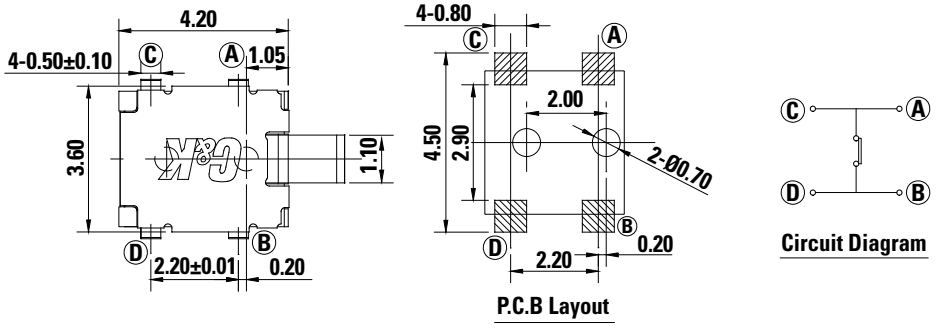

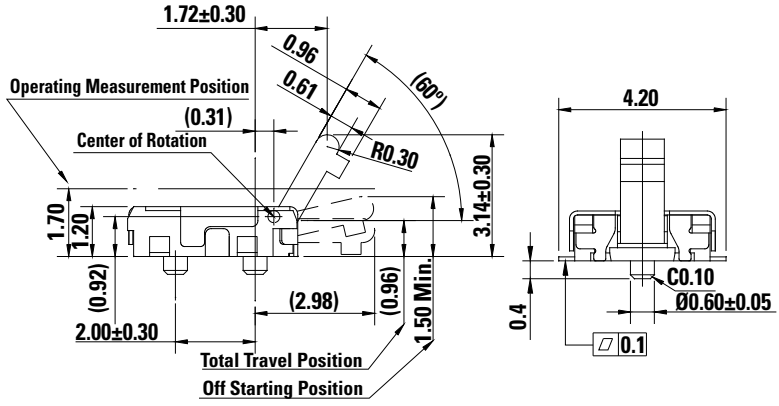

© 2024 Littelfuse, Inc.
Specifications are subject to change without notice.
Revised: CM.02/13/24

Downloaded from Arrow.com.

FDSE Series
Micro Mini Angled Actuated Detect Switches

Tape & Reel (in mm)

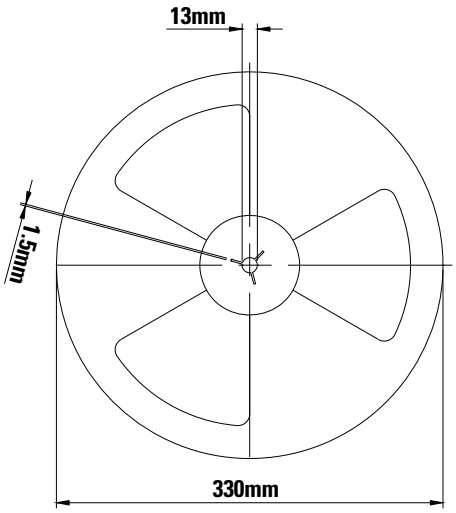

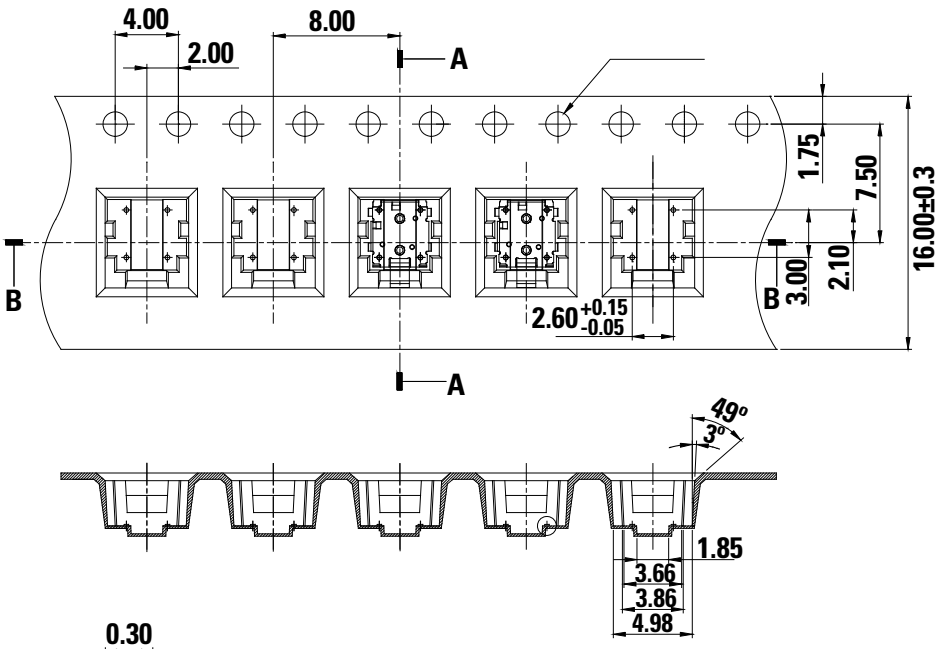

Section B-B

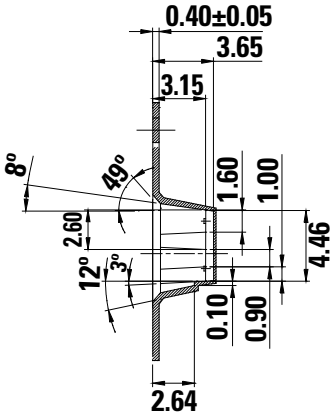

Section A-A

Disclaimer Notice - Information furnished is believed to be accurate and reliable. However, users should independently evaluate the suitability of and test each product selected for their own applications. Littelfuse products are not designed for, and may not be used in, all applications. Read complete Disclaimer Notice at http://www.littelfuse.com/disclaimer-electronics.

© 2024 Littelfuse, Inc.
Specifications are subject to change without notice.
Revised: CM.02/13/24

Downloaded from Arrow.com.