Fuji Electric

Innovating Energy Technology

Magnetic motor starters
SW series

Enclosed with pushbuttons

Magnetic contactors
SC series

Solid-state contactors

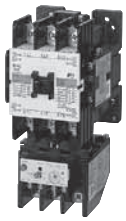

Magnetic motor starters
SW series

■ MAGNETIC CONTACTORS AND STARTERS

■ THERMAL OVERLOAD RELAYS

■ SOLID-STATE CONTACTORS

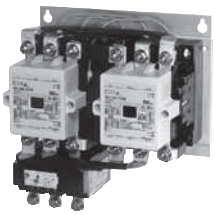

Reversing motor starters
SW series

LOW
VOLTAGE
EQUIPMENT
Up to 600 Volts

Solid-state contactors

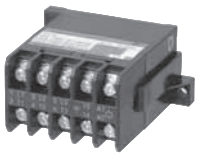

Magnetic contactors
FC series

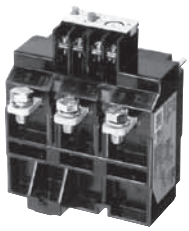

Thermal overload relays

INDIVIDUAL CATALOG 01

from D&C CATALOG 20th Edition

01 02 03 04 05 06 07 08 09 10 11 12

Fuji Electric FA Components & Systems Co., Ltd.

Downloaded from Arrow.com.

Magnetic Contactors and Starters

SC and SW series
Design features

SC-03, 0, 05, 4-0, 4-1, 5-1
SC-N1, N2, N2S, N3

Description

Small frame contactors with new functions join the SC series.
The SC line up, which is based on high level technology, now extends from the SC-03 to the SC-N16.
The SC series contactors have such options as additional auxiliary contact blocks and operation counter unit with snap-on fittings, and coil surge suppressors. Modification can be made quickly and easily on site.

Improved contact materials and structure double the electrical life compared with existing contactors 2 million operations.
Bifurcated type auxiliary contacts have a high degree of contact reliability.
Therefore, they can be used in low-level circuits of 5V, 3mA and directly input to electronic equipment.

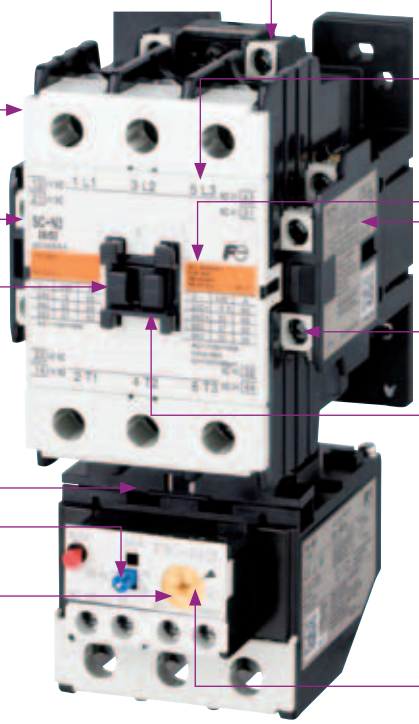

Long electrical life
2 million operations (AC-3 duty)

Easy-to-read front display
Type, ratings and terminal numbers

Manual operator for easy circuit checking
ON-OFF status indicator

Direct-fitted overload relay assures time-saving assembly

Manual reset button

Dial protection cover prevents unauthorized current setting

Single-side-mounted coil terminal
The coil surge suppressor or coil drive unit can be easily added

Terminal numbers meet IEC standards

Meets international standards
IEC, NEMA, BS, JIS, VDE
UL, CSA, NK, BV and LR approved

Bifurcated auxiliary contact with high contact reliability

Optional function unit can be easily added to modify contactor immediately on site.
- Auxiliary contact block fits all size contactors(03 to N3)
- Snap-on mechanical interlock unit can be fixed to equal or unequal size contactors without tools.
- Front-mounted operation counter

Exact current setting possible

Downloaded from Arrow.com.

Easy modular system

Side mounting

Auxiliary contact block
Single pole (1NO + 1NC)

Mechanical interlock unit

The mechanical interlock unit is used to interlock two contactors for reversing. One size fits all contactors.

Main circuit surge suppression unit

This unit prevents miss-operation of electronic controllers due to motor surge voltages.

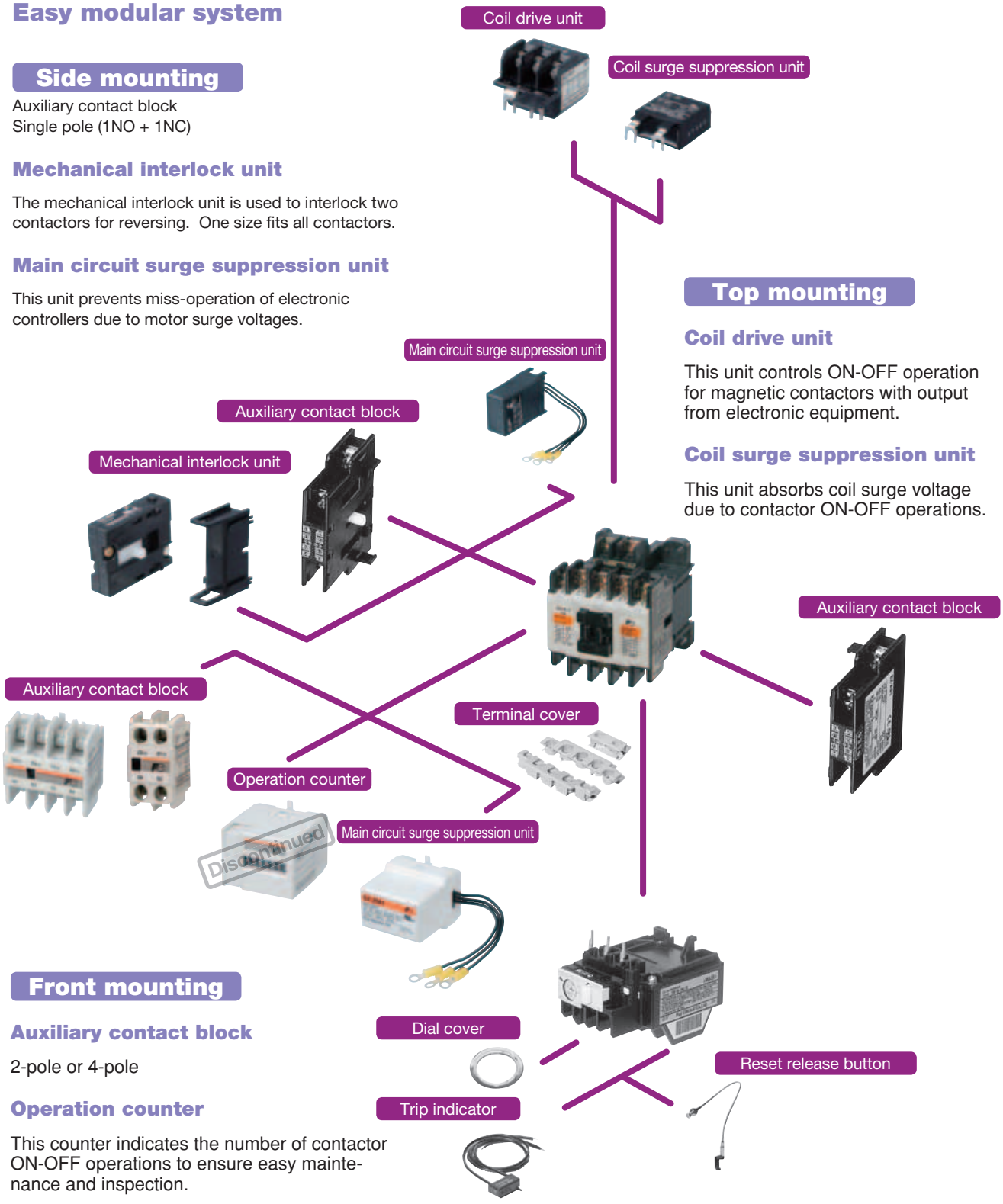

Top mounting

Coil drive unit

This unit controls ON-OFF operation for magnetic contactors with output from electronic equipment.

Coil surge suppression unit

This unit absorbs coil surge voltage due to contactor ON-OFF operations.

Front mounting

Auxiliary contact block

2-pole or 4-pole

Operation counter

This counter indicates the number of contactor ON-OFF operations to ensure easy maintenance and inspection.

Main circuit surge suppression unit

Further information

See page 01/69

Downloaded from Arrow.com.

Magnetic Contactors and Starters

SC and SW series Design features

SC-N1 to N16

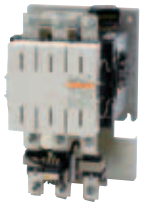

Description

FUJI SC series (SC-N6 to N16) contactors have been developed and manufactured using FUJI's most advanced electronic technologies. They employ an electronically-controlled SUPER MAGNET which is provided with a built-in IC, thus enhancing their performance and reliability. The SUPER MAGNET is based on an "AC-input, DC-operated concept", thus allowing the coil to be energized by both AC and DC input. Moreover, once closed, sealed current is controlled by switching circuit. This permits a great reduction in power consumption – a cost-effective feature.
The SC-N1 to SC-N5A do not have the SUPER MAGNET. These contactors feature compact size, arc extinguishing mechanisms with a high breaking efficiency, low power consumption, easy operation, and ratings up to 660 volts.

Features of the SUPER MAGNET

- Operates on both AC and DC power supply
- Has a wide operational voltage range
- No tendency to "chatter"
- Eliminates contact welding or coil burning
- Reduces power consumption

  In addition the FUJI SC-N series contactors employ bifurcated auxiliary contacts which improve contact performance and permit them to be used in conjunction with programmable logic controllers.
  FUJI SC-N series contactors are the most suitable for new FA age applications which require the most advanced electronic technologies and maximum dependability.

The FUJI SC series conforms to and has been approved by various international standards.

Specifications			Contactors		Starters(open)	
			Non-reversing	reversing	Non-reversing	reversing
No.of thermal overload relay heater elements			-	-	3	3
Type			SC-□	SC-□RM	SW-□/3H	SW-□RM/3H
Conformed	New JIS	Japan	●	●	●	●
	IEC	International	●	●	●	●
	BS	UK	●	●	●	●
	EN	Europe	●	●	●	●
Approved	UL	USA	●	●	●	●
	CSA	Canada	●	●	●	●
	CCC	China	● *	● *	–	–
EC Directives	CE Marking	Europe	●	●	●	●
Inspection Institute	TÜV	Germany	●	●	●	●

Notes

● : Conforming to Standard
c UL us : A new certification mark that indicates compliance with both Canadian and U.S.requirements.
□ : Frame size N1 to N14 and N16(Contactor only)
* : When ordering the ccc standard type, add(ccc)suffix to the type number.

Downloaded from Arrow.com.

Advantages of SUPER MAGNET

● Positive pick-up and drop-out

The SUPER MAGNET operation is electronically controlled. There is no unstable zone as will be seen in the diagram–an outstanding feature that other contactors can not provide. Chattering is a phenomenon which occurs when the gravitational force of the starter magnet decreases through the line voltage drop at the time of motor starting. This may cause damage such as contact welding or coil burning.
The SUPER MAGNET holds without chattering even if the line voltage drops to 65% of its rated value, so preventing this type of trouble.

IC-controlled SUPER MAGNET

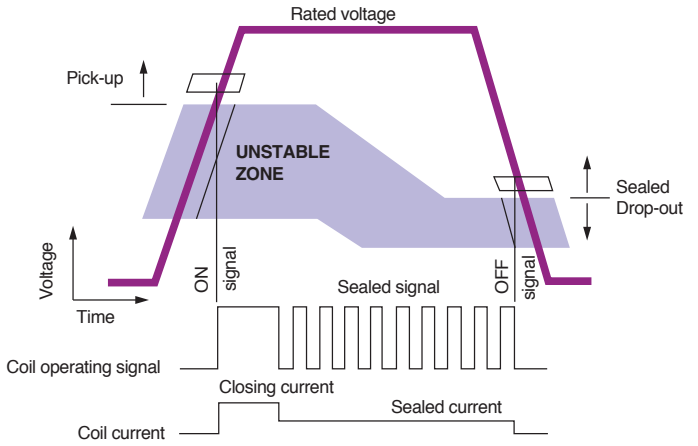

Note: Unstable zone
In this zone contact welding and coil burning frequency occur due to voltage drop.

Motor starting

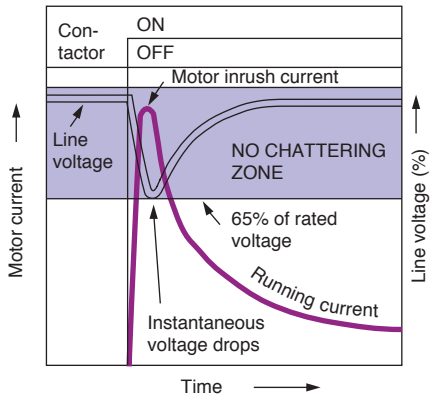

Note: No chattering occurs even if instantaneous voltage drops to 65% of rated voltage.

Existing series

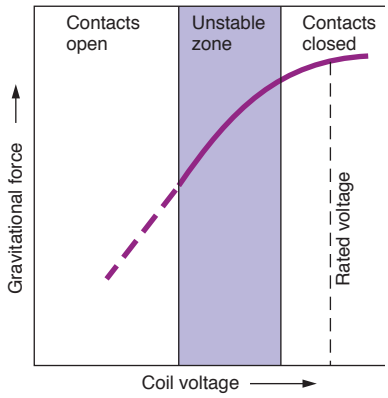

SC-N series

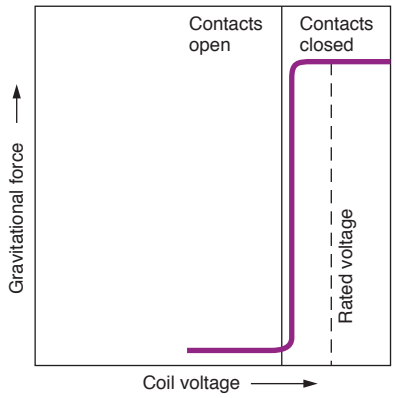

Note: Since SC series contactors are electronically controlled there is no unstable zone.

● Operation on both AC and DC inputs

The rated operational voltage range of the SC-N series contactors has been greatly expanded.
They operate on both AC (50/60Hz) and DC inputs.

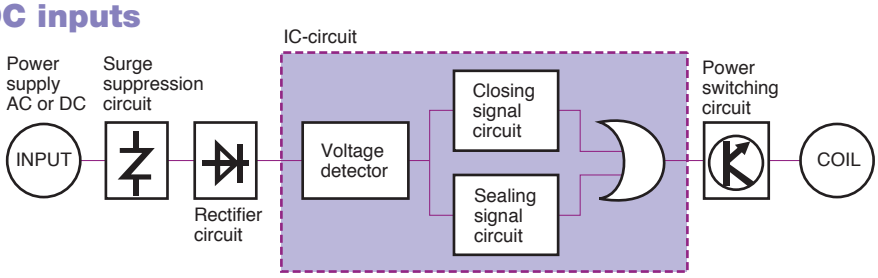

Coils (SC-N6 to SC-N16)

Rated voltage	Rated coil voltage, frequency	
	AC	DC
24V	24–25V 50/60 Hz	24V
48V	48–50V 50/60 Hz	48V
100V	100–127V 50/60 Hz	100–120V *1
200V	200–250V 50/60 Hz	200–240V *2
300V	265–347V 50/60 Hz	–
400V	380–450V 50/60 Hz	–
500V	460–575V 50/60 Hz	–

Notes:SC-N6 to N12: 24V–575V
SC-N14 to N16: 100V–575V
*1 : The coil voltage from a DC power supply with single phase full-wave rectification will be 100 to 110 V.
*2 : The coil voltage from a DC power supply with single phase full-wave rectification will be 200 to 220 V.

Operation

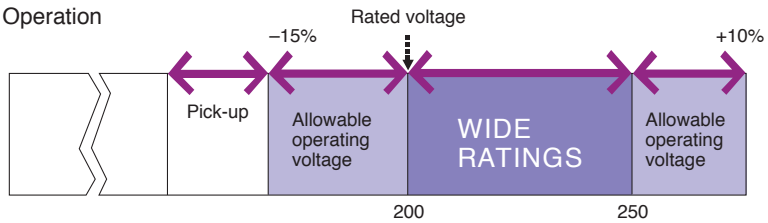

Example: Coil voltage 200 volts use with AC circuit 50 or 60Hz

For further information

See page 01/22

Downloaded from Arrow.com.

Magnetic Contactors and Starters
SC and SW series
Design features

Safety

Terminal cover for finger protection

These optional terminal covers comply with VBG4 (German Rules of Accident Prevention), IEC60529, DIN57106, VDE0106 Teil100, which are recommendations for preventing exposure to live parts.
The terminal cover satisfies the requirements of Machinery Directive EN60204-1 “Direct Contact Prevention” concerning mechanical safety.

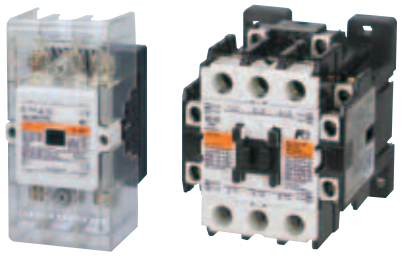

Insulation
Improved tracking resistance

Tracking resistance of the molded parts comprising of the conductive block has been improved.
Comparative Tracking Index (CTI) : 175V or higher

Tracking : It means the route of the leak electric current caused on the surface of the isolation body.

Standard heat-proof material

The molded parts used are made of heat-proof materials specified in UL94 (UL94 : STANDARD FOR SAFETY FOR TESTS FOR FLAMMABILITY OF PLASTIC MATERIALS FOR PARTS IN DEVICES AND APPLIANCES).

Mirror contacts (Positively safety contacts)

The contactor with mirror contacts has been certified by TÜV.
Mirror contact conforms to the requirement for auxiliary contact that is intended to be included in the future amendment to IEC 60947-4-1.
Mirror contact : Normally closed auxiliary contact,which cannot be in closed position simultaneously with the normally open main contact.

Free arc space
A new arc-extinguishing method, which makes full use of magnetic field analysis technology, and a new material (UL94V-0) that has been incorporated into the design of this new type of arc-extinguishing chamber to provide a free arc space. This new method and design reduces the depth size, not only of the main body, but also that of the board (Types SC-N1 to N12).

Free arc space : It means arc space is not needed on making and breaking condition according to IEC 60947-4-1. (Refer to chart Arcing gas cooling block.)

Arc driving system (explanation only)

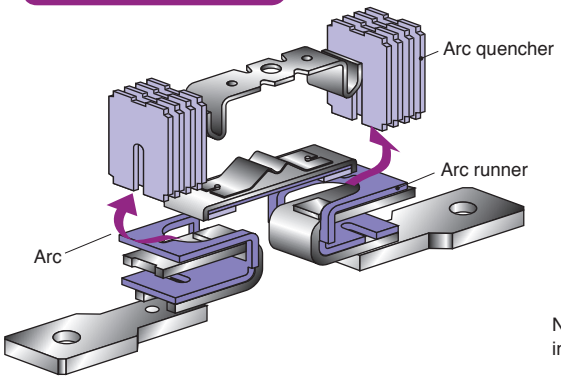

Arc gas cooling system (explanation only)

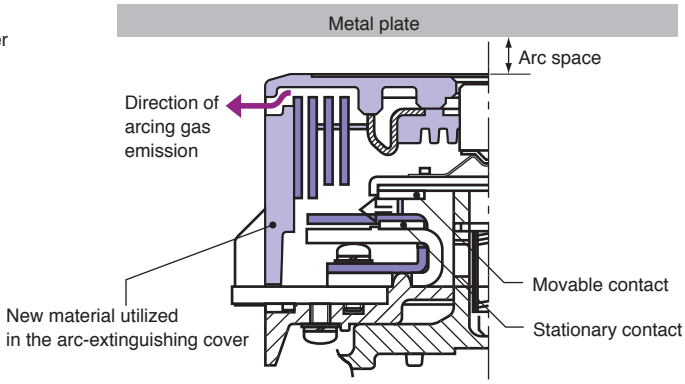

Downloaded from Arrow.com.

Utility

Special type "/G" for DC operation added to SC-N1 to N5 series

A new type of "/G" has been added to SC-N1 to N5 types for DC operation.
Power input and consumption have been considerably reduced by introducing a full voltage-applying coil.

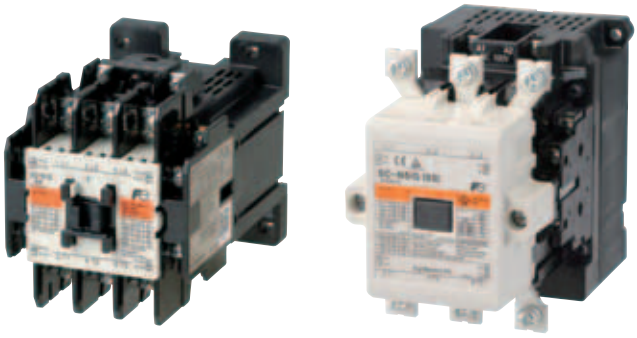

Bifurcated auxiliary contact system

Bifurcated auxiliary contact system
By employing a bifurcated contact system, higher contact reliability is achieved for service at 5V DC, 3mA (Types SC-N1 to N12).

Ecology

Motor starter manufactured at ISO9001 and ISO14001-certified factory

Fuji Electric has been certified for both ISO9000 series and ISO14000 series compliance. Both standards are established by the International Organization for Standardization (ISO). The former is for quality control and quality assurance, while the latter is for environmental management systems. Certified for ISO9001 and ISO14001, our Fukiage Factry, which manufactures motor starters, puts great effort into establishing a highly reliable quality assurance system and a development and production structure which takes environmental protection into account.

Reducing Power Consumption

The use of a new type of super magnet that applies 3D magnetic field analysis has enabled greatly reducing power consumption.
This reduces CO_2 emissions by 33% over products with AC coils (average for SC-N1/SE to N5 (inhouse comparison)).

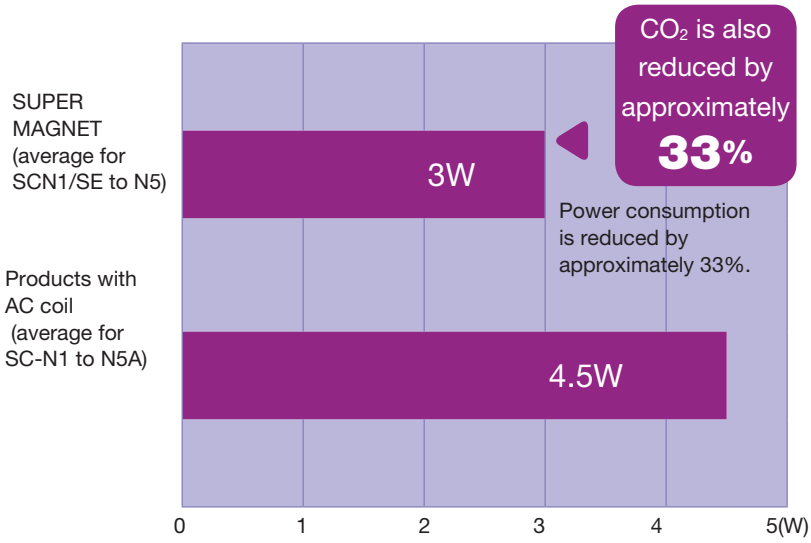

Downloaded from Arrow.com.

Magnetic Contactors and Starters
General information

■ Overview of Product Series

Series		Page	Features	Main models and model numbers	
SC Series (Basic Series)	Magnetic Contactors and Starters 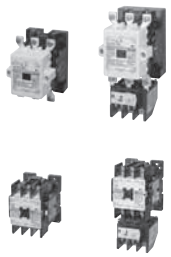 (No.KK04-090,491KK05-053, 056)	01/1 ∫ 01/65	• Electrical life: 2,000,000 operations (SC-N3 or smaller) • Bifurcated auxiliary contacts for greater reliability • Compliance with international standards (UL, CSA, IEC, LR, BV, etc.) • Easier to use (structured to enable easy coil replacement). • High operating reliability due to a super magnet with built-in IC (SC-N6 or larger). (Prevents coil burning due to voltage fluctuations and contact fusing due to floppy operation; enables using the same coils for AC/DC, increases the range, reduces switching noise, etc.) • Mirror contacts are a standard feature. • A wide range of options	Models • Standard type • Reversible type • DC-operating type • Mechanical-latch type • Heavy starting duty type • With quick operating type thermal relay • With 2E thermal relay • With 3E relay	Type **SC-□, SW-□** **SC-□RM, SW-□RM** **SC-□/G, SW-□/G,** **SC-□/SE, SW-□/SE** **SC-□/V, /VG,VS** **SW-□/3L** **SW-□/3Q** **SW-□/2E** **SW-□/2E＋QE-20N**
	Optional Units (No.KKD06-013, 021)	01/66 ∫ 01/77	• Greatly increase the functionality of Magnetic Switches. • Unit construction for easy installation. • Three-direction Units that switch between front-on, side-on, and top-on operation depending on the mounting direction.	Models Auxiliary contact block Operation counter unit Main circuit surge suppression unit Mechanical interlock unit Power connection kit for reversing Coil drive unit for IC output 3-pole parallel plate terminal Coil surge suppression unit Base unit for separate mounting	Type **SZ-A□** **SZ-J□** Discontinued **SZ-ZM□** **SZ-RM** **SZ-RW□** **SZ-CD□** **SZ-SP□** **SZ-Z□** **SZ-H□**
SB Series	DC Magnetic Contactors (No.KKD06-013, 021)	01/78 ∫ 01/80	• Ideal for DC motor control and DC circuits of 360 A or less. • Compact and lightweight. • Models available with DPST-NO/SPST-NC main contacts with NC contacts for a dynamic brake. • 5N and larger models feature a super magnet with a built-in IC for high operation reliability. • UL/CSA-compliant models are also available.	Models Standard type DC-operating type Standard type with DPST-NO/SPST-NC contacts DC-operating type with DPST-NO/SPST-NC contacts	Type **SB-□** **SB-2N/SE,** Discontinued **SB-□** **SB-□B** **SB-2NB/SE,** Discontinued **SB-□B**

FC Series	Magnetic Contactors and Starters
	 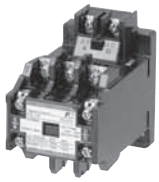
	(No.KKD05-266)
		01/81 ∫ 01/87	• The best in durability, easy-to-use performance.
			  • Compact: 2/3 or previous models
			  • Electrical durability: 250000
			  • Mechanical durability: 1 million
			• Various terminal types available (0 type).
			  • Screw terminals (Standard type)
			  • Tab terminals
			  • P.C. board direct-mounting terminals
			• Low-voltage-operating type: For the minimum operating voltage, stable operation is possible even if voltage drops to 75% of the rated voltage or 70% of the rated voltage when main contacts are in contact.
			• UL/TUV-compliant models are also available.
				Models
				Standard type
				Tab terminal type
				P.C.board direct-mounting type
				DC-operating type
				Enclosed type
				Magnetic switch with pushbutton
					Type
					FC-□, FW-□
					FC-0T
					FC-0A
					FC-□/G
					FW-□C
					FW-□P

Downloaded from Arrow.com.

Frame size	03	0	05	4-0	4-1	5-1	N1	N2	N2S	N3	N4	N5	N6	N7	N8	N10	N11	N12	N14	N16
Rated current (A)	11	13	13	18	19	19	26	35	50	65	80	93	125	152	180	220	300	400	600	800

*1

*1

*1 Magnetic Contactors only

Overview	Models	Type	Overview
Enables easily adding auxiliary contacts.	Trip indicator	**SZ-L□**	Indicates the tripping status of the thermal relay.
Displays the number of switching operations of the Magnetic Contactor.	Reset release button	**SZ-R□**	Used for remote control of thermal relay resetting.
Protects a three-phase motor from surge voltages.	Dial cover	**SZ-DA**	Prevents changes to the current setting of thermal relay.
Used to interlock a reversible Magnetic Switch.	Terminal cover	**SZ-T□**	Prevents exposure of charged terminal section.
Used to wire the main circuits of a reversing contactors and starters.	Live-section cover	**SZ-JC□, SZ-JW□, SZ-□J**	Prevents exposure of charged terminal section.
Enables driving a coil with a transistor output.	Insulation barrier	**SZ-B□**	Prevents exposure of charged terminal section and short-circuits between phases.
Used to assemble a stand-alone, resistive-load Magnetic Contactor.	Contact protector	**SZ-RC□** Discontinued	Prevents contact wear cause by material transfer.
Provides protection against surge voltages with the coil is turned OFF.	Fault detector unit	**SZ-F-□/M**	Detects errors in the voltage across the load.
Used to assemble a stand-alone Thermal Relay.	OFF-delay release unit	**SZ-□/DE**	Holds the closed-circuit status during momentary power interruptions.

Frame size	2N	2N/SE	5N	6N	10N	11N	—	—	—	—	—	—	—	—	—	—
Rated current (A)	35	35	85	120	200	290	—	—	—	—	—	—	—	—	—	—

Discontinued

Frame size	0A	0T	0	0S	1	1S	2S	3	4	—	—	—	—	—	—	—
Rated current (A)	8	12	12	15	20	26	35	50	65	—	—	—	—	—	—	—

Downloaded from Arrow.com.

■ Overview of Product Series

Series		Page	Features	Main models and types	
				Models	Type
TR/TK Series	Thermal overload Relays 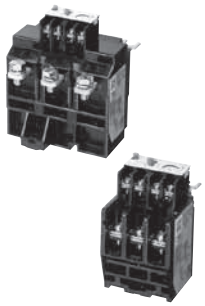 (No.AF00-140, 144)	01/88 ∫ 01/100	• New models added to the series: Standard (overload protection with 3 elements), 2E (overload + phase loss), long time operation (3 elements), Quick operation. • Independent SPST-NC/SPST-NO auxiliary contacts. • Switchable between manual and automatic resetting. • A wide range of options.	• Standard type • 2E type • Long time operating type • Quick operating type	**TR-□/3, TR-□H/3** **TK-□, TK-□H** **TR-□L/3, TR-□LH/3** **TR-□Q, TR-□QH**
SS Series	Solid-state Contactors	01/101 ∫ 01/115	• These Solid-state Contactors are non-contact semiconductor contactors that provide the characteristics of magnetic contactors. • Long life and quiet operation. • Cooling fan included in one-piece structure. • AC control is also possible. • Surge absorber included. • Lineup includes models with zero-cross switching function. • A wide range of rated voltages. • Operating indicator (LED) included as standard feature. • Built-in auxiliary output module.	Models	Type
				• Single-pole type (main circuit 240V AC)	**SS□1**
				• Single-pole type (main circuit 480V AC)	**SS□1H**
				• 3-pole type (main circuit 240V AC)	**SS□2, SS□3**
				• 3-pole type (main circuit 480V AC)	**SS□2H, SS□3H**

Downloaded from Arrow.com.

Frame size	0N	5-1N	N2	N3	N5	N6	N7	N8	N10	N12	N14
Ampere setting range [A]	0.1-13	0.1-18	4-42	7-105	18-105	45-160	45-160	65-185	85-240	110-450	240-600

Frame size	SS03	SS08	SS10	SS20	SS30	SS40	SS50	SS70	SS80	SS100	SS120	SS150	SS200
Rated themal current [A]	3	8	10	20	30	40	50	70	80	100	120	150	200

Downloaded from Arrow.com.

01 Magnetic Contactors and Starters
Solid-state Contactors

		Page
Magnetic Contactors and Starters	SC and SW series standard type	
	General information	01/1
	Versions	01/2
	Quick selection guide	
	Non reversing, Open type	01/4
	Enclosed type	01/9
	Reversing, Open type	01/12
	Enclosed type	01/15
	Type number nomenclature	01/17
	Ordering code system	01/18
	Specifications	01/20
	Standard type	01/25
	Reversing standard type	01/34
	DC operated	01/41
	OFF-delay release	01/46
	With extra pick-up operating coil	01/47
	Mechanical latch contactors	01/48
	Heavy starting duty starters	01/53
	With quick operating overload relay	01/55
	With phase loss protective device	01/56
	With phase loss and phase-sequence protective device	01/58
	Enclosed with pushbuttons	01/60
	Dust-tight/light-corrosion resistance	01/62
	For single-phase resistance load	01/63
	With single button auxiliary contact	01/64
	With quick connection terminals	01/65
	Optional unit	01/66
DC Magnetic Contactors	SB series	01/78
Magnetic Contactors and Starters	FC and FW series	
	FC series	01/81
	Ordering code system	01/82
	FW series	01/84
	FW series with pushbuttons	01/87
Thermal Overload Relays	TR series	
	General information	01/88
	Ordering code system	01/89
	Features and optional accessories	01/90
	Selection guide	
	Standard type	01/91
	Long time operating type	01/92
	Quick operating type	01/93
	TK series	
	With phase loss protective device	01/100
Solid-state Contactors	SS series	01/101
Magnetic Contactors and Starters	UL and CSA approved	01/116
	TÜV approved	01/123
	CCC approved	01/127
	SJ series	01/130

Downloaded from Arrow.com.

MINIMUM ORDERS

Orders amounting to **less than ¥10,000** net per order will be charged as ¥10,000 net per order plus freight and other charges.

WEIGHTS AND DIMENSIONS

Weights and dimensions appearing in this catalog are the best information available at the time of going to press. FUJI ELECTRIC FA has a policy of continuous product improvement, and design changes may make this information out of date.
Please confirm such details before planning actual construction.

INFORMATION IN THIS CATALOG IS SUBJECT TO CHANGE WITHOUT NOTICE.

Downloaded from Arrow.com.

FUJI low-voltage contactors and starters are available in a broad choice of types, from high-performance to economy, for all consumer and industrial needs. For standard applications, we offer the high-performance SC series. We offer the economical F series for light industrial use, the SB series dedicated to DC circuits, and the SS series with long service-life noise-free solid-state contactors.

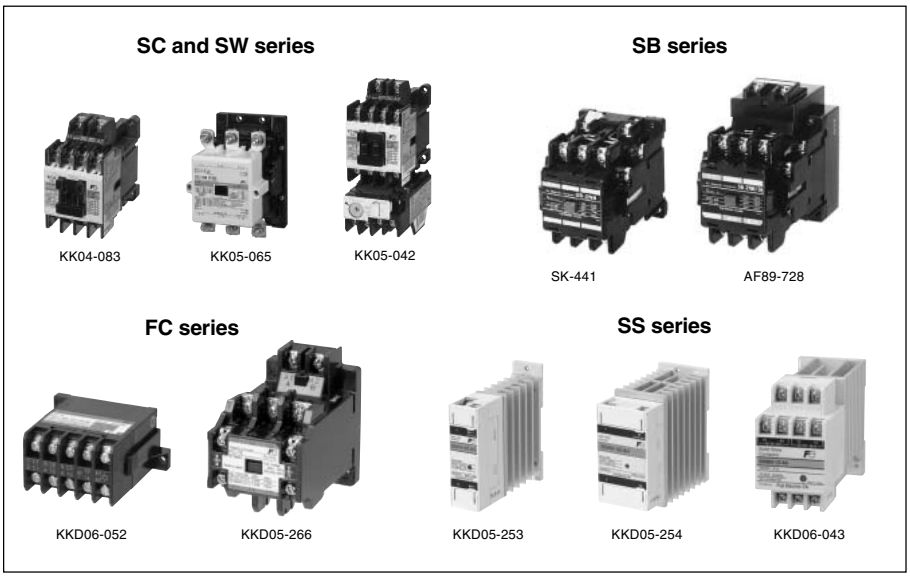

SC and SW series
Standard type magnetic contactors and starters
The SC series is a range of long service-life and high-performance contactors. SC-03 to SC-N3 small-frame contactors provide snap-on fitting of numerous optional units, such as auxiliary contact blocks, coil surge suppressors, and operation counters. Field modifications are quick and easy to make.
Type SC-N6 and above contactors come with an IC-controlled SUPER MAGNET coil, which operates from both AC and DC sources, to eliminate burnt coils and contact chattering caused by voltage fluctuation.

SB series
DC magnetic contactors
We developed the SB series DC contactors from our SC series AC contactors. Applications include opening and closing DC circuits and controlling DC motors. They permit switching of DC loads up to 550V DC, 360A. There are two main contact arrangements available: the 2NO type and the 2NO + 1NC type, which has one NC contact for dynamic brake circuits. Type SB-5N and above contactors come with an IC-controlled SUPER MAGNET coil for improved operational stability.

FC and FW series
Definite purpose contactors and starters
The FC series contactors are compact and economical contactors designed for use in consumer appliances with relatively low switching frequencies. Typical applications include air conditioners, industrial washing machines, heaters, compressors, driers, and fans. Contactor pickup voltage is 75% of the rated voltage. FC-0 is available with tab and printed board terminals, as well as with self-lifting screw terminals.

SS series
Solid-state contactors
The SS series contactors employ a semiconductor that can withstand both high voltage and large overcurrent when making and breaking load circuits. The completely contactless design gives high performance, including long service life and noise-free operation. Applications include frequent making and breaking for motors, heaters, and similar circuits.
A built-in surge absorbing varistor and CR circuit to protect the SSC from surges when switching inductive loads, and surges from external circuits.

DUO series
BM3 series manual motor starters, SC-M and SC-E series magnetic contactors
Refer to the Indiviclual Catalog No.02.

Downloaded from Arrow.com.

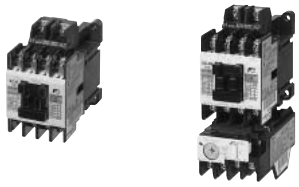

KK04-083 KK05-042

Standard type contactors and starters

Standard type is usually used to start and stop motors, and to open and close resistance loads like heaters or electric furnaces.
See page 01/25.

KK05-065

Contactors and starters with SUPER MAGNET

IC operated SUPER MAGNET prevents coil burning and contact welding due to voltage fluctuations
See page 01/25.

AF88-1347

Enclosed type starters

Standard type starter are housed in a protective enclosure.
See page 01/33.

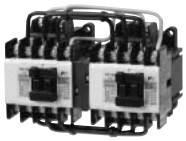

KKD06-064

Reversing contactors and starters

This type is most suitable for reversing operation of 3-phase motors or plugging or braking.
See page 01/34.

KKD06-026

DC-operated contactors and starters

Main circuit is AC, and operation is carried out by DC operating coil. This type is useful for applications in which control power source is independent.
See page 01/41.

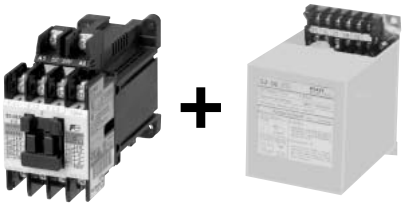

KKD05-270 H-AF89-76

OFF-delay release contactors and starters

This is a combination of DC-operated magnetic contactor and off-delay release unit. This prevents circuit opening due to instantaneous voltgage drops.
See page 01/46.

AF88-820

With extra pickup operating coil

These contactors are suitable for use in places with poor power supply conditions. These contactors operate normally even if the coil input voltage falls to 75% of the coil rated voltage.
See page 01/47.

AF88-1353

Mechanical latch contactors

Latch mechanism prevents the circuit from opening due to power failure, instantaneous power failure, or voltage drop of power source. This is suitable for change-over circuit and stand-by power supply equipment.
See page 01/48.

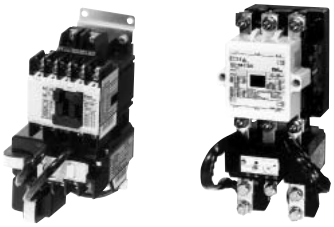

AF88-1408 AF00-299

Heavy starting duty starters

This is suitable for overload protection or stall prevention of motors with longer starting times such as those for blowers and fans having a large inertia.
See page 01/53.

Downloaded from Arrow.com.

KK05-042

Starters with quick-operating overload relay

With the attached quick operating type O/L relay, this is suitable for protecting submersible pumps or compressor motors with a small heat capacity.
See page 01/55.

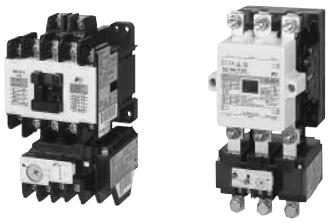

KK05-047 KK05-057

Starters with phase-loss protective device

The attached 2E thermal O/L relay protects against motor overload and as well as phase-loss.
See page 01/56.

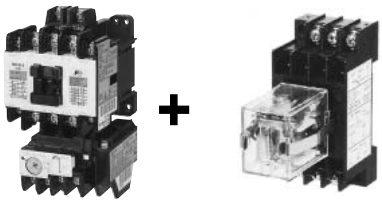

KK05-047 SP-1075

Starters with phase-loss and phase-sequence protective device

By combining 2E thermal O/L relay and phase-sequence relay, motor overload, phase-loss and phase-sequence protection is obtained.
See page 01/58.

KKD06-010

Starters with on-off and RESET pushbuttons

Pushbuttons for close and open are built in the enclosure. Suitable for simple operations.
See page 01/60.

SD-704

Dush-tight/light-corrosion resistant type starters

The enclosure is dust-tight and corrosion-proof, and so is suitable for locations with dusty or corrosive atmospheres.
See page 01/62.

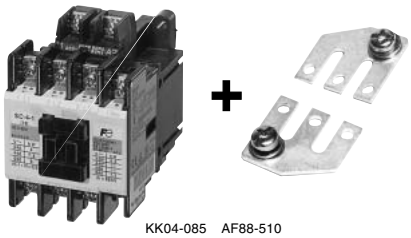

KK04-085 AF88-510

Contactors for single-phase resistance load

This is a standard type magnetic contactor with a 3-phase parallel plate terminal. This is most suitable for on-off operation of electric heaters, water heaters and electric lights.
See page 01/63.

KKD06-036

With single-button auxiliary contacts

An auxiliary contact of a standard contactor is bifurcated. All SC-03H to SC-N12H contactor, however, feature single-button auxiliary contacts with a higher current rating than the contacts used by the standard contactor.
See page 01/64.

AF95-240

With quick connection terminals

No removing terminal screw is required. When contactor and starters with the quick connection terminals are shipped, these screws are inserted in the terminals section but make no contact. It reduces the number of wiring steps. Terminals with finger protection enable a high level of safety.
See page 01/65.

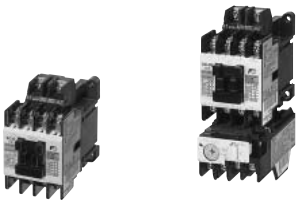

KK04-083 KK05-042

UL, CSA, TÜV and CCC approved motor starters and contactors

Many models of SC series conform to UL, CSA, TÜV and CCC requirements.
See page 01/120.

Downloaded from Arrow.com.

■ Types and ratings/Non-reversing, Open

Frame size		03	0	05	4-0	Further information
Max. motor capacity (kW) AC-3, IEC 60947-4-1	200–240V	2.5	3.5	3.5	4.5	
	380–440V	4	5.5	5.5	7.5	
	500–550V	4	5.5	5.5	7.5	
	600–660V	4	5.5	5.5	7.5	
Operational current (A)	200–240V	11	13	13	18	
	380–440V	9	12	12	16	
	500–550V	7	9	9	13	
	600–660V	5	7	7	9	
Operational current (A)	AC-1	20	20	20	25	
Conventional free air thermal current (A)		20	20	20	25	
Auxiliary contact arrangement		1NO 1NC	1NO 1NC	1NO+1NC 2NO, 2NC	1NO 1NC	
Standard	Contactor Starter	SC-03 SW-03/3H	SC-0 SW-0/3H	SC-05 SW-05/3H	SC-4-0 SW-4-0/3H	*Page 01/25*
DC operated	Contactor Starter	SC-03/G SW-03/G3H	SC-0/G SW-0/G3H	SC-05/G SW-05/G3H	SC-4-0/G SW-4-0/G3H	*Page 01/41*
OFF-delay release *1	Contactor Starter	SC-03/G+SZ-DE□ SW-03/G3H+ SZ-DE□	SC-0/G+SZ-DE□ SW-0/G3H+ SZ-DE□	SC-05/G+SZ-DE□ SW-05/G3H+ SZ-DE□	SC-4-0/G+SZ-DE□ SW-4-0/G3H+ SZ-DE□	*Page 01/46*
With extra pick-up operating coil	Contactor Starter	SC-03/U SW-03/U3H	SC-0/U SW-0/U3H	SC-05/U SW-05/U3H	SC-4-0/U SW-4-0/U3H	*Page 01/47*
Mechanical latch AC operated	Contactor Starter	SC-03/V –	SC-0/V –	SC-05/V –	SC-4-0/V –	*Page 01/48*
Mechanical latch DC operated	Contactor Starter	SC-03/VG –	SC-0/VG –	SC-05/VG –	SC-4-0/VG –	*Page 01/46*
Heavy starting duty	Contactor Starter	– SW-03/3L	– SW-0/3L	– SW-05/3L	– SW-4-0/3L	*Page 01/53*
With quick operating overload relay	Contactor Starter	– SW-03/3Q	– SW-0/3Q	– SW-05/3Q	– SW-4-0/3Q	*Page 01/55*
With phase-loss protective device	Contactor Starter	– SW-03/2E	– SW-0/2E	– SW-05/2E	– SW-4-0/2E	*Page 01/56*
With phase-loss and phase sequence protective device *2	Contactor Starter	– SW-03/2E+QE-□0N	– SW-0/2E+QE-□0N	– SW-05/2E+QE-□0N	– SW-4-0/2E+QE-□0N	*Page 01/58*
For single-phase resistance load	Contactor Starter	SC-03+SZ-SP1 –	SC-0+SZ-SP1 –	SC-05+SZ-SP1 –	SC-4-0+SZ-SP2 –	*Page 01/63*
With quick counection terminals	Contactor starter	SC-03Y SW-03Y	SC-0Y SW-0Y	SC-05Y SW-05Y	– –	Page 01/65
Thermal overload relay On-contactor mounting						*Page 01/88*
Standard		TR-0N/3	TR-0N/3	TR-0N/3	TR-5-1N/3	
Long time operation		TR-0NL/3	TR-0NL/3	TR-0NL/3	TR-5-1NL/3	
Quick operation		TR-0NQ	TR-0NQ	TR-0NQ	TR-5-1NQ	
Phase-loss protection		TK-0N	TK-0N	TK-0N	TK-5-1N	

Note: *1 Replace the □ mark in the type number by the operating voltage code.
100V AC: 100, 110V AC: 110, 200V AC: 200, 220V AC: 220
*2 Replace the □ mark in the type number by the operating voltage code.
200-220V AC: 2, 380-415V AC: 4

Downloaded from Arrow.com.

■ Types and ratings/Non-reversing, Open

Frame size		4-1	5-1	N1	N2	Further information
Max. motor capacity (kW) AC-3, IEC 60947-4-1	200–240V	5.5	5.5	7.5	11	
	380–440V	11	11	15	18.5	
	500–550V	11	11	15	18.5	
	600–660V	7.5	7.5	11	15	
Operational current (A)	200–240V	22	22	32	40	
	380–440V	22	22	32	40	
	500–550V	17	17	24	29	
	600–660V	9	9	15	19	
Operational current (A)	AC-1	32	32	50	60	
Conventional free air thermal current (A)		32	32	50	60	
Auxiliary contact arrangement		1NO 1NC	1NO+1NC, 2NO 2NO+2NC, 2NC	2NO+2NC 4NO+4NC	2NO+2NC 4NO+4NC	
Standard	Contactor Starter	SC-4-1 SW-4-1/3H	SC-5-1 SW-5-1/3H	SC-N1 SW-N1/3H	SC-N2 SW-N2/3H	*Page 01/25*
DC operated	Contactor Starter	SC-4-1/G SW-4-1/G3H	SC-5-1/G SW-5-1/G3H	SC-N1/G SW-N1/G3H	SC-N2/G SW-N2/G3H	*Page 01/41*
OFF-delay release *1	Contactor Starter	SC-4-1/G+SZ-DE□ SW-4-1/G3H+ SZ-DE□	SC-5-1/G+SZ-DE□ SW-5-1/G3H+ SZ-DE□	SC-N1/G+ SZ-N1/GDE SW-N1/G3H+ SZ-N1/GDE	SC-N2/G+ SZ-N1/GDE SW-N2/G3H+ SZ-N1/GDE	*Page 01/46*
With extra pick-up operating coil	Contactor Starter	SC-4-1/U SW-4-1/U3H	SC-5-1/U SW-5-1/U3H	SC-N1/U SW-N1/U3H	SC-N2/U SW-N2/U3H	*Page 01/47*
Mechanical latch AC operated	Contactor Starter	SC-4-1/V –	SC-5-1/V –	SC-N1/VS –	SC-N2/VS –	*Page 01/48*
Mechanical latch DC operated	Contactor Starter	SC-4-1/VG –	SC-5-1/VG –	SC-N1/VS –	SC-N2/VS –	*Page 01/48*
Heavy starting duty	Contactor Starter	– SW-4-1/3L	– SW-5-1/3L	– SW-N1/3L	– SW-N2/3L	*Page 01/53*
With quick operating overload relay	Contactor Starter	– SW-4-1/3Q	– SW-5-1/3Q	– SW-N1/3Q	– SW-N2/3Q	*Page 01/55*
With phase-loss protective device	Contactor Starter	– SW-4-1/2E	– SW-5-1/2E	– SW-N1/2E	– SW-N2/2E	*Page 01/56*
With phase-loss and phase sequence protective device *2	Contactor Starter	– SW-4-1/2E+QE-□0N	– SW-5-1/2E+QE-□0N	– SW-N1/2E+QE-□0N	– SW-N2/2E+QE-□0N	*Page 01/58*
For single-phase resistance load	Contactor Starter	SC-4-1+SZ-SP2 –	SC-5-1+SZ-SP2 –	SC-N1+SZ-SP3 –	SC-N2+SZ-SP3 –	*Page 01/63*
With quick counection terminals	Contactor starter	– –	SC-5-1Y SW-5-1Y	– –	– –	*Page 01/65*
Thermal overload relay On-contactor mounting						*Page 01/88*
Standard		TR-5-1N/3	TR-5-1N/3	TR-N2/3	TR-N2/3	
Long time operation		TR-5-1NL/3	TR-5-1NL/3	TR-N2L/3	TR-N2L/3	
Quick operation		TR-5-1NQ	TR-5-1NQ	TR-N2Q	TR-N2Q	
Phase-loss protection		TK-5-1N	TK-5-1N	TK-N2	TK-N2	

Note: *1 Replace the □ mark in the type number by the operating voltage code.
100V AC: 100, 110V AC: 110, 200V AC: 200, 220V AC: 220
*2 Replace the □ mark in the type number by the operating voltage code.
200-220V AC: 2, 380-415V AC: 4

Downloaded from Arrow.com.

■ Types and ratings/Non-reversing, Open

Frame size		N2S	N3	N4	N5A	Further information
Max. motor capacity (kW)	200–240V	15	18.5	22	30	
	380–440V	22	30	40	55	
AC-3, IEC 60947-4-1	500–550V	25	37	37	55	
	600–660V	22	30	37	55	
Operational current (A)	200–240V	50	65	80	105	
	380–440V	50	65	80	105	
	500–550V	38	60	60	85	
	600–660V	26	38	44	64	
Operational current (A)	AC-1	80	100	135	150	
Conventional free air thermal current (A)		80	100	135	150	
Auxiliary contact arrangement		2NO+2NC 4NO+4NC	2NO+2NC 4NO+4NC	2NO+2NC 4NO+4NC	2NO+2NC 4NO+4NC	
Standard	Contactor Starter	SC-N2S SW-N2S/3H	SC-N3 SW-N3/3H	SC-N4 SW-N4/3H	SC-N5A SW-N5A/3H	*Page 01/25*
DC operated	Contactor Starter	SC-N2S/G SW-N2S/G3H	SC-N3/G SW-N3/G3H	SC-N4/G SW-N4/G3H	SC-N5/G SW-N5/G3H	*Page 01/41*
OFF-delay release	Contactor Starter	SC-N2S/G+ SZ-N2S/GDE SW-N2S/G3H+ SZ-N2S/GDE	SC-N3/G+ SZ-N2S/GDE SW-N3/G3H+ SZ-N2S/GDE	SC-N4/SE+ SZ-N5/DE SW-N4/SE3H+ SZ-N5/SEDE	SC-N5+ SZ-N5/DE SW-N5/3H+ SZ-N5/DE	*Page 01/46*
With extra pick-up operating coil *1	Contactor Starter	SC-N2S/U SW-N2S/U3H	SC-N3/U SW-N3/U3H	SC-N4/U SW-N4/U3H	– –	*Page 01/47*
Mechanical latch AC operated	Contactor Starter	SC-N2S/VS –	SC-N3/VS –	SC-N4/VS –	SC-N5/VS –	*Page 01/48*
Mechanical latch DC operated	Contactor Starter	SC-N2S/VS –	SC-N3/VS –	SC-N4/VS –	SC-N5/VS –	*Page 01/48*
Heavy starting duty	Contactor Starter	– SW-N2S/3L	– SW-N3/3L	– SW-N4/3L	– SW-N5A/3L	*Page 01/53*
With quick operating overload relay	Contactor Starter	– SW-N2S/3Q	– SW-N3/3Q	– SW-N4/3Q	– SW-N5A/3Q	*Page 01/55*
With phase-loss protective device	Contactor Starter	– SW-N2S/2E	– SW-N3/2E	– SW-N4/2E	– SW-N5A/2E	*Page 01/56*
With phase-loss and phase sequence protective device *2	Contactor Starter	– SW-N2S/2E+QE-□0N	– SW-N3/2E+QE-□0N	– SW-N4/2E+QE-□0N	– SW-N5A/2E+QE-□0N	*Page 01/58*
For single-phase resistance load	Contactor Starter	SC-N2S+SZ-SP4 –	SC-N3+SZ-SP4 –	SC-N4+SZ-SP5 –	SC-N5A+SZ-SP5 –	*Page 01/63*
Thermal overload relay On-contactor mounting						*Page 01/88*
Standard		TR-N3/3	TR-N3/3	TR-N5/3	TR-N5/3	
Long time operation		TR-N3L/3	TR-N3L/3	TR-N5L/3	TR-N5L/3	
Quick operation		TR-N3Q	TR-N3Q	TR-N5Q	TR-N5Q	
Phase-loss protection		TK-N3	TK-N3	TK-N5	TK-N5	

Note: *1 The standard types for frame sizes N6 and above (with SUPER MAGNET) hold without chattering even if the line voltage drops to 65% of its rated value.
*2 Replace the □ mark in the type namber by the operating voltage code.
200-220V AC: 2, 380-415V AC: 4

Downloaded from Arrow.com.

■ Types and ratings/Non-reversing, Open

Frame size		N6	N7	N8	N10	Further information
Max. motor capacity (kW) AC-3, CEC 60947-4-1	200–240V	37	45	55	65	
	380–440V	60	75	90	110	
	500–550V	60	75	130	132	
	600–660V	60	90	132	132	
Operational current (A)	200–240V	125	150	180	220	
	380–440V	125	150	180	220	
	500–550V	90	120	180	200	
	600–660V	72	103	150	150	
Operational current (A)	AC-1	150	200	260	260	
Conventional free air thermal current (A)		150	200	260	260	
Auxiliary contact arrangement		2NO+2NC 4NO+4NC	2NO+2NC 4NO+4NC	2NO+2NC 4NO+4NC	2NO+2NC 4NO+4NC	
Standard	Contactor	SC-N6	SC-N7	SC-N8	SC-N10	*Page 01/25*
	Starter	SW-N6/3H	SW-N7/3H	SW-N8/3H	SW-N10/3H	
DC operated	Contactor	SC-N6	SC-N7	SC-N8	SC-N10	*Page 01/41*
	Starter	SW-N6/3H	SW-N7/3H	SW-N8/3H	SW-N10/3H	
OFF-delay release	Contactor	SC-N6+SZ-N6/DE	SC-N7+SZ-N6/DE	SC-N8+SZ-N8/DE	SC-N10+SZ-N8/DE	*Page 01/46*
	Starter	SW-N6/3H+ SZ-N6/DE	SW-N7/3H+ SZ-N6/DE	SW-N8/3H+ SZ-N8/DE	SW-N10/3H+ SZ-N8/DE	
With extra pick-up operating coil *1	Contactor	–	–	–	–	–
	Starter	–	–	–	–	–
Mechanical latch/ AC operated	Contactor	SC-N6/VS	SC-N7/VS	SC-N8/VS	SC-N10/VS	*Page 01/48*
	Starter	–	–	–	–	
Mechanical latch/ DC operated	Contactor	SC-N6/VS	SC-N7/VS	SC-N8/VS	SC-N10/VS	*Page 01/48*
	Starter	–	–	–	–	
Heavy starting duty	Contactor	–	–	–	–	*Page 01/53*
	Starter	SW-N6/3L	SW-N7/3L	SW-N8/3L	SW-N10/3L	
With quick operating overload relay	Contactor	–	–	–	–	*Page 01/55*
	Starter	–	–	–	–	
With phase-loss protective device	Contactor	–	–	–	–	*Page 01/56*
	Starter	SW-N6/2E	SW-N7/2E	SW-N8/2E	SW-N10/2E	
With phase-loss and phase sequence protective device *2	Contactor	–	–	–	–	*Page 01/58*
	Starter	SW-N6/2E+QE-□0N	SW-N7/2E+QE-□0N	SW-N8/2E+QE-□0N	SW-N10/2E+QE-□0N	
For single-phase resistance load	Contactor	SC-N6+SZ-SP7	SC-N7+SZ-SP7	SC-N8+SZ-SP8	SC-N10+SZ-SP8	*Page 01/63*
	Starter	–	–	–	–	
Thermal overload relay On-contactor mounting						*Page 01/88*
Standard		TR-N6/3	TR-N7/3	TR-N8/3	TR-N10/3	
Long time operation		TR-N6L/3	TR-N7L/3	TR-N10L/3	TR-N10L/3	
Quick operation		–	–	–	–	
Phase-loss protection		TK-N6	TK-N7	TK-N8	TK-N10	

Note: *1 The standard types for frame sizes N6 and above (with SUPER MAGNET) hold without chattering even if the line voltage drops to 65% of its rated value.
*2 Replace the □ mark in the type namber by the operating voltage code.
200-220V AC: 2, 380-415V AC: 4

Downloaded from Arrow.com.

■ Types and ratings/Non-reversing, Open

Frame size		N11	N12	N14	N16	Further information
Max. motor capacity (kW) AC-3, IEC 60947-4-1	200–240V	90	120	180	220	
	380–440V	160	220	315	440	
	500–550V	160	250	400	500	
	600–660V	200	300	480	500	
Operational current (A)	200–240V	300	400	600	800	
	380–440V	300	400	600	800	
	500–550V	230	360	600	720	
	600–660V	230	360	600	630	
Operational current (A)	AC-1	350	450	660	800	
Conventional free air thermal current (A)		350	450	660	800	
Auxiliary contact arrangement		2NO+2NC 4NO+4NC	2NO+2NC 4NO+4NC	2NO+2NC 4NO+4NC	2NO+2NC 4NO+4NC	
Standard	Contactor	SC-N11	SC-N12	SC-N14	SC-N16	*Page 01/25*
	Starter	SW-N11/3H	SW-N12/3H	SW-N14/3H	–	
DC operated	Contactor	SC-N11	SC-N12	SC-N14	SC-N16	*Page 01/41*
	Starter	SW-N11/3H	SW-N12/3H	SW-N14/3H	–	
OFF-delay release	Contactor	SC-N11+SZ-N11/DE	SC-N12+SZ-N11/DE	SC-N14+SZ-N14/DE	–	*Page 01/46*
	Starter	SW-N11/3H+ SZ-N11/DE	SW-N12/3H+ SZ-N11/DE	SW-N14/3H+ SZ-N14/DE	– –	
With extra pick-up operating coil *1	Contactor	–	–	–	–	–
	Starter	–	–	–	–	–
Mechanical latch AC operated	Contactor	SC-N11/VS	SC-N12/VS	SC-N14/VS	–	*Page 01/48*
	Starter	–	–	–	–	
Mechanical latch DC operated	Contactor	SC-N11/VS	SC-N12/VS	SC-N14/VS	–	*Page 01/48*
	Starter	–	–	–	–	
Heavy starting duty	Contactor	–	–	–	–	*Page 01/53*
	Starter	SW-N11/3L	SW-N12/3L	SW-N14/3L	–	
With quick operating overload relay	Contactor	–	–	–	–	–
	Starter	–	–	–	–	–
With phase-loss protective device	Contactor	–	–	–	–	*Page 01/56*
	Starter	SW-N11/2E	SW-N12/2E	SW-N14/2E	–	
With phase-loss and phase sequence protective device *2	Contactor	–	–	–	–	*Page 01/58*
	Starter	SW-N11/2E+QE-□0N	SW-N12/2E+QE-□0N	SW-N14/2E+QE-□0N	–	
For single-phase resistance load	Contactor	SC-N11+SZ-SP9	SC-N12+SZ-SP9	SC-N14+SZ-SP10	SC-N16+SZ-SP10	*Page 01/63*
	Starter	–	–	–	–	
Thermal overload relay On-contactor mounting						*Page 01/88*
Standard		TR-N12/3	TR-N12/3	TR-N14/3	–	
Long time operation		TR-N12L/3	TR-N12L/3	TR-N14L/3	–	
Quick operation		–	–	–	–	
Phase-loss protection		TK-N12	TK-N12	TK-N14	–	

Note: *1 The standard types for frame sizes N6 and above (with SUPER MAGNET) hold without chattering even if the line voltage drops to 65% of its rated value.
*2 Replace the □ mark in the type namber by the operating voltage code.
200-220V AC: 2, 380-415V AC: 4

Downloaded from Arrow.com.

■ Types and ratings/Non-reversing, Enclosed

Frame size		03	0	05	4-0	Further information
Max. motor capacity (kW) AC-3, IEC 60947-4-1	200–240V	2.5	3.5	3.5	4.5	
	380–440V	4	5.5	5.5	7.5	
	500–550V	4	5.5	5.5	7.5	
	600–660V	4	5.5	5.5	7.5	
Operational current (A)	200–240V	11	13	13	18	
	380–440V	9	12	12	16	
	500–550V	7	9	9	13	
	600–660V	5	7	7	9	
Operational current (A)	AC-1	20	20	20	25	
Conventional free air thermal current (A)		20	20	20	25	
Auxiliary contact arrangement		1NO 1NC	1NO 1NC	1NO+1NC 2NO, 2NC	1NO 1NC	
Standard	Contactor	SC-03C	SC-0C	SC-05C	SC-4-0C	*Page 01/25*
	Starter	SW-03C/3H	SW-0C/3H	SW-05C/3H	SW-4-0C/3H	
With extra pick-up operating coil	Contactor	–	–	–	–	*Page 01/47*
	Starter	SW-03C/U3H	SW-0C/U3H	SW-05C/U3H	SW-4-0C/U3H	
With phase-loss protective device	Contactor	–	–	–	–	*Page 01/56*
	Starter	SW-03C/2E	SW-0C/2E	SW-05C/2E	SW-4-0C/2E	
With ON-OFF/reset pushbuttons	Contactor	–	–	–	–	*Page 01/60*
	Starter	SW-03P/3H	SW-0P/3H	SW-05P/3H	SW-4-0P/3H	
Dust tight/light corrosion resistant	Contactor	–	–	–	–	*Page 01/62*
	Starter	SW-03LG/3H	SW-0LG/3H	SW-05LG/3H	SW-4-0LG/3H	
Thermal overload relay		*See page 01/12.* Same as the open types				*Page 01/88*

Frame size		4-1	5-1	N1	N2	Further information
Max. motor capacity (kW) AC-3, IEC 60947-4-1	200–240V	5.5	5.5	7.5	11	
	380–440V	11	11	15	18.5	
	500–550V	11	11	15	18.5	
	600–660V	7.5	7.5	11	15	
Operational current (A)	200–240V	22	22	32	40	
	380–440V	22	22	32	40	
	500–550V	17	17	24	29	
	600–660V	9	9	15	19	
Operational current (A)	AC-1	32	32	50	60	
Conventional free air thermal current (A)		32	32	50	60	
Auxiliary contact arrangement		1NO 1NC	1NO+1NC 2NO, 2NC	2NO+2NC 4NO+4NC	2NO+2NC 4NO+4NC	
Standard	Contactor	SC-4-1C	SC-5-1C	SC-N1C	SC-N2C	*Page 01/25*
	Starter	SW-4-1C/3H	SW-5-1C/3H	SW-N1C/3H	SW-N2C/3H	
With extra pick-up operating coil	Contactor	–	–	–	–	*Page 01/47*
	Starter	SW-4-1C/U3H	SW-5-1C/U3H	SW-N1C/U3H	SW-N2C/U3H	
With phase-loss protective device	Contactor	–	–	–	–	*Page 01/56*
	Starter	SW-4-1C/2E	SW-5-1C/2E	SW-N1C/2E	SW-N2C/2E	
With ON-OFF pushbuttons	Contactor	–	–	–	–	*Page 01/60*
	Starter	–	–	SW-N1P/3H	SW-N2P/3H	
With ON-OFF/reset pushbuttons	Contactor	–	–	–	–	*Page 01/60*
	Starter	SW-4-1P/3H	SW-5-1P/3H	SW-N1PB/3H	SW-N2PB/3H	
Dust tight/light corrosion resistant	Contactor	–	–	–	–	*Page 01/62*
	Starter	SW-4-1LG/3H	SW-5-1LG/3H	SW-N1LG/3H	SW-N2LG/3H	
Thermal overload relay		*See page 01/12.* Same as the open types				*Page 01/88*

Downloaded from Arrow.com.

■ Types and ratings/Non-reversing, Enclosed

Frame size		N2S	N3	N4	N5A	Further information
Max. motor capacity (kW)	200–240V	15	18.5	22	30	
	380–440V	22	30	40	55	
AC-3, IEC 60947-4-1	500–550V	25	37	37	55	
	600–660V	22	30	37	55	
Operational current (A)	200–240V	50	65	80	105	
	380–440V	50	65	80	105	
	500–550V	38	60	60	85	
	600–660V	26	38	44	64	
Operational current (A)	AC-1	80	100	135	150	
Conventional free air thermal current (A)		80	100	135	150	
Auxiliary contact arrangement		2NO+2NC 4NO+4NC	2NO+2NC 4NO+4NC	2NO+2NC 4NO+4NC	2NO+2NC 4NO+4NC	
Standard	Contactor	SC-N2SC	SC-N3C	SC-N4C	SC-N5AC	*Page*
	Starter	SW-N2SC/3H	SW-N3C/3H	SW-N4C/3H	SW-N5AC/3H	*01/25*
With extra pick-up operating coil *	Contactor	–	–	–	–	*Page*
	Starter	SW-N2SC/U3H	SW-N3C/U3H	SW-N4C/SE3H	–	*01/47*
With phase-loss protective device	Contactor	–	–	–	–	*Page*
	Starter	SW-N2SC/2E	SW-N3C/2E	SW-N4C/2E	SW-N5AC/2E	*01/56*
With ON-OFF pushbuttons	Contactor	–	–	–	–	*Page*
	Starter	SW-N2SP/3H	SW-N3P/3H	–	–	*01/60*
With ON-OFF and reset pushbuttons	Contactor	–	–	–	–	*Page*
	Starter	SW-N2SPB/3H	SW-N3PB/3H	SW-N4PB/3H	SW-N5PB/3H	*01/60*
Dust tight/light corrosion resistant	Contactor	–	–	–	–	*Page*
	Starter	SW-N2SLG/3H	SW-N3LG/3H	SW-N4LG/3H	SW-N5ALG/3H	*01/62*
Thermal overload relay		*See page 01/13.* Same as the open types				*Page 01/88*

Frame size		N6	N7	N8	N10	Further information
Max. motor capacity (kW)	200–240V	37	45	55	65	
	380–440V	60	75	90	110	
AC-3, IEC 60947-4-1	500–550V	60	75	130	132	
	600–660V	60	90	132	132	
Operational current (A)	200–240V	125	150	180	220	
	380–440V	125	150	180	220	
	500–550V	90	120	180	200	
	600–660V	72	103	150	150	
Operational current (A)	AC-1	150	200	260	260	
Conventional free air thermal current (A)		150	200	260	260	
Auxiliary contact arrangement		2NO+2NC 4NO+4NC	2NO+2NC 4NO+4NC	2NO+2NC 4NO+4NC	2NO+2NC 4NO+4NC	
Standard	Contactor	SC-N6C	SC-N7C	SC-N8C	SC-N10C	*Page*
	Starter	SW-N6C/3H	SW-N7C/3H	SW-N8C/3H	SW-N10C/3H	*01/25*
With extra pick-up operating coil *	Contactor	–	–	–	–	–
	Starter	–	–	–	–	–
With phase-loss protective device	Contactor	–	–	–	–	*Page*
	Starter	SW-N6C/2E	SW-N7C/2E	SW-N8C/2E	SW-N10C/2E	*01/56*
With ON-OFF pushbuttons	Contactor	–	–	–	–	–
	Starter	–	–	–	–	–
With ON-OFF and reset pushbuttons	Contactor	–	–	–	–	*Page*
	Starter	SW-N6PB/3H	–	SW-N8PB/3H	SW-N10PB/3H	*01/60*
Dust tight/light corrosion resistant	Contactor	–	–	–	–	*Page*
	Starter	SW-N6LG/3H	SW-N7LG/3H	SW-N8LG/3H	SW-N10LG/3H	*01/62*
Thermal overload relay		*See page 01/13.* Same as the open types				*Page 01/88*

Note: * The standard types for frame sizes N6 and above (with SUPER MAGNET) hold without chattering even if the line voltage drops to 65% of its rated value.

Downloaded from Arrow.com.

■ Types and ratings/Non-reversing, Enclosed

Frame size		N11	N12	N14	N16	Further information
Max. motor capacity (kW) AC-3, IEC 60947-4-1	200–240V	90	120	180	–	
	380–440V	160	220	315	–	
	500–550V	160	250	400	–	
	600–660V	200	300	480	–	
Operational current (A)	200–240V	300	400	600	–	
	380–440V	300	400	600	–	
	500–550V	230	360	600	–	
	600–660V	230	360	600	–	
Operational current (A)	AC-1	350	450	660	–	
Conventional free air thermal current (A)		350	450	660	–	
Auxiliary contact arrangement		2NO+2NC 4NO+4NC	2NO+2NC 4NO+4NC	2NO+2NC 4NO+4NC	– –	
Standard	Contactor	SC-N11C	SC-N12C	SC-N14C	–	*Page 01/25*
	Starter	SW-N11C/3H	SW-N12C/3H	SW-N14C/3H	–	
With extra pick-up operating coil *	Contactor	–	–	–	–	–
	Starter	–	–	–	–	–
With phase-loss protective device	Contactor	–	–	–	–	*Page 01/56*
	Starter	SW-N11C/2E	SW-N12C/2E	SW-N14C/2E	–	
With ON-OFF pushbuttons	Contactor	–	–	–	–	–
	Starter	–	–	–	–	–
With ON-OFF and reset pushbuttons	Contactor	–	–	–	–	–
	Starter	–	–	–	–	–
Dust tight/light corrosion resistant	Contactor	–	–	–	–	–
	Starter	–	–	–	–	–
Thermal overload relay		*See page 01/14.* Same as the open types				*Page 01/88*

Note: * The standard types for frame sizes N6 and above (with SUPER MAGNET) hold without chattering even if the line voltage drops to 65% of its rated value.

Downloaded from Arrow.com.

■ Types and ratings/Reversing, Open

Frame size		03	0	05	4-0	Further information
Max. motor capacity (kW) AC-3, IEC 60947-4-1	200–240V	2.5	3.5	3.5	4.5	
	380–440V	4	5.5	5.5	7.5	
	500–550V	4	5.5	5.5	7.5	
	600–660V	4	5.5	5.5	7.5	
Operational current (A)	200–240V	11	13	13	18	
	380–440V	9	12	12	16	
	500–550V	7	9	9	13	
	600–660V	5	7	7	9	
Conventional free air thermal current (A)		20	20	20	25	
Auxiliary contact arrangement		1NC×2 1NO×2	1NC×2 1NO×2	(1NO+1NC)×2 2NC×2	1NC×2 1NO×2	
Standard	Contactor	SC-03RM	SC-0RM	SC-05RM	SC-4-0RM	*Page*
	Starter	SW-03RM/3H	SW-0RM/3H	SW-05RM/3H	SW-4-0RM/3H	*01/34*
DC operated	Contactor	SC-03RM/G	SC-0RM/G	SC-05RM/G	SC-4-0RM/G	*Contact*
	Starter	SW-03RM/G3H	SW-0RM/G3H	SW-05RM/G3H	SW-4-0RM/G3H	*FUJI*
Mechanical latch AC operated	Contactor	SC-03RM/V	SC-0RM/V	SC-05RM/V	SC-4-0RM/V	*Page*
	Starter	–	–	–	–	*01/48*
Mechanical latch DC operated	Contactor	SC-03RM/VG	SC-0RM/VG	SC-05RM/VG	SC-4-0RM/VG	*Page*
	Starter	–	–	–	–	*01/48*
With phase-loss protective device	Contactor	–	–	–	–	*Page*
	Starter	SW-03RM/2E	SW-0RM/2E	SW-05RM/2E	SW-4-0RM/2E	*01/56*
Thermal overload relay On-contactor mounting						*Page* *01/88*
Standard		TR-0N/3	TR-0N/3	TR-0N/3	TR-5-1N/3	
Phase-loss protection		TK-0N	TK-0N	TK-0N	TK-5-1N	

Frame size		4-1	5-1	N1	N2	Further information
Max. motor capacity (kW) AC-3, IEC 60947-4-1	200–240V	5.5	5.5	7.5	11	
	380–440V	11	11	15	18.5	
	500–550V	11	11	15	18.5	
	600–660V	7.5	7.5	11	15	
Operational current (A)	200–240V	22	22	32	40	
	380–440V	22	22	32	40	
	500–550V	17	17	24	29	
	600–660V	9	9	15	19	
Conventional free air thermal current (A)		32	32	50	60	
Auxiliary contact arrangement		1NC×2 1NO×2	(1NO+1NC)×2,2NC×2 (2NO+2NC)×2	(2NO+2NC)×2 (3NO+3NC)×2	(2NO+2NC)×2 (3NO+3NC)×2	
Standard	Contactor	SC-4-1RM	SC-5-1RM	SC-N1RM	SC-N2RM	*Page*
	Starter	SW-4-1RM/3H	SW-5-1RM/3H	SW-N1RM/3H	SW-N2RM/3H	*01/34*
DC operated	Contactor	SC-4-1RM/G	SC-5-1RM/G	SC-N1RM/G	SC-N2RM/G	*Contact*
	Starter	SW-4-1RM/G3H	SW-5-1RM/G3H	SW-N1RM/G3H	SW-N2RM/G3H	*FUJI*
Mechanical latch AC operated	Contactor	SC-4-1RM/V	SC-5-1RM/V	SC-N1RM/VS	SC-N2RM/VS	*Page*
	Starter	–	–	–	–	*01/48*
Mechanical latch DC operated	Contactor	SC-4-1RM/VG	SC-5-1RM/VG	SC-N1RM/VS	SC-N2RM/VS	*Page*
	Starter	–	–	–	–	*01/48*
With phase-loss protective device	Contactor	–	–	–	–	*Page*
	Starter	SW-4-1RM/2E	SW-5-1RM/2E	SW-N1RM/2E	SW-N2RM/2E	*01/56*
Thermal overload relay On-contactor mounting						*Page* *01/88*
Standard		TR-5-1N/3	TR-5-1N/3	TR-N2/3	TR-N2/3	
Phase-loss protection		TK-5-1N	TK-5-1N	TK-N2	TK-N2	

Note: Auxiliary contact arrangements indicate the ones for types except mechanical latch types.

Downloaded from Arrow.com.

■ Types and ratings/Reversing, Open

Frame size		N2S	N3	N4	N5A	Further information
Max. motor capacity (kW) AC-3, IEC 60947-4-1	200–240V	15	18.5	22	30	
	380–440V	22	30	40	55	
	500–550V	25	37	37	55	
	600–660V	22	30	37	55	
Operational current (A)	200–240V	50	65	80	105	
	380–440V	50	65	80	105	
	500–550V	38	60	60	85	
	600–660V	26	38	44	64	
Conventional free air thermal current (A)		80	100	135	150	
Auxiliary contact arrangement		(2NO+2NC)×2 (3NO+3NC)×2	(2NO+2NC)×2 (3NO+3NC)×2	(2NO+2NC)×2 (3NO+3NC)×2	(2NO+2NC)×2 (3NO+3NC)×2	
Standard	Contactor	SC-N2SRM	SC-N3RM	SC-N4RM	SC-N5ARM	*Page 01/34*
	Starter	SW-N2SRM/3H	SW-N3RM/3H	SW-N4RM/3H	SW-N5ARM/3H	
DC operated	Contactor	SC-N2SRM/G	SC-N3RM/G	SC-N4RM/G	SC-N5RM/G	*Contact FUJI*
	Starter	SW-N2SRM/G3H	SW-N3RM/G3H	SW-N4RM/G3H	SW-N5RM/G3H	
Mechanical latch AC operated	Contactor	SC-N2SRM/VS	SC-N3RM/VS	SC-N4RM/VS	SC-N5RM/VS	*Page 01/48*
	Starter	–	–	–	–	
Mechanical latch DC operated	Contactor	SC-N2SRM/VS	SC-N3RM/VS	SC-N4RM/VS	SC-N5RM/VS	*Page 01/48*
	Starter	–	–	–	–	
With phase-loss protective device	Contactor	–	–	–	–	*Page 01/56*
	Starter	SW-N2SRM/2E	SW-N3RM/2E	SW-N4RM/2E	SW-N5ARM/2E	
Thermal overload relay On-contactor mounting						*Page 01/88*
Standard		TR-N3/3	TR-N3/3	TR-N5/3	TR-N5/3	
Phase-loss protection		TK-N3	TK-N3	TK-N5	TK-N5	

Frame size		N6	N7	N8	N10	Further information
Max. motor capacity (kW) AC-3, IEC 60947-4-1	200–240V	37	45	55	65	
	380–440V	60	75	90	110	
	500–550V	60	75	130	132	
	600–660V	60	90	132	132	
Operational current (A)	200–240V	125	150	180	220	
	380–440V	125	150	180	220	
	500–550V	90	120	180	200	
	600–660V	72	103	150	150	
Conventional free air thermal current (A)		150	200	260	260	
Auxiliary contact arrangement		(2NO+2NC)×2 (3NO+3NC)×2	(2NO+2NC)×2 (3NO+3NC)×2	(2NO+2NC)×2 (3NO+3NC)×2	(2NO+2NC)×2 (3NO+3NC)×2	
Standard	Contactor	SC-N6RM	SC-N7RM	SC-N8RM	SC-N10RM	*Page 01/34*
	Starter	SW-N6RM/3H	SW-N7RM/3H	SW-N8RM/3H	SW-N10RM/3H	
DC operated	Contactor	SC-N6RM	SC-N7RM	SC-N8RM	SC-N10RM	*Contact FUJI*
	Starter	SW-N6RM/3H	SW-N7RM/3H	SW-N8RM/3H	SW-N10RM/3H	
Mechanical latch AC operated	Contactor	SC-N6RM/VS	SC-N7RM/VS	SC-N8RM/VS	SC-N10RM/VS	*Page 01/48*
	Starter	–	–	–	–	
Mechanical latch DC operated	Contactor	SC-N6RM/VS	SC-N7RM/VS	SC-N8RM/VS	SC-N10RM/VS	*Page 01/48*
	Starter	–	–	–	–	
With phase-loss protective device	Contactor	–	–	–	–	*Page 01/56*
	Starter	SW-N6RM/2E	SW-N7RM/2E	SW-N8RM/2E	SW-N10RM/2E	
Thermal overload relay On-contactor mounting						*Page 01/88*
Standard		TR-N6/3	TR-N7/3	TR-N8/3	TR-N10/3	
Phase-loss protection		TK-N6	TK-N7	TK-N8	TK-N10	

Note: Auxiliary contact arrangements indicate the ones for types except mechanical latch types.

Downloaded from Arrow.com.

■ Types and ratings/Reversing, Open

Frame size		N11	N12	N14	N16	Further information
Max. motor capacity (kW)	200–240V	90	120	180	–	
	380–440V	160	220	315	–	
AC-3, IEC 60947-4-1	500–550V	160	250	400	–	
	600–660V	200	300	480	–	
Operational current (A)	200–240V	300	400	600	–	
	380–440V	300	400	600	–	
	500–550V	230	360	600	–	
	600–660V	230	360	600	–	
Conventional free air thermal current (A)		350	450	660	–	
Auxiliary contact arrangement		(2NO+2NC)×2 (3NO+3NC)×2	(2NO+2NC)×2 (3NO+3NC)×2	(2NO+2NC)×2 (3NO+3NC)×2	– –	
Standard	Contactor	SC-N11RM	SC-N12RM	SC-N14RM	–	*Page*
	Starter	SW-N11RM/3H	SW-N12RM/3H	SW-N14RM/3H	–	*01/34*
DC operated	Contactor	SC-N11RM	SC-N12RM	SC-N14RM	–	*Contact*
	Starter	SW-N11RM/3H	SW-N12RM/3H	SW-N14RM/3H	–	*FUJI*
Mechanical latch	Contactor	SC-N11RM/VS	SC-N12RM/VS	SC-N14RM/VS	–	*Page*
AC operated	Starter	–	–	–	–	*01/48*
Mechanical latch	Contactor	SC-N11RM/VS	SC-N12RM/VS	SC-N14RM/VS	–	*Page*
DC operated	Starter	–	–	–	–	*01/48*
With phase-loss	Contactor	–	–	–	–	*Page*
protective device	Starter	SW-N11RM/2E	SW-N12RM/2E	SW-N14RM/2E	–	*01/56*
Thermal overload relay On-contactor mounting						*Page* *01/88*
Standard		TR-N11/3	TR-N12/3	TR-N14/3	–	
Phase-loss protection		TK-N11	TK-N12	TK-N14	–	

Note: Auxiliary contact arrangements indicate the ones for types except mechanical latch types.

Downloaded from Arrow.com.

■ Types and ratings/Reversing, Enclosed

Frame size		03	0	05	4-0	Further information
Max. motor capacity (kW) AC-3, IEC 60947-4-1	200–240V	2.5	3.5	3.5	4.5	
	380–440V	4	5.5	5.5	7.5	
	500–550V	4	5.5	5.5	7.5	
	600–660V	4	5.5	5.5	7.5	
Operational current (A)	200–240V	11	13	13	18	
	380–440V	9	12	12	16	
	500–550V	7	9	9	13	
	600–660V	5	7	7	9	
Conventional free air thermal current (A)		20	20	20	25	
Auxiliary contact arrangement		1NC×2 1NO×2	1NC×2 1NO×2	(1NO+1NC)×2 2NC×2	1NC×2 1NO×2	
Standard	Contactor	SC-03RMC	SC-0RMC	SC-05RMC	SC-4-0RMC	*Page 01/34*
	Starter	SW-03RMC/3H	SW-0RMC/3H	SW-05RMC/3H	SW-4-0RMC/3H	
With phase-loss protective device	Contactor	–	–	–	–	*Page 01/56*
	Starter	SW-03RMC/2E	SW-0RMC/2E	SW-05RMC/2E	SW-4-0RMC/2E	
With ON-OFF pushbuttons	Contactor	–	–	–	–	–
	Starter	–	–	–	–	–
Thermal overload relay On-contactor mounting						*Page 01/88*
Standard		TR-0N/3	TR-0N/3	TR-0N/3	TR-5-1N/3	
Phase-loss protection		TK-0N	TK-0N	TK-0N	TK-5-1N	

Frame size		4-1	5-1	N1	N2	Further information
Max. motor capacity (kW) AC-3, IEC 60947-4-1	200–240V	5.5	5.5	7.5	11	
	380–440V	11	11	15	18.5	
	500–550V	11	11	15	18.5	
	600–660V	7.5	7.5	11	15	
Operational current (A)	200–240V	22	22	32	40	
	380–440V	22	22	32	40	
	500–550V	17	17	24	29	
	600–660V	9	9	15	19	
Conventional free air thermal current (A)		32	32	50	60	
Auxiliary contact arrangement		1NC×2 1NO×2	(1NO+1NC)×2 2NC×2	(2NO+2NC)×2 (3NO+3NC)×2	(2NO+2NC)×2 (3NO+3NC)×2	
Standard	Contactor	SC-4-1RMC	SC-5-1RMC	SC-N1RMC	SC-N2RMC	*Page 01/34*
	Starter	SW-4-1RMC/3H	SW-5-1RMC/3H	SW-N1RMC/3H	SW-N2RMC/3H	
With phase-loss protective device	Contactor	–	–	–	–	*Page 01/56*
	Starter	SW-4-1RMC/2E	SW-5-1RMC/2E	SW-N1RMC/2E	SW-N2RMC/2E	
With ON-OFF pushbuttons	Contactor	–	–	–	–	–
	Starter	–	–	–	–	–
Thermal overload relay On-contactor mounting						*Page 01/88*
Standard		TR-5-1N/3	TR-5-1N/3	TR-N2/3	TR-N2/3	
Phase-loss protection		TK-5-1N	TK-5-1N	TK-N2	TK-N2	

Downloaded from Arrow.com.

■ Types and ratings/Reversing, Enclosed

Frame size		N2S	N3	N4	N5A	Further information
Max. motor capacity (kW)	200–240V	15	18.5	22	30	
	380–440V	22	30	40	55	
AC-3, IEC 60947-4-1	500–550V	25	37	37	55	
	600–660V	22	30	37	55	
Operational current (A)	200–240V	50	65	80	105	
	380–440V	50	65	80	105	
	500–550V	38	60	60	85	
	600–660V	26	38	44	64	
Conventional free air thermal current (A)		80	100	135	150	
Auxiliary contact arrangement		(2NO+2NC)×2 (3NO+3NC)×2	(2NO+2NC)×2 (3NO+3NC)×2	(2NO+2NC)×2 (3NO+3NC)×2	(2NO+2NC)×2 (3NO+3NC)×2	
Standard	Contactor	SC-N2SRMC	SC-N3RMC	SC-N4RMC	SC-N5ARMC	*Page*
	Starter	SW-N2SRMC/3H	SW-N3RMC/3H	SW-N4RMC/3H	SW-N5ARMC/3H	*01/34*
With phase-loss protective device	Contactor	–	–	–	–	*Page*
	Starter	SW-N2SRMC/2E	SW-N3RMC/2E	SW-N4RMC/2E	SW-N5ARMC/2E	*01/56*
With ON-OFF pushbuttons	Contactor	–	–	–	–	–
	Starter	–	–	–	–	–
Thermal overload relay On-contactor mounting						*Page* *01/88*
Standard		TR-N3/3	TR-N3/3	TR-N5/3	TR-N5/3	
Phase-loss protection		TK-N3	TK-N3	TK-N5	TK-N5	

Frame size		N6	N7	N8	N10	Further information
Max. motor capacity (kW)	200–240V	37	45	55	65	
	380–440V	60	75	90	110	
AC-3, IEC 60947-4-1	500–550V	60	75	130	132	
	600–660V	60	90	132	132	
Operational current (A)	200–240V	125	150	180	220	
	380–440V	125	150	180	220	
	500–550V	90	120	180	200	
	600–660V	72	103	150	150	
Conventional free air thermal current (A)		150	200	260	260	
Auxiliary contact arrangement		(2NO+2NC)×2 (3NO+3NC)×2	(2NO+2NC)×2 (3NO+3NC)×2	(2NO+2NC)×2 (3NO+3NC)×2	(2NO+2NC)×2 (3NO+3NC)×2	
Standard	Contactor	SC-N6RMC	SC-N7RMC	SC-N8RMC	SC-N10RMC	*Page*
	Starter	SW-N6RMC/3H	SW-N7RMC/3H	SW-N8RMC/3H	SW-N10RMC/3H	*01/34*
With phase-loss protective device	Contactor	–	–	–	–	*Page*
	Starter	SW-N6RMC/2E	SW-N7RMC/2E	SW-N8RMC/2E	SW-N10RMC/2E	*01/56*
With ON-OFF pushbuttons	Contactor	–	–	–	–	–
	Starter	–	–	–	–	–
Thermal overload relay On-contactor mounting						*Page* *01/88*
Standard		TR-N6/3	TR-N7/3	TR-N8/3	TR-N10/3	
Phase-loss protection		TK-N6	TK-N7	TK-N8	TK-N10	

Downloaded from Arrow.com.

■ Types number nomenclature

SW 5 – 1 H RM C/ □ □ SP

Basic type
SC: Magnetic contactor
SW: Magnetic motor starter *1

Frame size
03 to N16

Auxiliary contact
Blank: Bifurcated contact (03 to N12)
Single button contact (N14, N16)
H: Single button contact (03 to N12)

Non-reversing or reversing
Blank: Non-reversing
RM: Reversing *2

Enclosure
Blank: Open
C: Enclosed
P: Enclosed with ON-OFF/reset pushbuttons (03 to 5-1)
Enclosed with ON-OFF pushbuttons (N1 to N3)
PB: Enclosed with ON-OFF/reset pushbuttons (N1 to N10)
LG: Enclosed, dust-tight and light-corrosion resistant

Special version
SP: For single-phase resistance load

Thermal overload relay
Blank: Standard type, 2-element
3H: Standard type, 3-element
2L: For heavy starting duty, 2-element
3L: For heavy starting duty, 3-element
3Q: Quick operating
2E: With phase-loss protective device

Operating method
Blank: AC operated (03 toN5A)
AC/DC operated (N5 to N16)
G: DC operated (03 to N3)
SE: AC/DC operated (N1 to N4)

U: With extra pick-up operating coil (03 to N4)
V: Mechanical latch, AC operated (03 to 5-1)
VG: Mechanical latch, DC operated (03 to 5-1)
VS: Mechanical latch, AC/DC operated (N1 to N14)

Notes:
*1 Magnetic contactors (SC-□) and thermal overload relays (TR-□) have actual type names on nameplates. Note that an open type magnetic motor starter (SW-□) consists of both items but it has no magnetic motor starter type name on it.
It has names of contactor and thermal overload relay.

• Example
When a motor starter SW-0 is ordered;

Assembled at factory

SC-0 **TR-0N/3** **SW-0/3H**

Nameplates on products

SC-0
TR-0N/3

SW-0/3H ordered

*2 Open type reversing magnetic contactors (SC-□RM) and motor starters (SW-□RM) have no type name on their nameplates describing them as reversing types.

• Example
When a reversing contactor SC-0RM is ordered;

Assembled at factory

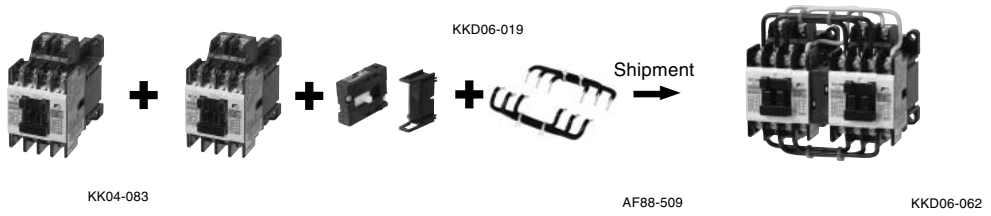

SC-0 **SC-0** **SZ-RM Interlock unit** **SZ-RW1 Power connection kit** **SC-0RM**

■ Ordering information

Specify the following:
1. Ordering code (see next page)
2. Overload relay setting range code
3. Operating coil voltage code
4. Auxiliary contact arrangement code

Downloaded from Arrow.com.

■ Ordering code system

SC series magnetic contactors

SC	25	B	A	A–M	22
①②	③④	⑤	⑥	⑦ ⑨	⑩⑪

SW series magnetic motor starter

SC	25	B	A	A	N–M	22	TB	D
①②	③④	⑤	⑥	⑦	⑧ ⑨	⑩⑪	⑫	⑬

① Product category

Description	Code
Contactor and starter	S

② Series category

Description	Code
SC and SW series	C

③④ Frame size

Frame size	Code	
	③	④
03	1	1
0	1	3
05	1	4
4-0	1	8
4-1	1	9
5-1	2	0
N1	2	5
N2	3	5
N2S	5	0
N3	6	5
N4	8	0
N5	9	3
N6	1	C
N7	1	F
N8	1	J
N10	2	C
N11	3	A
N12	4	A
N14	6	A
N16*	8	A

*Contactor only

⑤ Index

Index	Code
03 to 5-1	Blank
N1 to N16	B
N5A	C

⑥ Version

Description	Code	
	Contactor	Starter
Non-reversing, open		
Standard	A	A
Non-reversing, enclosed		
Standard	C	C
Dust-tight/light-corrosion resistant	–	L
With on – off pushbutton	–	P
With on – off/reset pushbutton	–	J
Reversing, open		
Standard	R	R
Reversing, enclosed		
Standard	M	M
Dust-tight/light-corrosion resistant	–	G

⑦ Coil and contact specifications

Description		Code
Standard	AC operating coil DC operating coil Both AC and DC operating coil With extra pick-up operating coil	A (Up to N5A) G (Up to N5) A (N5 and above) U (Up to N4)
With super magnet	Both AC and DC operating coil	S (N1 to N4)
Mechanical latch (Contactor only)	AC operating coil DC operating coil Both AC and DC operating coil	V (Up to 5-1) D (Up to 5-1) E (N1 and above)
With single-button auxiliary contact	AC operating coil DC operating coil With extra pick-up operating coil	H (Up to N12) Q (Up to N12) L (Up to N12)

⑧ Type of thermal overload relay

Description			Code
Standard	TR-□ TR-□/3	2-element 3-element	N N
Long time operating	TR-□L TR-□L3	2-element 3-element	L F
Quick operating	TR-□Q	3-element	S
Open-phase protection	TK-□	3-element	E

⑨ Coil voltage

● Frame size 03 to N5A
AC coil

Operating coil voltage 50Hz	60Hz	Code
24V	24-26V	E
48V	48-52V	F
100V	100-110V	1
100-110V	110-120V	H
110-120V	120-130V	K
200V	200-220V	2
200-220V	220-240V	M
220-240V	240-260V	P
346-380V	380-420V	S
380-400V	400-440V	4
415-440V	440-480V	T
480-500V	500-550V	5

● Frame size 03 to N5
DC coil

Operating coil voltage	Code
12V DC	B
24V DC	E
48V DC	F
60V DC	G
100V DC	1
110V DC	H
120V DC	K
200V DC	2
210V DC	Y
220V DC	M

● Frame size N1/SE to N4/SE, N5 to N16
AC and DC coil (common)

Operating coil voltage AC 50/60Hz	DC	Code
24-25V	24V	E
48-50V	48V	F
100-127V	100-120V	1
200-250V	200-240V	2
265-347V	–	3
380-450V	–	4
460-575V	–	5

Downloaded from Arrow.com.

⑩⑪ Auxiliary contact

● **SC-03 to 5-1**

Contact arrangement	Code	
	⑩	⑪
1NO	1	0
1NC	0	1
1NO+1NC	1	1
2NO	2	0
2NC	0	2
2NO+2NC	2	2

● **SC-N1 to N16**

Contact arrangement	Code	
	⑩	⑪
2NO+2NC	2	2
3NO+3NC	3	3
4NO+4NC	4	4

⑬ No. of heater element and reset method

Description	Code
Manual reset	
2-element	Blank
3-element	D
Auto reset	
2-element	A
3-element	B

⑫ Thermal overload relay ampere setting range

Ampere setting range (A)	Code	Ampere setting range (A)	Code	Ampere setting range (A)	Code
0.1 - 0.15	TA	4 - 6	TS	65 - 95	TM
0.13 - 0.2	TB	5 - 8	TT	85 - 105	TI
0.15 - 0.24	TC	6 - 9	TU	85 - 125	TN
0.2 - 0.3	TD	7 - 11	TV	110 - 160	TP
0.24 - 0.36	TE	9 - 13	TW	125 - 185	TR
0.3 - 0.45	TF	12 - 18	TX	160 - 240	TS
0.36 - 0.54	TG	16 - 22	TQ	200 - 300	TT
0.48 - 0.72	TH	18 - 26	TB	240 - 360	TU
0.64 - 0.96	TJ	24 - 36	TE	300 - 450	TV
0.8 - 1.2	TK	28 - 40	TF	400 - 600	TW
0.95 - 1.45	TL	32 - 42	TI		
1.4 - 2.2	TM	34 - 50	TG		
1.7 - 2.6	TN	45 - 65	TJ		
2.2 - 3.4	TP	48 - 68	TO		
2.8 - 4.2	TR	53 - 80	TL		

Ordering example

● **Magnetic motor starter**

①	Magnetic starter	S
②	SW series	C
③④	Frame size: 5-1	20
⑤	Index	Blank
⑥	Non-reversing, open: Standard	A
⑦	Operating coil: AC operating	A
⑧	Thermal overload relay: Standard	N
⑨	Operating coil voltage: 220V-240V AC, 50Hz	P
⑩⑪	Auxiliary contact: 1NO+1NC	11
⑫	Thermal overload relay heater range : 9-13	TW
⑬	No. of heater element: 3	D

Ordering code: SC20AAN-P11TWD

● **Magnetic contactor**

①	Magnetic contactor	S
②	SC series	C
③④	Frame size: N6	1C
⑤	Index	B
⑥	Non-reversing, open: Standard	A
⑦	Operating coil: DC operating	A
⑨	Operating coil voltage: 110V DC	1
⑩⑪	Auxiliary contact: 2NO+2NC	22

Ordering code: SC1CBAA-122

■ Correct mounting

(1) The standard mounting shown in Figure 1 is the proper mounting method. Following slanting mounting with front, behind, left and right direction is possible. (Figure 2) Allowable slant angle of SC (SW) - 03 to N16 : 30°

(2) Side mounting can be necessary due to wiring or installation restriction. Side mounting is possible if you consider the followings, except for the types of SC-N14, 16 and mechanically latched type.
- The performance of magnetic contactors is almost the same. Only mechanical durability and switching frequency may decrease.
- The ultimate operational current of thermal overload relay may slightly changes.

(3) Other mountings
- Standard magnetic contactors and starters cannot be mounted on the ceiling. If they were mounted on the ceiling, they could not satisfy the operating performance value specified by Standards due to effect of moving section mass.
- Standard magnetic contactors and starters cannot be mounted horizontally. External vibration or shock may result in malfunction due to effect of moving section mass. Dedicated horizontal mounting models are available on request. Add suffix "Z109" to the type number when ordering. However, the models of "Z109" specification cannot be applied to standard mounting (vertical mounting).

(i) Dedicated horizontal mounting models have 80% of mechanical durability, electrical durability and switching frequency, compared with standard mounting models.

(ii) For magnetic starters, the ultimate operational current of thermal overload relay slightly changes.

(iii) The following models are available; type SC-03 to SC-5-1, type SW-03 to 5-1, type SH-4, 5, type SC-N1 to N10, type SW-N1 to N10, type SC-N1/G to N3/G, type SC-N1/SE to N4/SE, type SB-□N.

(iv) Dedicated horizontal mounting models of type SC-03/G to SC-5-1/G, type SC-N11 to SC-N16, type SB-□NB are not available.

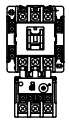

Figure 1 Standard mounting

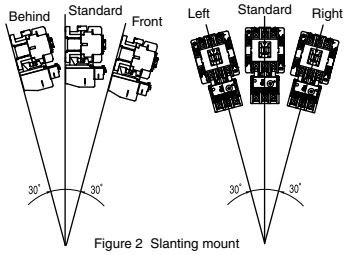

Figure 2 Slanting mount

Downloaded from Arrow.com.

■ Ratings

Conforming to IEC 60947-4-1, EN 60947-4-1, VDE 0660

Contactor Type	Starter Type	Max. motor capacity (kW) 200V–240V	380V–440V	500V–550V	600V–660V	Rated operational current (A) 200V–240V	380V–440V	500V–550V	600V–660V	Thermal current (A) *1
SC-03	**SW-03/3H**	2.5	4	4	4	11	9	7	5	20
SC-0	**SW-0/3H**	3.5	5.5	5.5	5.5	13	12	9	7	20
SC-05	**SW-05/3H**	3.5	5.5	5.5	5.5	13	12	9	7	20
SC-4-0	**SW-4-0/3H**	4.5	7.5	7.5	7.5	18	16	13	9	25
SC-4-1	**SW-4-1/3H**	5.5	11	11	7.5	22	22	17	9	32
SC-5-1	**SW-5-1/3H**	5.5	11	11	7.5	22	22	17	9	32
SC-N1	**SW-N1/3H**	7.5	15	15	11	32	32	24	15	50
SC-N2	**SW-N2/3H**	11	18.5	18.5	15	40	40	29	19	60
SC-N2S	**SW-N2S/3H**	15	22	25	22	50	50	38	26	80
SC-N3	**SW-N3/3H**	18.5	30	37	30	65	65	60	38	100
SC-N4	**SW-N4/3H**	22	40	37	37	80	80	60	44	135
SC-N5A	**SW-N5A/3H**	30	55	55	55	105	105	85	64	150
SC-N6	**SW-N6/3H**	37	60	60	60	125	125	90	72	150
SC-N7	**SW-N7/3H**	45	75	75	90	150	150	120	103	200
SC-N8	**SW-N8/3H**	55	90	130	132	180	180	180	150	260
SC-N10	**SW-N10/3H**	65	110	132	132	220	220	200	150	260
SC-N11	**SW-N11/3H**	90	160	160	200	300	300	230	230	350
SC-N12	**SW-N12/3H**	120	220	250	300	400	400	360	360	450
SC-N14	**SW-N14/3H**	180	315	400	480	600	600	600	600	660
SC-N16	–	220	440	500	500	800	800	720	630	800

Note: *1 The values are applied to contactors.

■ Making and breaking capacities

Utilization category	Typical applications		IEC 60947-4-1, EN 60947-4-1, VDE 0660, JIS C 8201-4-1 Making and breaking Ic/Ie	Ur/Ue	cosø or L/R	Making I/Ie	U/Ue	cosø or L/R
AC-1	Non-inductive or slightly inductive loads, resistance furnaces		1.5	1.05	0.8	1.5	1.05	0.8
AC-2	Slip-ring motors: Starting, switching off		4.0	1.05	0.65	4.0	1.05	0.65
AC-3	Squirrel-cage motors:	Ie 100A	8.0	1.05	0.45	10	1.05	0.45
	Starting, switching off duling running	Ie > 100A	8.0	1.05	0.35	10	1.05	0.35
AC-4	Squirrel-cage motors:	Ie 100A	10	1.05	0.45	12	1.05	0.45
	Starting, plugging, inching	Ie > 100A	10	1.05	0.35	12	1.05	0.35
AC-5a	Switching of electric discharge lamp controls		3.0	1.05	0.45	3.0	1.05	0.45
AC-5b	Switching of incandescent lamps		1.5	1.05	*	1.5	1.05	*

Note: *Test to be carried out with an incandescent lamp load.
Ie: Rated operational current Ue: Rated operational voltage I: Current made
U: Voltage before make Ur: Recovery voltage Ic: Current broken

■ Auxiliary contact ratings

Conforming to IEC 60947-5-1, EN 60947-5-1, VDE 0660

Type	Continuous currnet (A)	Make and break capacity at AC (A)	Rated operational current (A) AC Voltage (V)	AC-15 (Ind.load)	AC-12 (Res.load)	DC Voltage (V)	DC-13 (Ind.load)	DC-12 (Res.load)	Minimum voltage and current
SC-03 to SC-N12	10	60	100–120	6	10	24	3	5	5V 3mA
		30	200–240	3	8	48	1.5	3	
		15	380–440	1.5	5	110	0.55	2.5	
		12	500–600	1.2	5	220	0.27	1	
SC-N14 to SC-16N	10	60	100–120	6	10	24	5	10	24V 10mA
		60	200–240	6	10	48	1.5	5	
		40	380–440	4	10	110	0.55	2.5	
		25	500–600	2.5	10	220	0.27	1	

Downloaded from Arrow.com.

■ Inching and plugging operations (Conforming to IEC 60947-4-1)

In applications where inching and plugging operations are included the contact wear will be increased. Therefore, it is necessary to select ones having larger frame sizes than in standard applications so as to minimize the needs of maintenance and replacement.

Voltage	Motor ratings Capacity (kW)	Full load current (A)	50% inching operation Electrical durability 100,000 operations	500,000 operations
200V	0.2	1.8	SC-03	SC-03
|	0.4	3.2	SC-03	SC-03
240V	0.75	4.8	SC-03	SC-0, 05
	1.5	8.0	SC-03	SC-4-1, 5-1
	2.2	11.1	SC-4-0	SC-N1
	3.7	17.4	SC-4-1, 5-1	SC-N2
	5.5	26	SC-N1	SC-N3
	7.5	34	SC-N2	SC-N5A
	11	48	SC-N2S	SC-N7
	15	65	SC-N4	SC-N8
	18.5	79	SC-N5A	SC-N10
	22	93	SC-N6	SC-N11
	30	124	SC-N7	SC-N14
	37	152	SC-N8	SC-N14
	45	180	SC-N10	–
	55	220	SC-N11	–
	75	300	SC-N14	–
380V	0.75	2.4	SC-03	SC-03
|	1.5	4.0	SC-03	SC-03
440V	2.2	5.6	SC-03	SC-4-0
	3.7	8.7	SC-03	SC-4-1, 5-1
	5.5	13	SC-4-0	SC-N1
	7.5	17	SC-4-1, 5-1	SC-N2S
	11	24	SC-N1	SC-N3
	15	32.5	SC-N2	SC-N5A
	18.5	39.5	SC-N2S	SC-N6
	22	46.5	SC-N3	SC-N7
	30	62	SC-N4	SC-N8
	37	76	SC-N5A	SC-N10
	45	90	SC-N6	SC-N11
	55	110	SC-N8	SC-N12
	75	150	SC-N10	SC-N14
	90	180	SC-N11	–
	110	220	SC-N12	–
	132	264	SC-N14	–
	150	300	SC-N14	–
	160	320	SC-N14	–

Notes: 1. Inching % = $\frac{\text{No. of inching operations}}{\text{Total No. of switching operations}} \times 100\%$

2. Light inching: 50%
Printing machine and similar equipment
Heavy inching: 75 – 100%
Machine tool, hoist and similar equipment (In cases when there are frequent on/off operations involving starting rush current).

■ Standard conditions for operation in service

- Temperature range:
  Operating: –5°C to+40°C
  (–5°C to + 55°C inside panel box)
  Storage: –40°C to + 65°C
- Humidity: 45 to 85% RH
- Vibration: 10 to 55Hz, 15m/s²
- Shock: 50m/s²
- Altitude: 2000m (6600ft) or lower
- IP40

■ Breaking current and electrical durability

SC-03 to 5-1

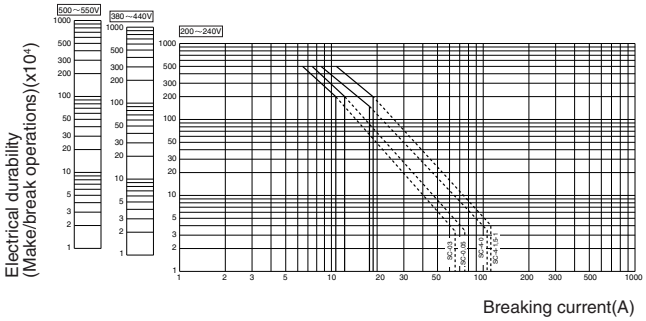

SC-N1 to N3

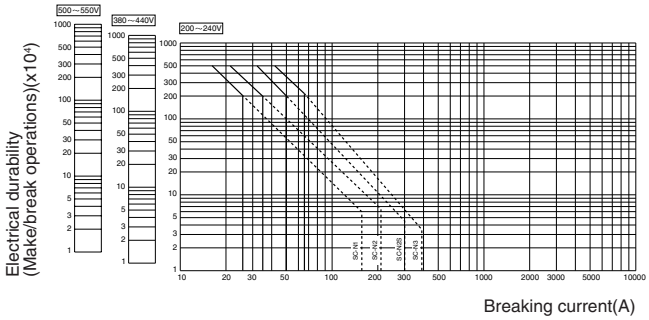

SC-N4 to N16

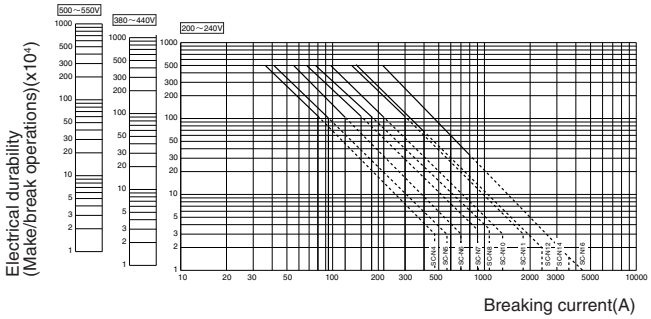

■ Testing method—Category AC-3

The method of determining the life expectancy and performance is prescribed by IEC as below.

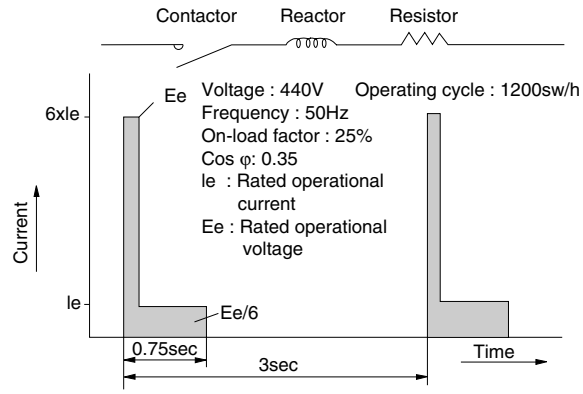

A current equal to six times that of the rated operational current of the starter is applied to the terminals the switch is closed and the current immediately reduced to the rated operational current and then interrupted.

Downloaded from Arrow.com.

■ Performance data

Frame size	Making capacity I/Ie	Breaking capacity I/Ie	Operating cycles per hour	Voltage	Durability (operations) Electrical *	Mechanical
03, 0, 05	12	10	1,800	200/240V AC 380/440V AC	2 million	10 million
4-0	12	10	1,800	200/240V AC 380/440V AC	1.5 million	10 million
4-1, 5-1	12	10	1,800	200/240V AC 380/440V AC	2 million	10 million
N1 to N3	12	10	1,200	200/240V AC 380/440V AC	2 million	10 million (N1, N2) 5 million (N2S, N3)
N4 to N11	12	10	1,200	200/240V AC 380/440V AC	1 million	5 million
N12, N14	12	10	1,200	200/240V AC 380/440V AC	500,000	5 million
N16	12	10	1,200	200/240V AC 380/440V AC	250,000	2.5 million

Ie: Rated operational currnet. I: Making or breaking current * For delails, refer to page 01/21

■ Coil voltage

● Frame size 03 to N5A

Frame size	Coil operating voltage and frequency (AC)			Order voltage	Coil voltage code	Identificaiton by coil color	Wiring
03	24V	50Hz/24–26V	60Hz	AC24V	**E**	White	
0	48V	50Hz/48–52V	60Hz	AC48V	**F**	White	
05	100V	50Hz/100–110V	60Hz	AC100V	**1**	Green (Standard voltage)	
4-0	100–110V	50Hz/110–120V	60Hz	AC110V	**H**	White	
4-1	110–120V	50Hz/120–130V	60Hz	AC120V	**K**	White	
5-1	200V	50Hz/200–220V	60Hz	AC200V	**2**	Yellow (Standard voltage)	A1 A2
N1	200–220V	50Hz/220–240V	60Hz	AC220V	**M**	White	
N2	220–240V	50Hz/240–260V	60Hz	AC240V	**P**	White	
N2S	346–380V	50Hz/380–420V	60Hz	AC380V	**S**	White	
N3	380–400V	50Hz/400–440V	60Hz	AC400V	**4**	Purple (Standard voltage)	
N4	415–440V	50Hz/440–480V	60Hz	AC440V	**T**	White	
N5A	480–500V	50Hz/500–550V	60Hz	AC500V	**5**	White	

Notes:
- Other voltages are available in 24 to 600V ranges on request.
- For frame size N1/SE to N4/SE, 24V to 250V AC (24V to 240V DC) is available.
- Use the coil voltage code, not specifying your actual voltage when ordering. Contactors with coil voltage range which corresponds to the voltage code you specified will be shipped from factory.
  The above coil operating voltage and frequency (not voltage code) are shown on the products.

● Frame size N5 to N16

Frame size	Coil operating voltage and frequency AC		DC	Order voltage	Coil voltage code	Identificaiton by coil color	Wiring
N5	24–25V	50/60Hz	24V	AC24V *3	**E**	White	
N6	48–50V	50/60Hz	48V	AC48V *3	**F**	White	
N7	100–127V	50/60Hz	100–120V *1	AC100V	**1**	Green (Standard voltage)	A1 A2
N8							
N10	200–250V	50/60Hz	200–240V *2	AC200V	**2**	Yellow (Standard voltage)	
N11	265–347V	50/60Hz	–	AC300V	**3**	White	
N12	380–450V	50/60Hz	–	AC400V	**4**	Purple (Standard voltage)	
N14	460–575V	50/60Hz	–	AC500V	**5**	White	
N16							

Notes:
- The coils are AC/DC common use (rated voltage 200V or less)
- Standard rated voltages are 100V, 200V and 400V.
  Other voltages are available in 24V to 575V AC (24V to 240V DC) in frame size N5 to N12, also available in 100V to 575V AC (100V to 240V DC) in frame size N14 to N16.
- Use the coil voltage code, not specifying your actual voltage when ordering. Contactors with coil voltage range which corresponds to the voltage code you specified will be shipped from factory.
  The above coil operating voltage and frequency (not voltage code) are shown on the products.

*1 The coil voltage from a DC power supply with single phase full-wave rectification will be 100 to 110 V.
*2 The coil voltage from a DC power supply with single phase full-wave rectification will be 200 to 220 V.
*3 The coil voltage 24V and 48V are not available in frame size N14 to N16.

Downloaded from Arrow.com.

■ Coil characteristics

● Frame size 03 to N5A

Frame size	Power consumption Inrush (VA)	Power consumption Sealed (VA)	Watt loss (W) 200V 50Hz	Watt loss (W) 220V 60Hz	Pick-up voltage (V) 200V 50Hz	Pick-up voltage (V) 220V 60Hz	Drop-out voltage (V) 200V 50Hz	Drop-out voltage (V) 220V 60Hz	Operating time (ms) Coil ON→ Contact ON	Operating time (ms) Coil OFF→ Contact OFF
03	95	9	2.7	2.8	105–125	116–136	70–98	80–110	9–20	5–16
0	95	9	2.7	2.8	105–125	116–136	70–98	80–110	9–20	5–16
05	95	9	2.7	2.8	105–125	116–136	70–98	80–110	9–20	5–16
4–0	95	9	2.7	2.8	118–136	130–146	75–106	88–120	9–20	5–16
4–1	95	9	2.7	2.8	118–136	130–146	75–106	88–120	9–20	5–16
5–1	95	9	2.7	2.8	118–136	130–146	75–106	88–120	9–20	5–16
N1	135	12.7	3.6	3.8	110–130	120–140	75–105	85–115	10–17	6–17
N2	135	12.7	3.6	3.8	110–130	120–140	75–105	85–115	10–17	6–17
N2S	190	13.4	4.5	5	115–135	130–150	85–110	100–125	10–18	8–18
N3	190	13.4	4.5	5	115–135	130–150	85–110	100–125	10–18	8–18
N4	210	14.4	4.8	5.3	120–140	135–155	70–95	95–120	16–23	7–17
N5A	260	18.1	6.2	6.7	115–145	135–150	80–90	90–110	13–21	6–12

Note: Coil ratings 200V 50Hz, 200 to 220V 60Hz. Operating time is based on 200V 50Hz.

● Frame size N5 to N16, N1/SE to N4/SE (contactor only)

AC operating

Frame size	Power consumption Inrush (VA)	Power consumption Sealed (VA)	Watt loss (W) 200V 50Hz	Watt loss (W) 220V 60Hz	Pick-up voltage (V) 200V 50/60Hz	Drop-out voltage (V) 200V 50/60Hz	Operating time (ms) Coil ON→ Contact ON	Operating time (ms) Coil OFF→ Contact OFF
N5	95	4.6	3.2	3.6	140–150	60–100	39–45	27–33
N6	230	5.8	3.4	3.7	140–150	60–100	31–37	30–36
N7	230	5.8	3.4	3.7	140–150	60–100	31–37	30–36
N8	255	6.2	4.7	5.2	140–150	60–100	38–44	31–37
N10	255	6.2	4.7	5.2	140–150	60–100	38–44	31–37
N11	320	6.5	5.6	6	140–150	60–100	43–49	41–47
N12	320	6.5	5.6	6	140–150	60–100	43–49	41–47
N14	460	11	7.8	8.6	140–160	60–100	69–75	56–62
N16	460	11	7.8	8.6	140–160	60–100	69–75	56–62
N1/SE	130	4.2	2.8	3.2	140–150	60–100	21–27	18–24
N2/SE	130	4.2	2.8	3.2	140–150	60–100	21–27	18–24
N2S/SE	160	4.3	2.9	3.3	140–150	60–100	24–30	24–32
N3/SE	160	4.3	2.9	3.3	140–150	60–100	24–30	24–32
N4/SE	95	4.6	3.2	3.6	140–150	60–100	39–45	26–33

Note: Coil ratings 200 to 250V 50/60Hz, 200 to 220V DC. Operating time is based on 200V 50/60Hz.

DC operating

Frame size	Power consumption Inrush (W)	Power consumption Sealed (W)	Time constant (ms) Sealed	Pick-up voltage (V) 200V DC	Drop-out voltage (V) 200V DC	Operating time (ms) Coil ON→ Contact ON	Operating time (ms) Coil OFF→ Contact OFF
N5	110	3	1	140–160	40–100	35–41	26–32
N6	275	4	1	140–160	40–100	28–34	27–33
N7	275	4	1	140–160	40–100	28–34	27–33
N8	300	4.5	1	140–160	40–100	33–39	31–37
N10	300	4.5	1	140–160	40–100	33–39	31–37
N11	410	4.6	1	140–160	40–100	38–44	41–47
N12	410	4.6	1	140–160	40–100	38–44	41–47
N14	500	8.8	1	140–160	40–100	64–70	52–57
N16	500	8.8	1	140–160	40–100	64–70	52–57

Note: Coil ratings 200 to 250V 50/60Hz, 200 to 220V DC. Operating time is based on 200V DC.

Downloaded from Arrow.com.

DC applications of magnetic contactors

■ Description

FUJI magnetic contactors in the SC series are normally used in AC circuit applications. However, they may also be used in DC circuits, and in this case their contacts must be connected in series as shown in the diagram.
When used in this manner they will be found to be more economical than using contactors exclusively designed for DC applications. Coils are available for both AC and DC.
If the following ratings are observed the equipment will have an electrical durability of approx. 500,000 operations.

■ Wiring connection

Contacts must be connected in series when the contactors are used in DC applications.

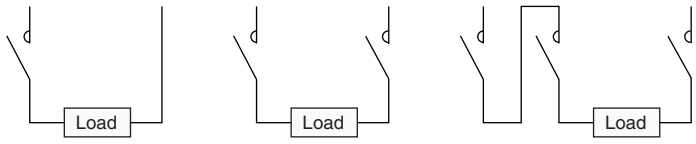

Series contact 1 Series contact 2 Series contact 3

■ Ratings

Type	No. of contacts connected in series	Rated operational current (A)							
		Class DC-1(JEM1038) (Resistive, L/R ≦ 1ms.)				Class DC2, 4,(JEM1038) (DC motor, L/R ≦ 15ms.)			
		24V	48V	110V	220V	24V	48V	110V	220V
SC-03	1	13	13	10	1.2	6	3	2	0.35
	2	13	13	10	6	12	6	4	1.2
	3	15	15	15	15	15	10	8	4
SC-0	1	13	13	10	1.2	6	3	2	0.35
	2	13	13	10	6	12	6	4	1.2
	3	15	15	15	15	15	10	8	4
SC-05	1	13	13	10	1.2	6	3	2	0.35
	2	13	13	10	6	12	6	4	1.2
	3	15	15	15	15	15	10	8	4
SC-4-0	1	16	13	10	1.5	8	6	2	0.35
	2	16	16	12	8	16	12	6	1.5
	3	18	18	18	15	18	18	12	6
SC-4-1	1	20	15	12	2	10	8	3	0.35
	2	20	20	15	10	20	15	8	2
	3	22	22	20	15	22	22	15	8
SC-5-1	1	20	15	12	2	10	8	3	0.35
	2	20	20	15	10	20	15	8	2
	3	22	22	20	15	22	22	15	8
SC-N1	1	25	25	15	2	15	8	3	0.35
	2	25	25	25	20	25	15	8	2
	3	35	35	30	25	35	25	20	8
SC-N2	1	30	30	20	2	20	15	4	0.35
	2	30	30	30	20	30	20	15	3
	3	45	45	40	35	35	30	30	8
SC-N2S	2	60	60	40	20	60	30	20	3.5
	3	60	60	60	40	60	60	60	13
SC-N3	2	80	80	50	20	80	40	20	4
	3	80	80	80	60	80	80	80	20
SC-N4	2	80	80	50	20	80	40	20	4
	3	80	80	80	60	80	80	80	20
SC-N5A	2	120	120	80	40	120	80	40	15
	3	120	120	120	120	120	120	120	80
SC-N6	2	120	120	80	40	120	80	40	15
	3	120	120	120	120	120	120	120	80
SC-N7	2	160	160	100	80	160	120	80	40
	3	160	160	160	160	160	160	160	160
SC-N8	2	200	200	160	160	200	160	120	60
	3	200	200	200	200	200	200	200	200
SC-N10	2	200	200	160	160	200	160	120	60
	3	200	200	200	200	200	200	200	200
SC-N11	2	300	300	200	200	300	200	160	80
	3	300	300	300	300	300	300	300	300
SC-N12	2	400	400	330	300	400	300	200	100
	3	400	400	400	400	400	400	400	400
SC-N14	2	600	500	420	300	–	–	–	–
	3	600	600	600	420	–	–	–	–

Downloaded from Arrow.com.

Standard type non-reversing contactors and starters

Up to 315kW 440 Volts 3-phase
(440kW for contactor only)

■ Description

The starter consists of a magnetic contactor and a thermal overload relay and is designed for the full voltage starting of 3-phase induction motor.

■ Standards

- Meet the requirements of BS, NEMA, IEC, VDE and JIS.
  The SC series contactors have already been approved by NK, LR, BV for marine use, UL, CSA and TÜV. These contactors can be used universally because of their high efficiency and reliability and are completely safe. Their maximum rated voltage is 660V AC.

■ Features

SC-03 to SC-5-1

- Small frame contactors have such options as additional auxiliary blocks, operation counter unit with snap-on fittings, and coil surge suppressors. Modification can be made quickly and easily on site.
- Bifurcated type auxiliary contacts have a high degree of contact reliability. They can be used in low level circuit of 5V, 3mA.
- Type and rating are indicated on the front of contactor.

Contactors with single button auxiliary contacts (SC-03H to N12H)
See page 01/64

KK04-086

SC-5-1

KKD08-131

SW-N5A/3H

SC-N1 to SC-N16

- Adoption of improved contact material and arc-extinguishing grid permits further improvement in breaking efficiency.
- Type and rating are indicated on the front of contactor.
- Auxiliary contact arrangements are available up to 4NO+4NC.
- Can be mounted on 35mm rails to meet the requirements of IEC Standards. (SC-N1 to N3)
- Bifurcated type auxiliary contacts have a high degree of contact reliability. They can be used in low level circuit of 5V, 3mA.(SC-N1 to N12)

SUPER MAGNET(SC-N6 to SC-N16)

- The electronically-controlled SUPER MAGNET has an IC built into the coil circuit. Its operation is based on the "AC input, DC operated" concept.
- Operate on both AC and DC power supply. The operating voltage range has been greatly expanded.
- Coil burning and contact chattering due to voltage fluctuation have been eliminated.
- A built-in surge suppression device prevents surges from occurring on ON-OFF operations.

■ Thermal overload relays

- Superior protection
  The starter is fitted with a TR type thermal overload relay which features ambient temperature compensation, auto-manual resetting, and trip indicator.
- Alarm contacts are available in 1NO+1NC arrangements.
- Optional operation indicating lamp can be fitted on request.

■ Thermal overload relays :
See page 01/88.
■ Auxiliary contact ratings :
See page 01/20.
■ Performance data :
See page 01/22.
■ Coil ratings : *See page 01/22.*

■ Types and ratings

Max. motor capacity (kW) 200V 240V	380V 440V	Rated operation current (A) 200V 240V	380V 440V	Rated thermal current (A)	Auxiliary contact NO	NC	Contactor Open Type	Ordering code	Starter (3-element) Open Type	Ordering code	Enclosed Type	Ordering code
2.5	4	11	9	20	1	–*1	**SC-03**	SC11AA-■10	**SW-03/3H**	SC11AAN-■10T□D	**SW-03C/3H**	SC11CAN-■10T□D
3.5	5.5	13	12	20	1	–*1	**SC-0**	SC13AA-■10	**SW-0/3H**	SC13AAN-■10T□D	**SW-0C/3H**	SC13CAN-■10T□D
3.5	5.5	13	12	20	1	1*2	**SC-05**	SC14AA-■11	**SW-05/3H**	SC14AAN-■11T□D	**SW-05C/3H**	SC14CAN-■11T□D
4.5	7.5	18	16	25	1	–*1	**SC-4-0**	SC18AA-■10	**SW-4-0/3H**	SC18AAN-■10T□D	**SW-4-0C/3H**	SC18CAN-■10T□D
5.5	11	22	22	32	1	–*1	**SC-4-1**	SC19AA-■10	**SW-4-1/3H**	SC19AAN-■10T□D	**SW-4-1C/3H**	SC19CAN-■10T□D
5.5	11	22	22	32	1	1*3	**SC-5-1**	SC20AA-■11	**SW-5-1/3H**	SC20AAN-■11T□D	**SW-5-1C/3H**	SC20CAN-■11T□D
7.5	15	32	32	50	2	2	**SC-N1**	SC25BAA-■22	**SW-N1/3H**	SC25BAAN-■22T□D	**SW-N1C/3H**	SC25BCAN-■22T□D
11	18.5	40	40	60	2	2	**SC-N2**	SC35BAA-■22	**SW-N2/3H**	SC35BAAN-■22T□D	**SW-N2C/3H**	SC35BCAN-■22T□D
15	22	50	50	80	2	2	**SC-N2S**	SC50BAA-■22	**SW-N2S/3H**	SC50BAAN-■22T□D	**SW-N2SC/3H**	SC50BCAN-■22T□D
18.5	30	65	65	100	2	2	**SC-N3**	SC65BAA-■22	**SW-N3/3H**	SC65BAAN-■22T□D	**SW-N3C/3H**	SC65BCAN-■22T□D
22	40	80	80	135	2	2	**SC-N4**	SC80BAA-■22	**SW-N4/3H**	SC80BAAN-■22T□D	**SW-N4C/3H**	SC80BCAN-■22T□D
30	55	105	105	150	2	2	**SC-N5A**	SC93CAA-■22	**SW-N5A/3H**	SC93CAAN-■22T□D	**SW-N5AC/3H**	SC93CCAN-■22T□D
37	60	125	125	150	2	2	**SC-N6**	SC1CBAA-■22	**SW-N6/3H**	SC1CBAAN-■22T□D	**SW-N6C/3H**	SC1CBCAN-■22T□D
45	75	150	150	200	2	2	**SC-N7**	SC1FBAA-■22	**SW-N7/3H**	SC1FBAAN-■22T□D	**SW-N7C/3H**	SC1FBCAN-■22T□D
55	90	180	180	260	2	2	**SC-N8**	SC1JBAA-■22	**SW-N8/3H**	SC1JBAAN-■22T□D	**SW-N8C/3H**	SC1JBCAN-■22T□D
65	110	220	220	260	2	2	**SC-N10**	SC2CBAA-■22	**SW-N10/3H**	SC2CBAAN-■22T□D	**SW-N10C/3H**	SC2CBCAN-■22T□D
90	160	300	300	350	2	2	**SC-N11**	SC3ABAA-■22	**SW-N11/3H**	SC3ABAAN-■22T□D	**SW-N11C/3H**	SC3ABCAN-■22T□D
120	220	400	400	450	2	2	**SC-N12**	SC4ABAA-■22	**SW-N12/3H**	SC4ABAAN-■22T□D	**SW-N12C/3H**	SC4ABCAN-■22T□D
180	315	600	600	660	2	2	**SC-N14**	SC6ABAA-■22	**SW-N14/3H**	SC6ABAAN-■22T□D	**SW-N14C/3H**	SC6ABCAN-■22T□D
220	440	800	800	800	2	2	**SC-N16**	SC8ABAA-■22				

Notes : 1. ■ : Coil voltage code, □ : Thermal overload relay ampere setting range code, see page 01/19.
2. *1 Auxiliary contact 1NC is available. *2 Auxiliary contact 2NC or 2NC is available.
*3 Auxiliary contact 2NO, 2NC, or 2NO+2NC is available. For enclosed type, 2NO+2NC is not available.
3. Auxiliary contact 4NO+4NC is available on request for frame size N1 and above.
4. Contactor with enclosure is also available.

Downloaded from Arrow.com.

■ Dimensions, mm
Contactors/Open type

■ Wiring diagrams

Auxiliary contact

SC-03, SC-0

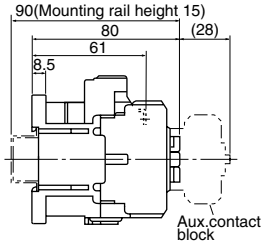

Mass: 0.32kg

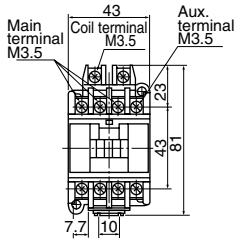

Panel drilling

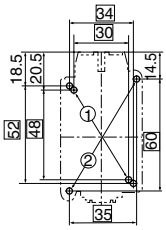

1NO

1NC

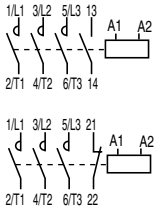

SC-05

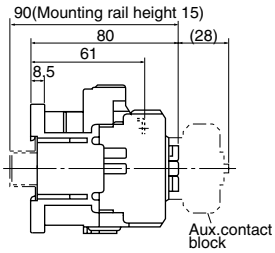

Mass: 0.34kg

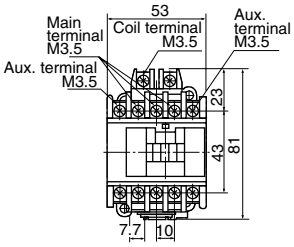

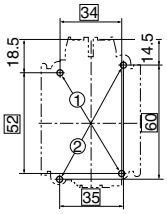

2NO

1NO+1NC

2NC

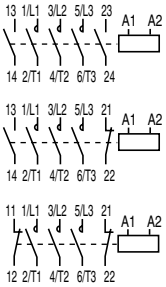

SC-4-0, SC-4-1

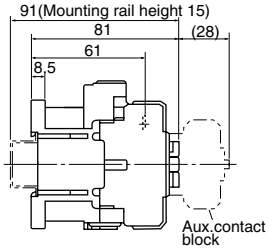

Mass: 0.36kg

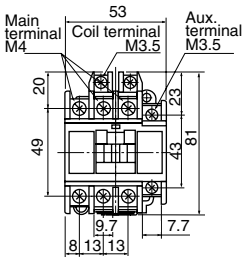

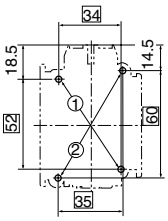

1NO

1NC

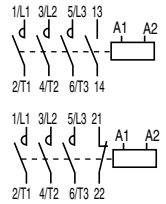

SC-5-1

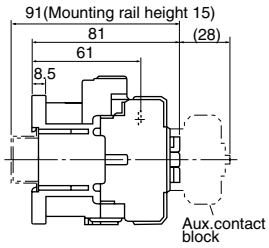

Mass: 0.38kg

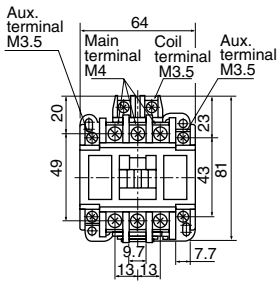

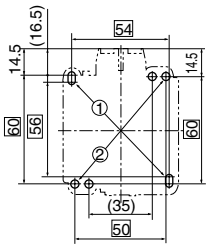

2NO

1NO+1NC

2NC

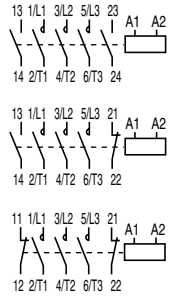

SC-5-1

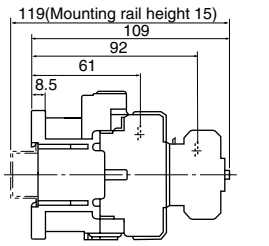

Mass: 0.4kg

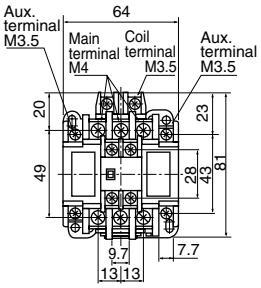

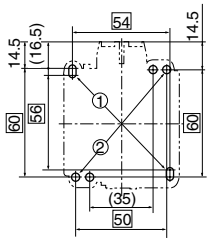

2NO+2NC

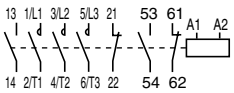

Note: Use the two mounting holes on a diagonal line to mount a contactor.
Mounting holes indicated by ① are compatible with those of SRC type.
Mounting holes indicated by ② are compatible with IEC standard

Downloaded from Arrow.com.

■ Dimensions, mm
Contactors/Open type

SC-N1, SC-N2

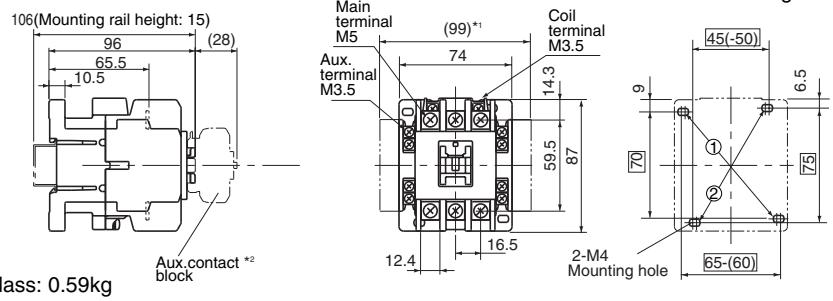

Mass: 0.59kg

SC-N2S, SC-N3

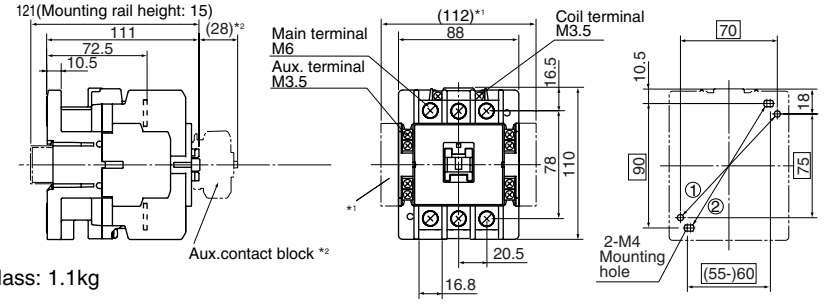

Mass: 1.1kg

SC-N4

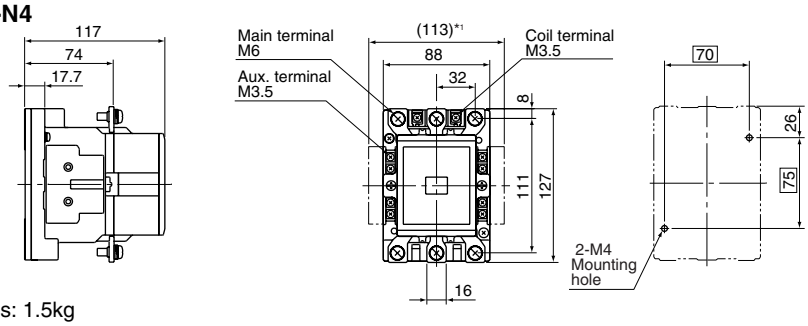

Mass: 1.5kg

SC-N5A

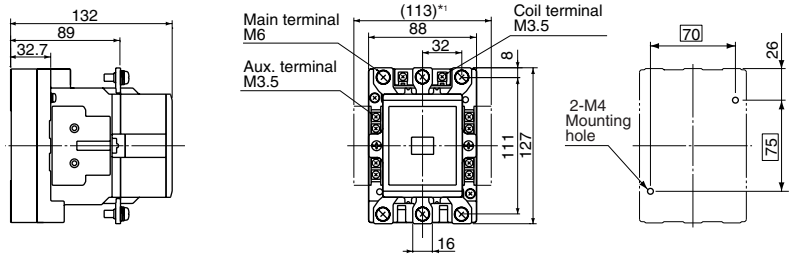

Mass: 1.5kg

SC-N6

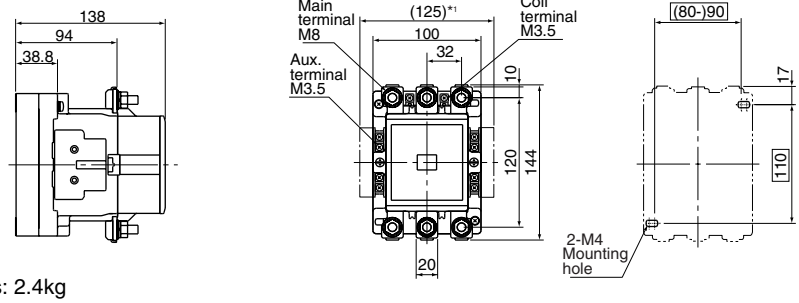

Mass: 2.4kg

■ Wiring diagrams
SC-N1 to SC-N16

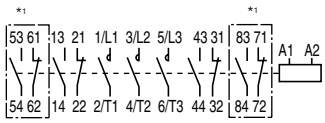

*1 In case of auxiliary contact 4NO+4NC

Note: • Use the two mounting holes on a diagonal line to mount a contactor.
Mounting holes indicated by ① are compatible with those of SRC type.
Mounting holes indicated by ② are compatible with IEC standard
*1 For two side mounting aux. contact blocks mounted
*2 For front mounting aux. contact blocks mounted

Downloaded from Arrow.com.

■ Dimensions, mm
Contactors/Open type

SC-N7

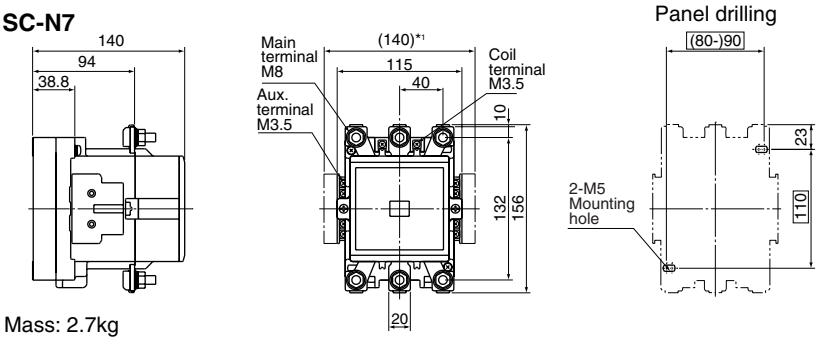

Mass: 2.7kg

SC-N8, SC-N10

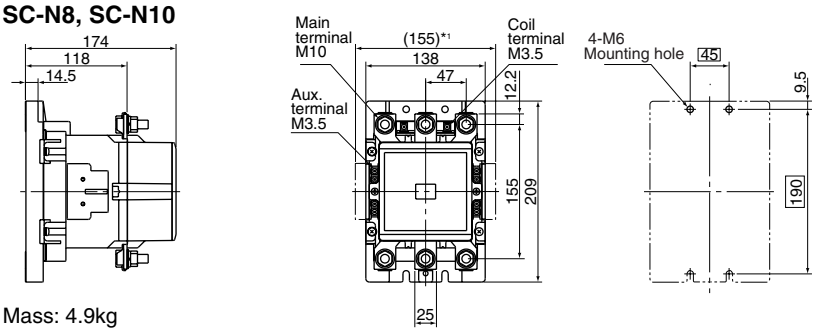

Mass: 4.9kg

SC-N11, SC-N12

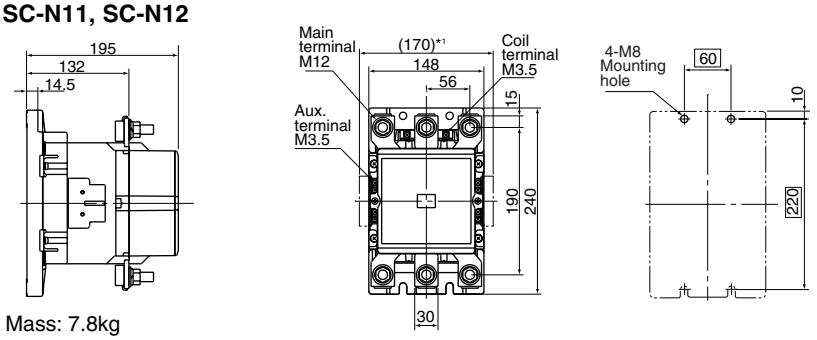

Mass: 7.8kg

SC-N14

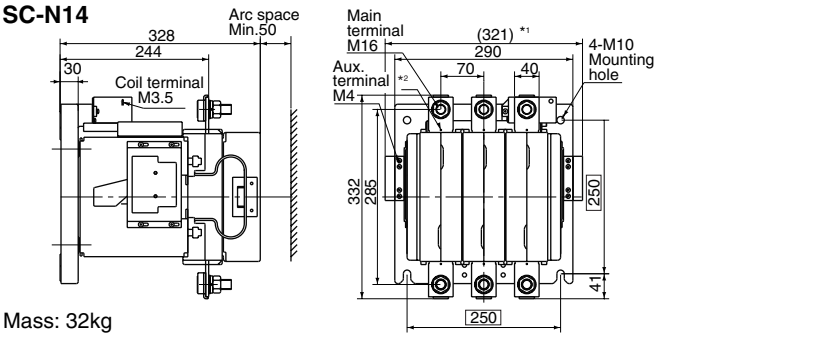

Mass: 32kg

SC-N16

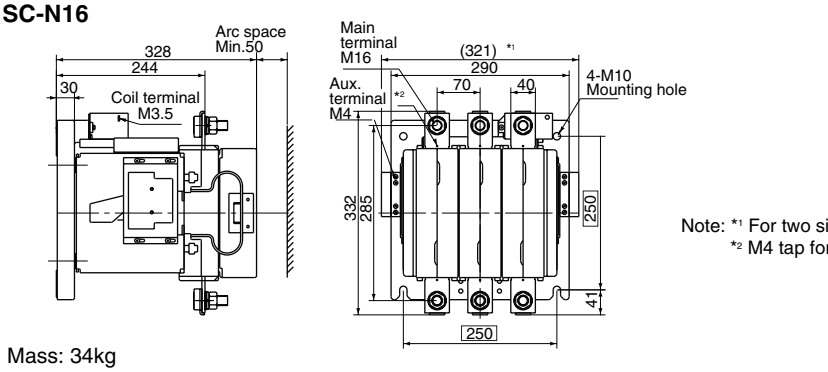

Mass: 34kg

Note: *1 For two side mounting aux.contact blocks mounted
*2 M4 tap for control circuit

Downloaded from Arrow.com.

■ Dimensions, mm

Starters/Open type

SW-03/3H, SW-0/3H

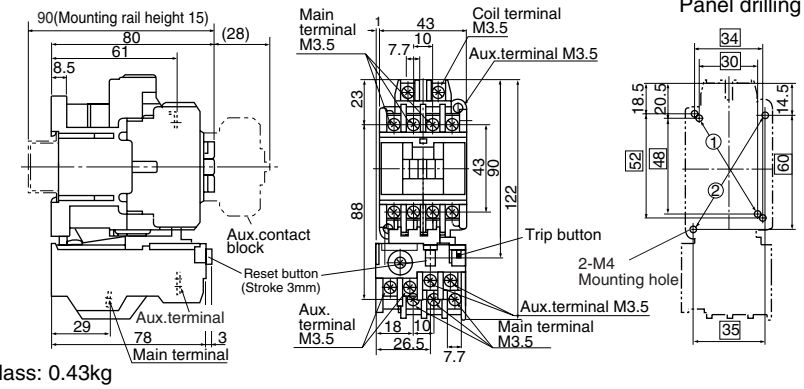

Mass: 0.43kg

SW-05/3H

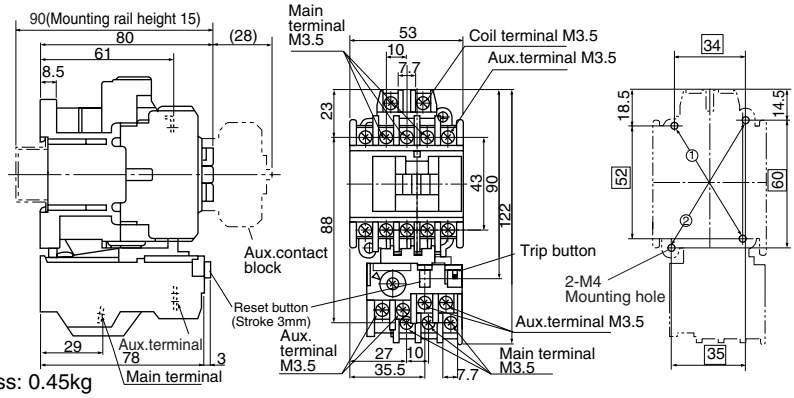

Mass: 0.45kg

SW-4-0/3H, SW-4-1/3H

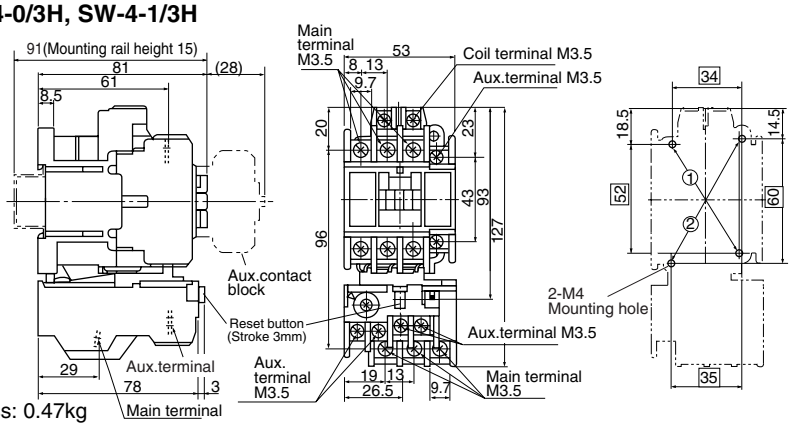

Mass: 0.47kg

SW-5-1/3H

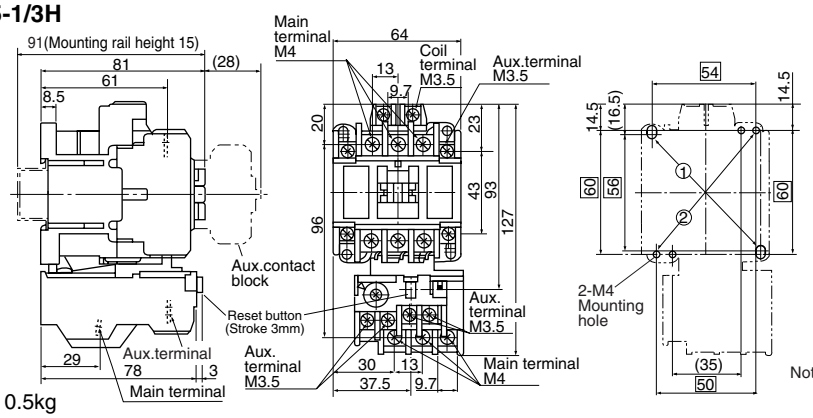

Mass: 0.5kg

■ Wiring diagrams

Auxiliary contact

1NO

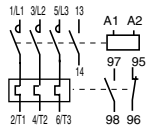

1NC

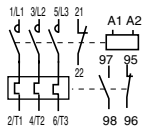

2NO

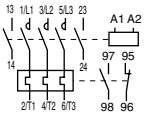

1NO+1NC

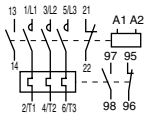

2NC

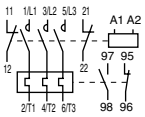

1NO

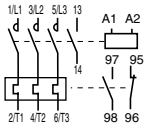

1NC

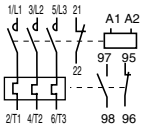

2NO

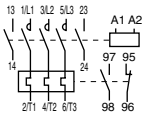

1NO+1NC

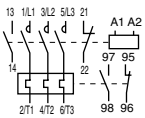

2NC

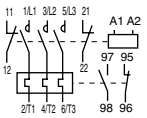

Note: Use the two mounting holes on a diagonal line to mount a contactor.
Mounting holes indicated by ① are compatible with those of SRC type.
Mounting holes indicated by ② are compatible with IEC standard

Downloaded from Arrow.com.

■ Dimensions, mm
Starters/Open type

SW-5-1/3H

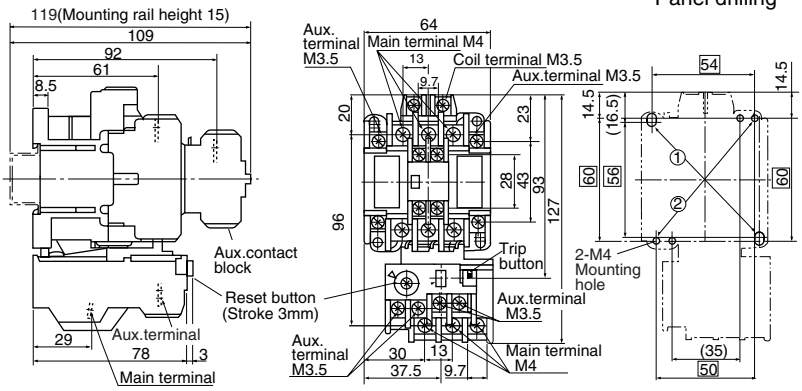

Mass: 0.52kg

■ Wiring diagrams
SW-5-1/3H

Auxiliary contact

2NC+2NO

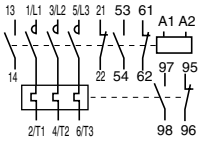

SW-N1/3H, SW-N2/3H

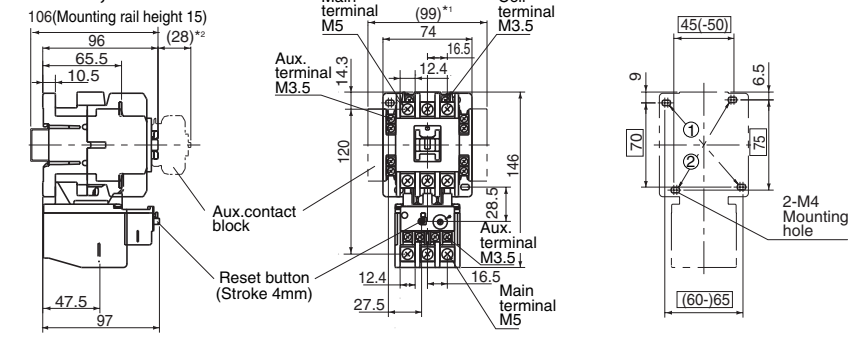

Mass: 0.77kg

■ Wiring diagrams
SW-N1/3H to SW-N8/3H

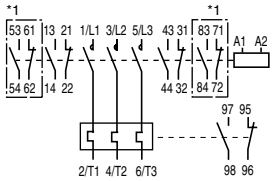

*1 In case of auxiliary contact 4NO+4NC

SW-N2S/3H, SW-N3/3H

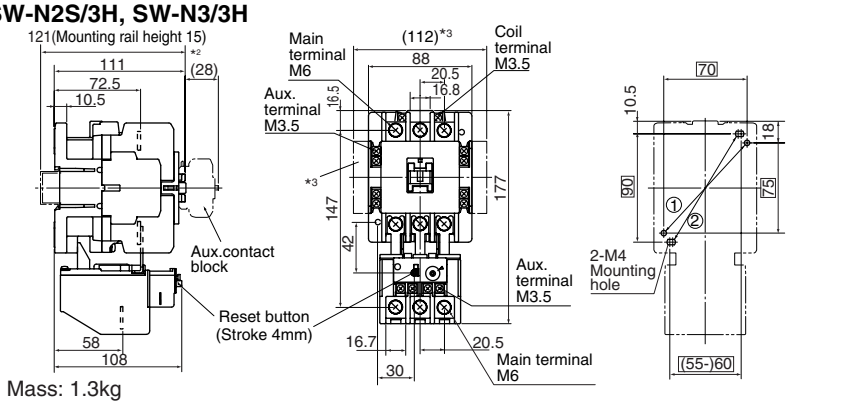

Mass: 1.3kg

SW-N4/3H

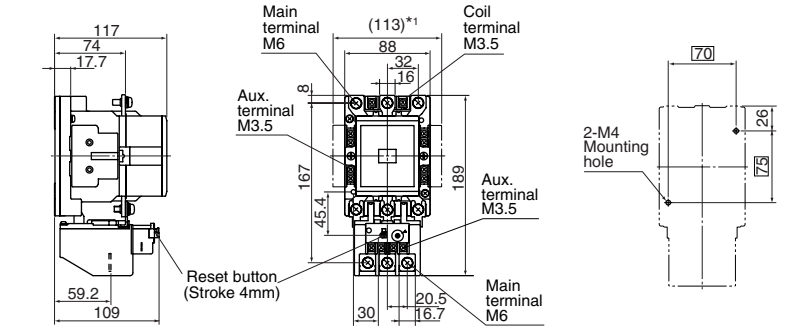

Mass: 1.7kg

Note: • Use the two mounting holes on a diagonal line to mount a contactor.
Mounting holes indicated by ① are compatible with those of SRC type.
Mounting holes indicated by ② are compatible with IEC standard
*1 For two side mounting aux. contact blocks mounted
*2 For front mounting aux. contact blocks mounted

Downloaded from Arrow.com.

■ Dimensions, mm

Starters/Open type

SW-N5A/3H

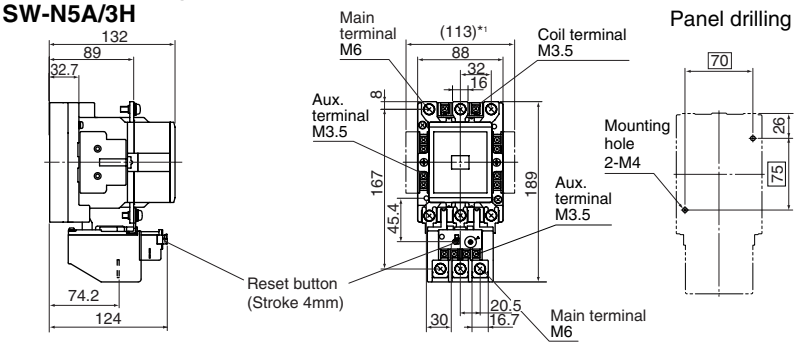

Mass: 1.7kg

SW-N6/3H

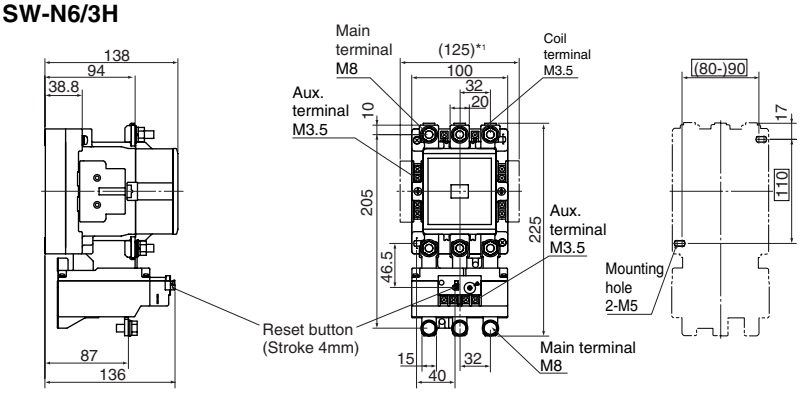

Mass: 3kg

SW-N7/3H

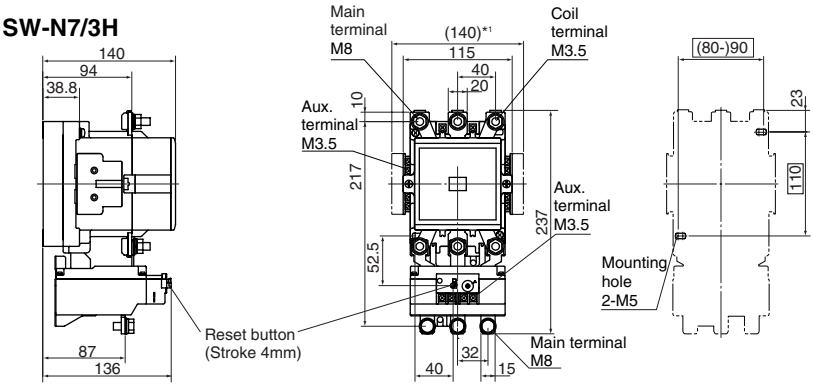

Mass: 3.3kg

SW-N8/3H

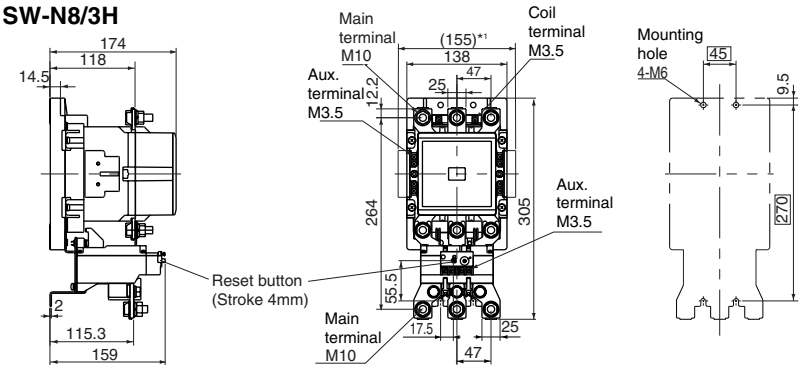

Mass: 6.1kg

Note: *1 For two side mounting aux. contact blocks mounted

Downloaded from Arrow.com.

■ Dimensions, mm

Starters/Open type

SW-N10/3H

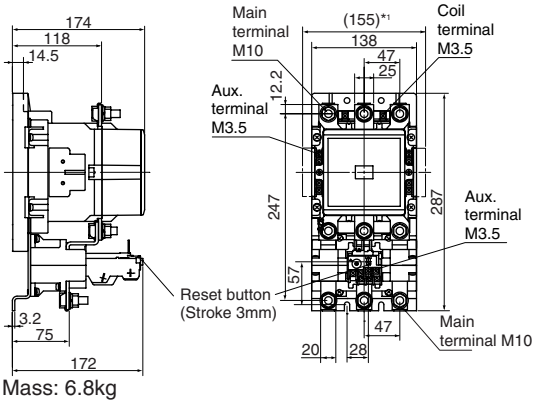

Mass: 6.8kg

Panel drilling

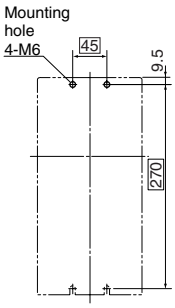

SW-N11/3H, SW-N12/3H

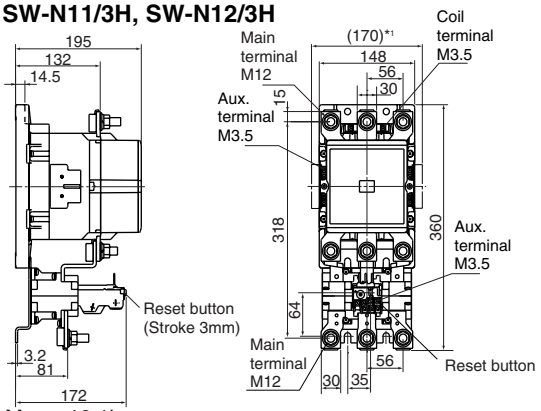

Mass: 10.1kg

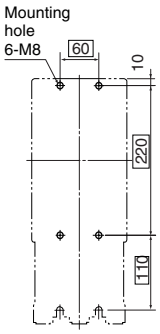

SW-N14/3H

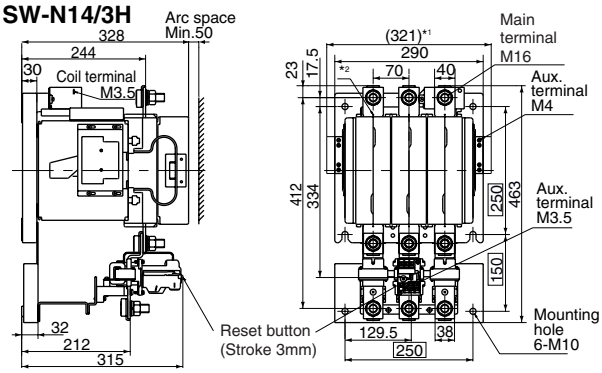

Mass: 37kg

Note: *1 For two side mounting aux. contact blocks mounted
*2 For front mounting aux. contact blocks mounted

■ Wiring diagrams

SW-N10/3H to SW-N14/3H

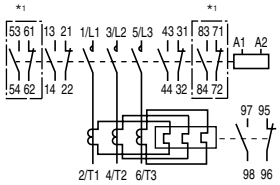

*1 In case of auxiliary contact 4NO+4NC

Downloaded from Arrow.com.

Starters/Enclosed type

AF88-1347

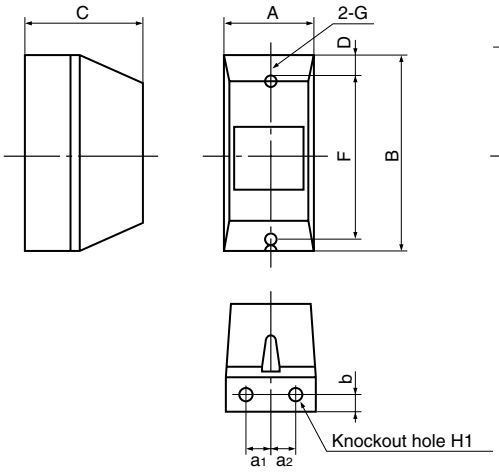

Fig. 1 Plastic enclosure

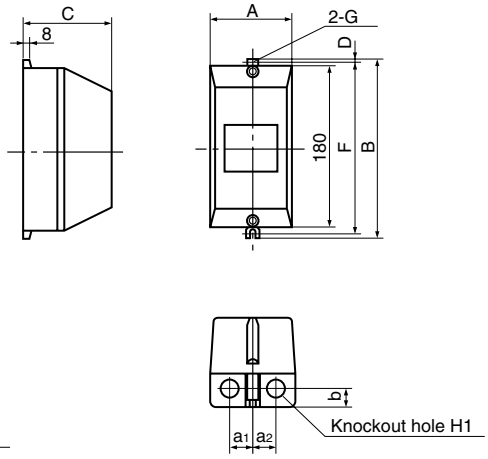

Fig. 2 Plastic enclosure

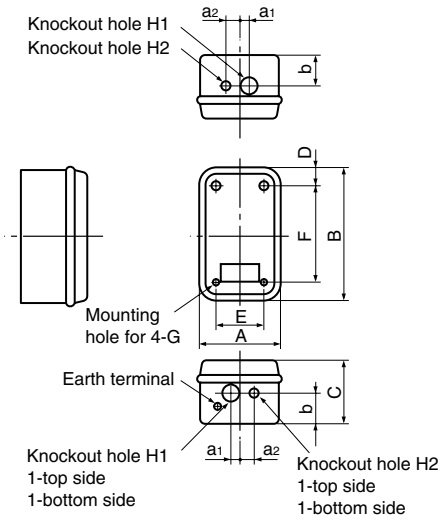

Fig. 3 Steel enclosure

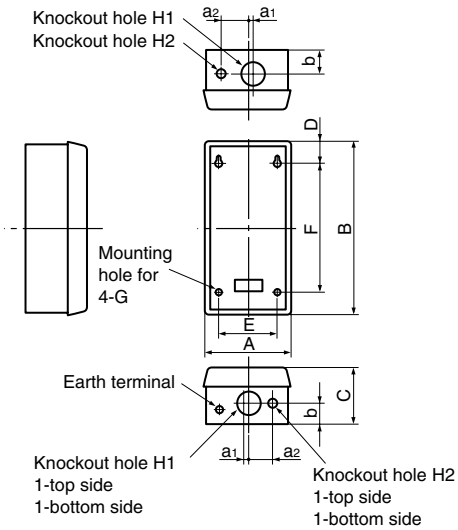

Fig. 4 Steel enclosure

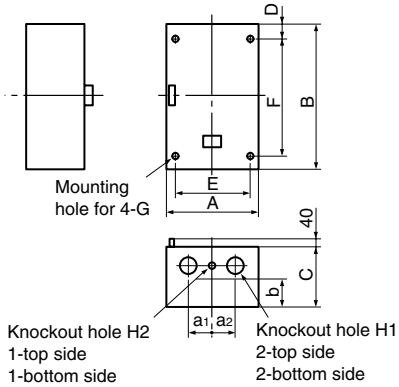

Fig. 5 Steel enclosure

Type	A	B	C	D	E	F	G	Lead hole H1	Lead hole H2	Lead hole a_1	Lead hole a_2	Lead hole b	Mass (kg)	Fig. No.
SW-03C/3H	76	165	94	14.5	–	135	M4	ϕ17	ϕ17	19	19	18.5	0.7	
SW-0C/3H	76	165	94	14.5	–	135	M4	ϕ17	ϕ17	19	19	18.5	0.7	1
SW-05C/3H	76	165	94	14.5	–	135	M4	ϕ17	ϕ17	19	19	18.5	0.72	
SW-4-0C/3H	90	200	94	5	–	190	M4	ϕ21	ϕ21	24	24	22.5	0.80	
SW-4-1C/3H	90	200	94	5	–	190	M4	ϕ21	ϕ21	24	24	22.5	0.80	2
SW-5-1C/3H	90	200	94	5	–	190	M4	ϕ21	ϕ21	24	24	22.5	0.83	
SW-N1C/3H	145	246	132	18	80	210	M6	ϕ28	ϕ28	Top:	20	60	2.0	
SW-N2C/3H	145	246	132	18	80	210	M6	ϕ28	ϕ28	Bottom:	27	60	2.0	
SW-N2SC/3H	175	320	145	35	110	250	M6	ϕ35	ϕ28	15	35	70	3	3
SW-N3C/3H	175	320	145	35	110	250	M6	ϕ35	ϕ28	15	35	70	3	
SW-N4C/3H	200	400	160	37	125	325	M8	ϕ43	ϕ28	20	40	80	4.4	
SW-N5AC/3H	200	400	160	37	125	325	M8	ϕ43	ϕ28	20	40	80	4.4	
SW-N6C/3H	225	450	180	50	150	350	M8	ϕ52	ϕ28	10	70	80	8.4	
SW-N7C/3H	280	560	210	55	175	450	M10	ϕ65	ϕ28	10	80	95	12.3	
SW-N8C/3H	335	670	225	85	200	500	M10	ϕ78	ϕ28	0	100	95	18.1	4
SW-N10C/3H	335	670	225	85	200	500	M10	ϕ78	ϕ28	0	100	95	18.8	
SW-N11C/3H	400	800	250	100	250	600	M10	ϕ105	ϕ28	0	150	100	24.6	
SW-N12C/3H	400	800	250	100	250	600	M10	ϕ105	ϕ28	0	150	100	24.6	
SW-N14C/3H	600	950	400	75	500	800	M12	ϕ105	ϕ28	150	150	280	97.0	5

Note: Dimensions of enclosed type contactor SC-03C to SC-N14C are same as those of starters. Contact FUJI for mass.

Downloaded from Arrow.com.

Reversing standard type contactors and starters

■ Description

The reversing starter consists of two magnetic contactors and a thermal overload relay. They are suitable for across-the-line starting and reversing of 3-phase squirrel-cage rotor and slip-ring motors.
This starter is provided with a built-in "perfect interlock safety mechanism" which prevents the engagement of forward-reverse contactors simultaneously, as well as electrical interlock.
Where there is a danger of forward–reverse being engaged at the same time, i.e., in the case of power source switching, hoist or machine tool controls, etc. then this type is recommended. The action is simple and positive, and free from trouble in operation.

■ Operating mechanism

When one contactor begins to move the other contactor is locked in position. An arm is used to actuate each contactor so that there is no possibility of double engagement.

KKD06-062

SC-03RM

AF00-247

SW-N6RM/3H

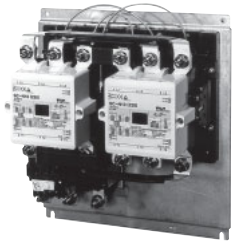

AF00-287

SW-N10RM/3H

■ Ratings of auxiliary contact and coil:

See pages 01/20 and 01/22.

■ Performance data:

Same as standard open type.
See page 01/22.

■ Ordering information

Specify the following:
1. Ordering code
2. Overload relay setting range code
3. Operating coil voltage code
4. Auxiliary contact arrangement as shown in the table below.
   Example: (2NO + 2NC) × 2

Mechanism principle (Explanation only)

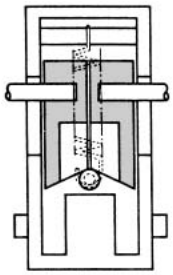

Both contactors open position

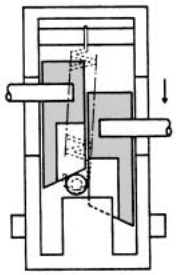

Forward contactor closed position

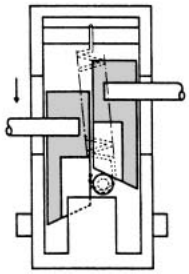

Reverse contactor closed position

■ Types and ratings

Max. motor capacity (kw) 200V 240V	Max. motor capacity (kw) 380V 440V	Rated operation current (A) 200V 240V	Rated operation current (A) 380V 440V	Auxiliary contact	Contactor Open Type	Contactor Ordering code	Starter (3-element) Open Type	Starter (3-element) Ordering code	Starter (3-element) Enclosed Type	Starter (3-element) Ordering code
2.5	4	11	9	1NC×2*1	**SC-03RM**	SC11RA-■01	**SW-03RM/3H**	SC11RAN-■01T□D	**SW-03RMC/3H**	SC11MAN-■01T□D
3.5	5.5	13	12	1NC×2*1	**SC-0RM**	SC13RA-■01	**SW-0RM/3H**	SC13RAN-■01T□D	**SW-0RMC/3H**	SC13MAN-■01T□D
3.5	5.5	13	12	(1NO+1NC)×2*2	**SC-05RM**	SC14RA-■11	**SW-05RM/3H**	SC14RAN-■11T□D	**SW-05RMC/3H**	SC14MAN-■11T□D
4.5	7.5	18	16	1NC×2*1	**SC-4-0RM**	SC18RA-■01	**SW-4-0RM/3H**	SC18RAN-■01T□D	**SW-4-0RMC/3H**	SC18MAN-■01T□D
5.5	11	22	22	1NC×2*1	**SC-4-1RM**	SC19RA-■01	**SW-4-1RM/3H**	SC19RAN-■01T□D	**SW-4-1RMC/3H**	SC19MAN-■01T□D
5.5	11	22	22	(1NO+1NC)×2*3	**SC-5-1RM**	SC20RA-■11	**SW-5-1RM/3H**	SC20RAN-■11T□D	**SW-5-1RMC/3H**	SC20MAN-■11T□D
7.5	15	32	32	(2NO+2NC)×2*3	**SC-N1RM**	SC25BRA-■22	**SW-N1RM/3H**	SC25BRAN-■22T□D	**SW-N1RMC/3H**	SC25BMAN-■22T□D
11	18.5	40	40	(2NO+2NC)×2*3	**SC-N2RM**	SC35BRA-■22	**SW-N2RM/3H**	SC35BRAN-■22T□D	**SW-N2RMC/3H**	SC35BMAN-■22T□D
15	22	50	50	(2NO+2NC)×2*3	**SC-N2SRM**	SC50BRA-■22	**SW-N2SRM/3H**	SC50BRAN-■22T□D	**SW-N2SRMC/3H**	SC50BMAN-■22T□D
18.5	30	65	65	(2NO+2NC)×2*3	**SC-N3RM**	SC65BRA-■22	**SW-N3RM/3H**	SC65BRAN-■22T□D	**SW-N3RMC/3H**	SC65BMAN-■22T□D
22	40	80	80	(2NO+2NC)×2*3	**SC-N4RM**	SC80BRA-■22	**SW-N4RM/3H**	SC80BRAN-■22T□D	**SW-N4RMC/3H**	SC80BMAN-■22T□D
30	55	105	105	(2NO+2NC)×2*3	**SC-N5ARM**	SC93CRA-■22	**SW-N5ARM/3H**	SC93CRAN-■22T□D	**SW-N5ARMC/3H**	SC93CMAN-■22T□D
37	60	125	125	(2NO+2NC)×2*3	**SC-N6RM**	SC1CBRA-■22	**SW-N6RM/3H**	SC1CBRAN-■22T□D	**SW-N6RMC/3H**	SC1CBMAN-■22T□D
45	75	150	150	(2NO+2NC)×2*3	**SC-N7RM**	SC1FBRA-■22	**SW-N7RM/3H**	SC1FBRAN-■22T□D	**SW-N7RMC/3H**	SC1FBMAN-■22T□D
55	90	180	180	(2NO+2NC)×2*3	**SC-N8RM**	SC1JBRA-■22	**SW-N8RM/3H**	SC1JBRAN-■22T□D	**SW-N8RMC/3H**	SC1JBMAN-■22T□D
65	110	220	220	(2NO+2NC)×2*3	**SC-N10RM**	SC2CBRA-■22	**SW-N10RM/3H**	SC2CBRAN-■22T□D	**SW-N10RMC/3H**	SC2CBMAN-■22T□D
90	160	300	300	(2NO+2NC)×2*3	**SC-N11RM**	SC3ABRA-■22	**SW-N11RM/3H**	SC3ABRAN-■22T□D		
120	220	400	400	(2NO+2NC)×2*3	**SC-N12RM**	SC4ABRA-■22	**SW-N12RM/3H**	SC4ABRAN-■22T□D		
180	315	600	600	(2NO+2NC)×2*3	**SC-N14RM**	SC6ABRA-■22	**SW-N14RM/3H**	SC6ABRAN-■22T□D		

Notes: 1. ■ : Coil voltage code. □ : Thermal overload relay ampere setting range code, See page 01/19.
2. *1: Auxiliary contact 1NO×2 is available on request. However, these contactors are not electrically interlocked.
Be sure to arrange electrical interlock circuit externally to avoid short-circuit accidents.
*2: Auxiliary contact 2NC×2 is available on request.
*3: Auxiliary contact (3NO+3NC)×2 is available on request for frame size N1 and above.
Auxiliary contact (4NO+4NC)×2 is available on request for frame size N1 to N3.
3. Contactor with enclosure is available on request.

Downloaded from Arrow.com.

■ Dimensions, mm
Reversing contactors/Open type

SC-03RM, SC-0RM

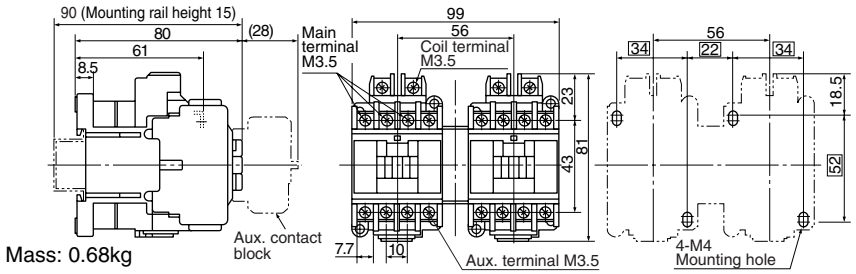

Mass: 0.68kg

SC-05RM

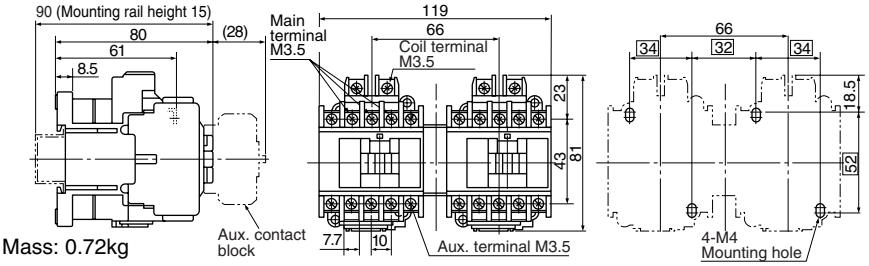

Mass: 0.72kg

SC-4-0RM, SC-4-1RM

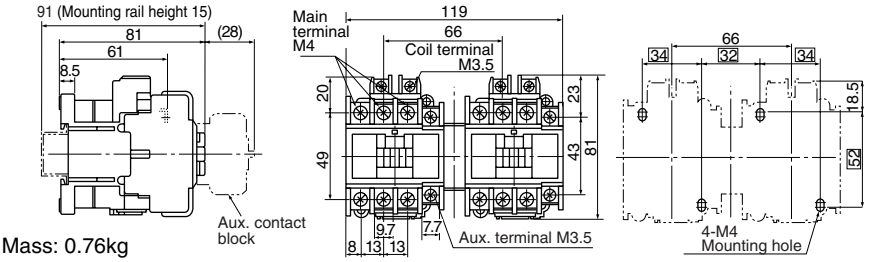

Mass: 0.76kg

SC-5-1RM

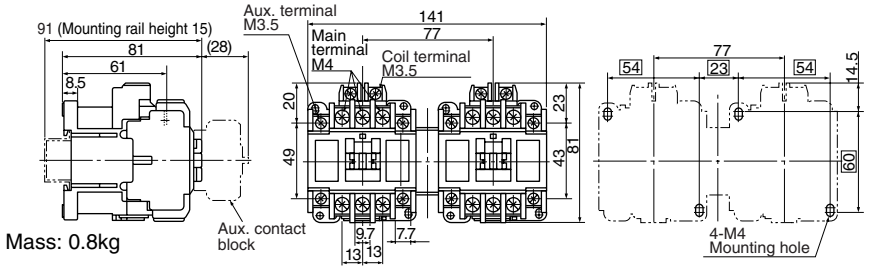

Mass: 0.8kg

SC-N1RM, SC-N2RM

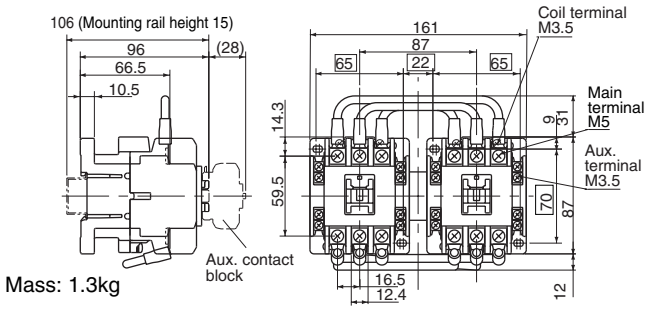

Mass: 1.3kg

■ Wiring diagrams

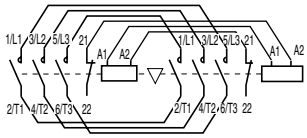

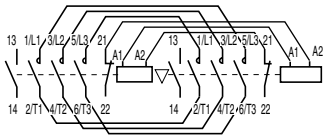

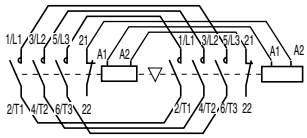

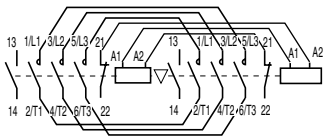

■ Wiring diagrams

SC-N1RM to SC-N3RM

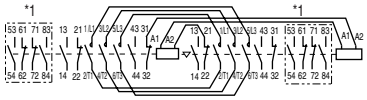

*1 In case of auxiliary contact 4NO+4NC

SC-N4RM to SC-N14RM

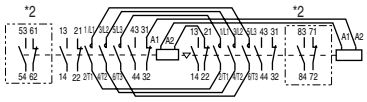

*2 In case of auxiliary contact 3NO+3NC

Downloaded from Arrow.com.

■ Dimensions, mm
Reversing contactors/Open type

SC-N2SRM, SC-N3RM

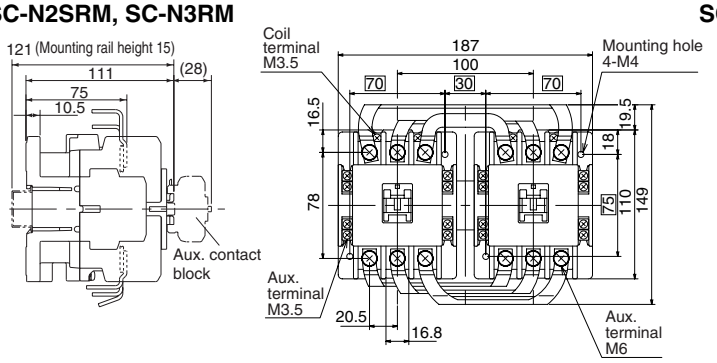

Mass: 2.3kg

SC-N7RM

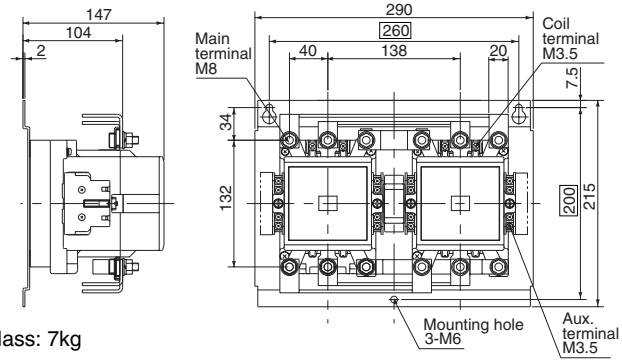

Mass: 7kg

SC-N4RM

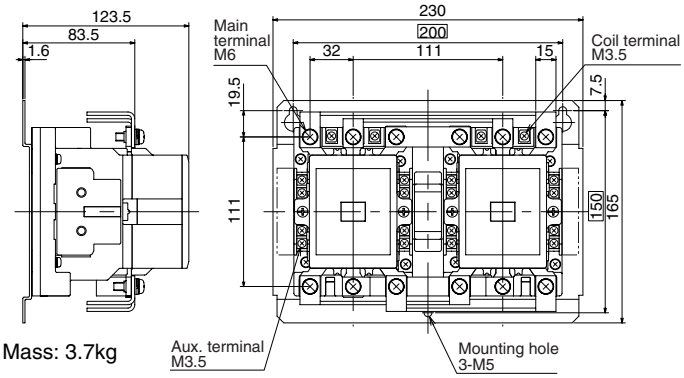

Mass: 3.7kg

SC-N8RM, SC-N10RM

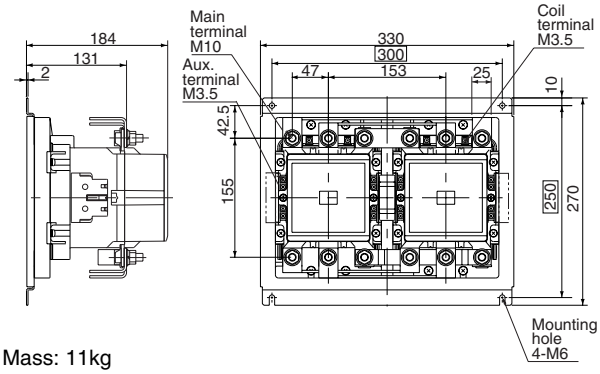

Mass: 11kg

SC-N5ARM

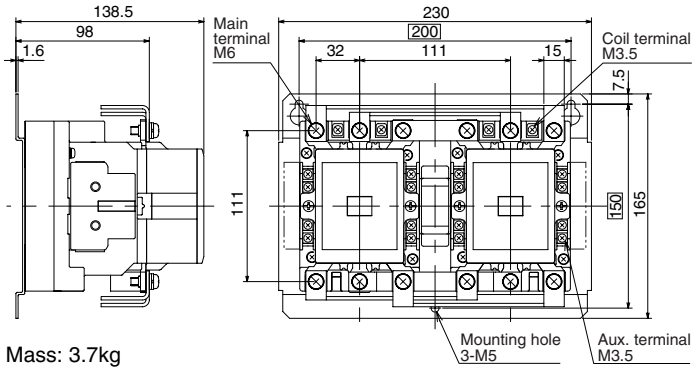

Mass: 3.7kg

SC-N11RM, SC-N12RM

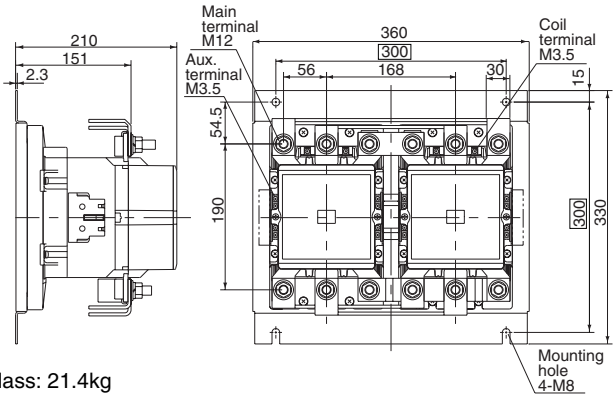

Mass: 21.4kg

SC-N6RM

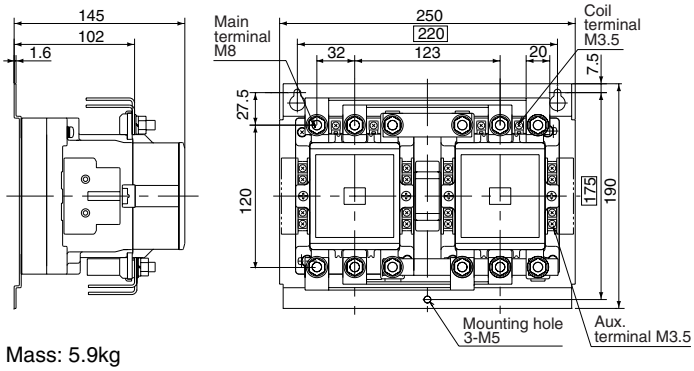

Mass: 5.9kg

SC-N14RM

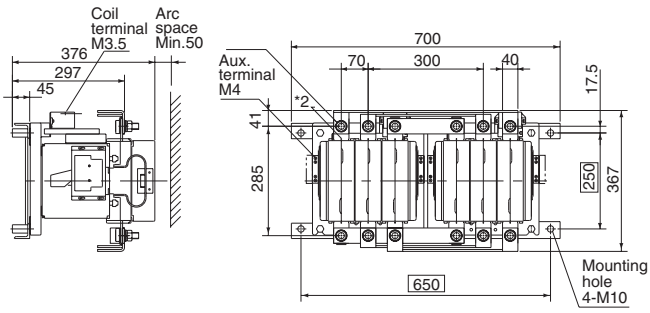

Mass: 80kg

*2 M4 tap for control circuit

Downloaded from Arrow.com.

■ Dimensions, mm
Reversing motor starters/Open type

■ Wiring diagrams

SW-03RM/3H, SW-0RM/3H

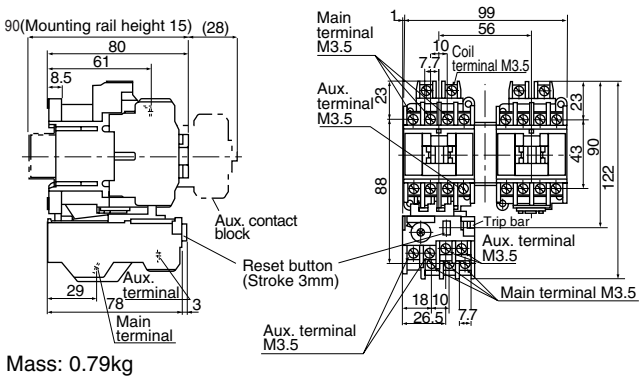

Panel drilling

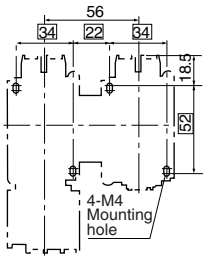

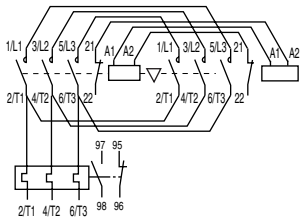

Mass: 0.79kg

SW-05RM/3H

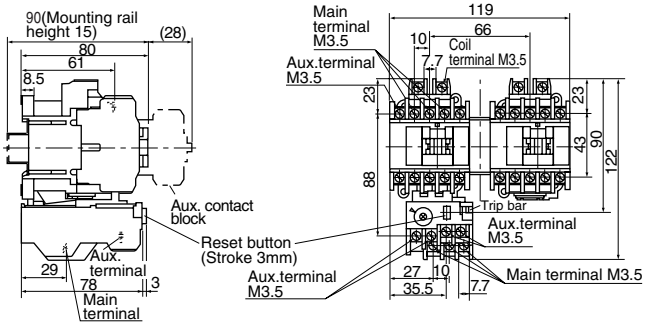

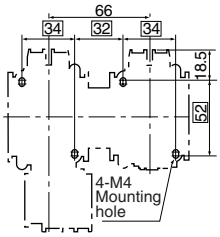

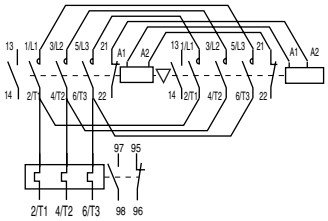

Mass: 0.83kg

SW-4-0RM/3H, SW-4-1RM/3H

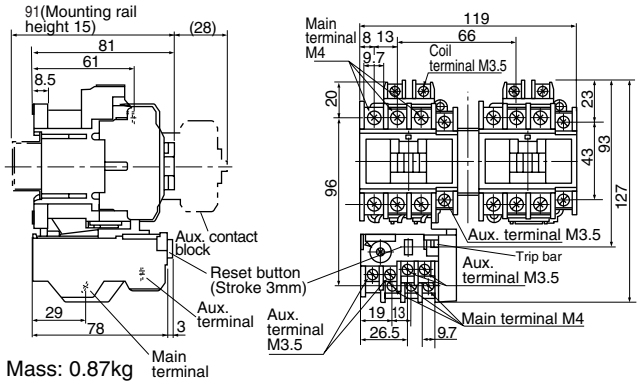

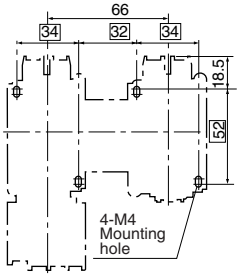

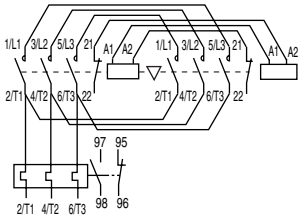

Mass: 0.87kg

SW-5-1RM/3H

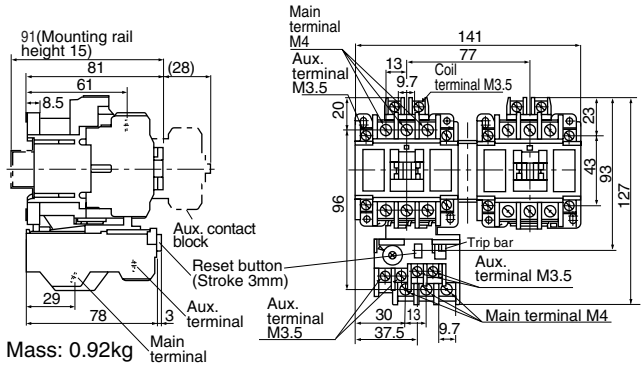

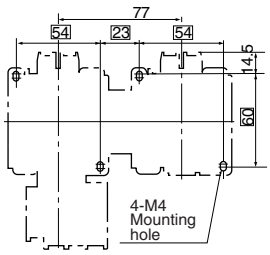

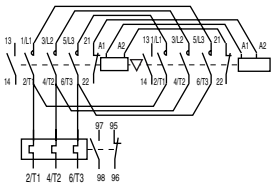

Mass: 0.92kg

Downloaded from Arrow.com.

■ Dimensions, mm
Reversing motor starters/Open type

SW-N1RM/3H, SW-N2RM/3H

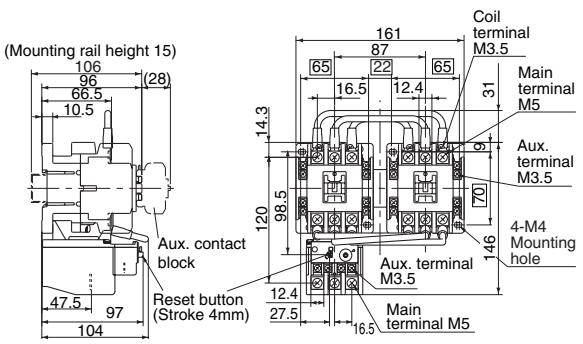

Mass: 1.5kg

SW-N6RM/3H

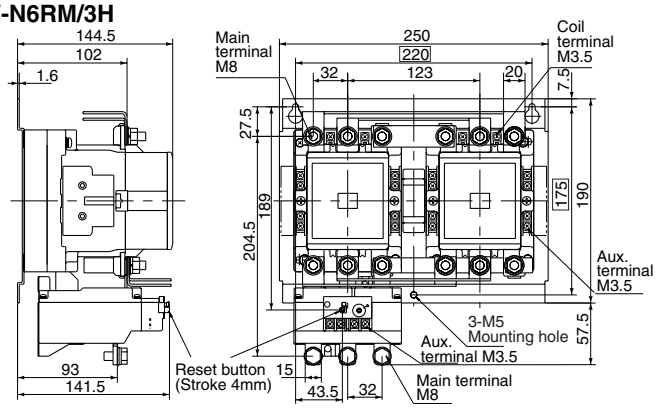

Mass: 6.5kg

SW-N2SRM/3H, SW-N3RM/3H

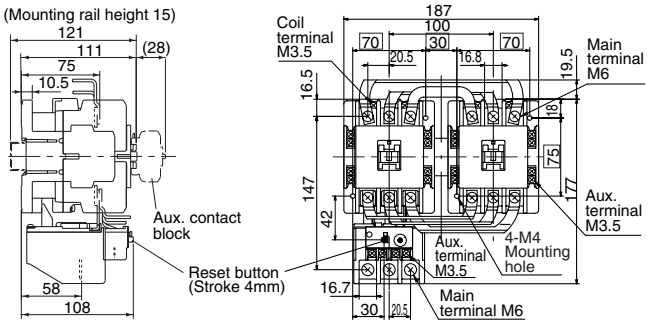

Mass: 2.6kg

SW-N7RM/3H

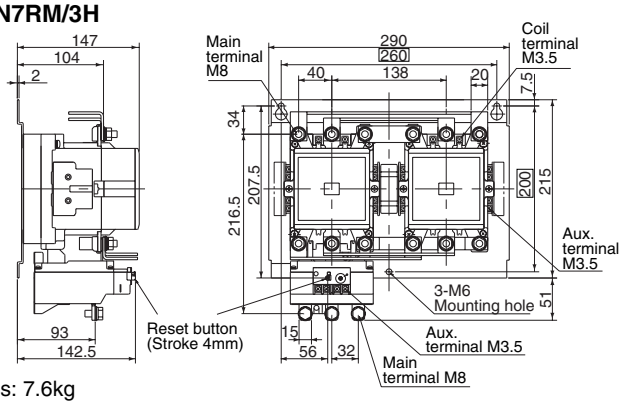

Mass: 7.6kg

SW-N4RM/3H

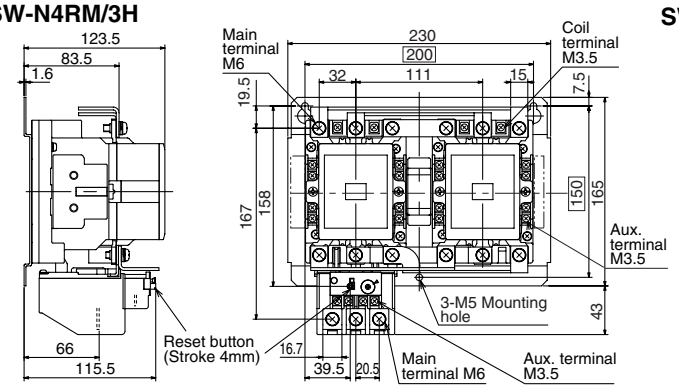

Mass: 4kg

SW-N8RM/3H

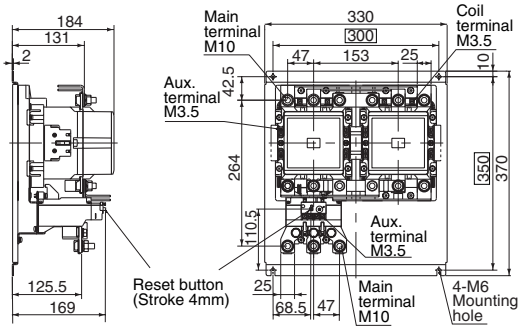

Mass: 12.2kg

SW-N5ARM/3H

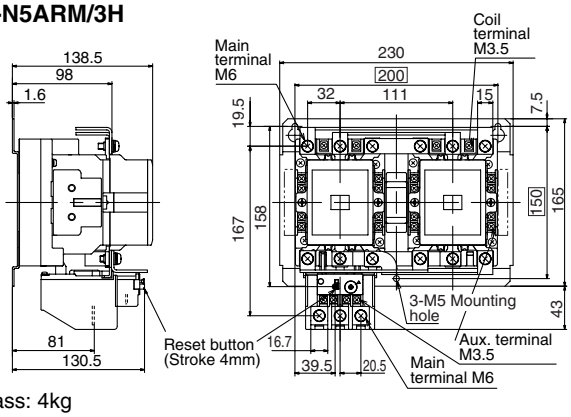

Mass: 4kg

SW-N10RM/3H

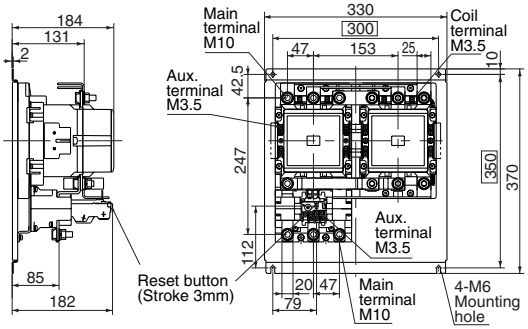

Mass: 12.9kg

Downloaded from Arrow.com.

■ Dimensions, mm
Reversing motor starters/Open type

SW-N11RM/3H, SW-N12RM/3H

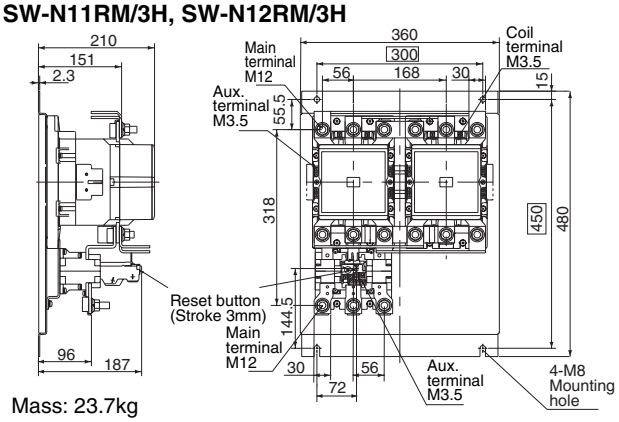

Mass: 23.7kg

SW-N14RM/3H

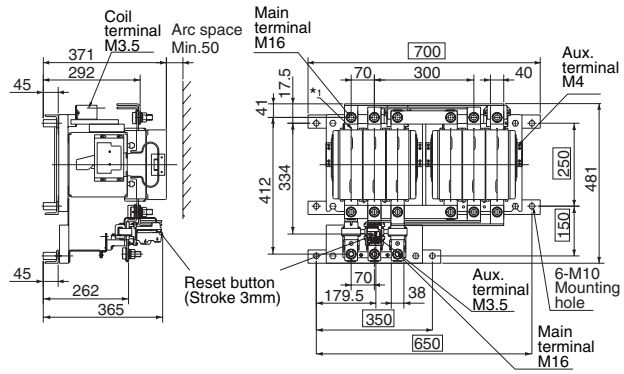

Mass: 85kg

*1 M4 tap for control circuit

■ Wiring diagrams
SW-N1RM/3H to SW-N8RM/3H

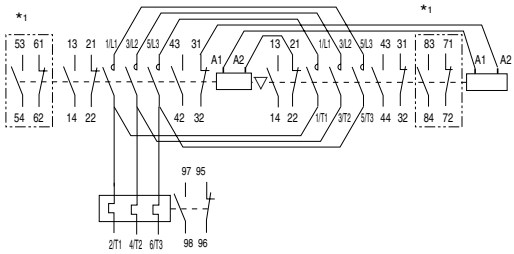

*1 In case of auxiliary contact 3NO+3NC

SW-N10RM/3H to SW-N12RM/3H

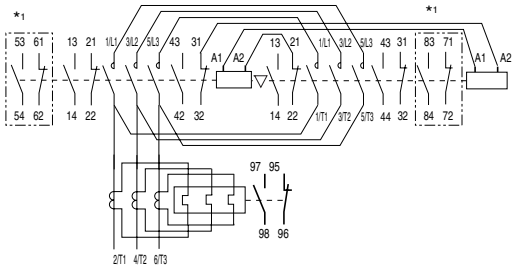

*1 In case of auxiliary contact 3NO+3NC

SW-N14RM/3H

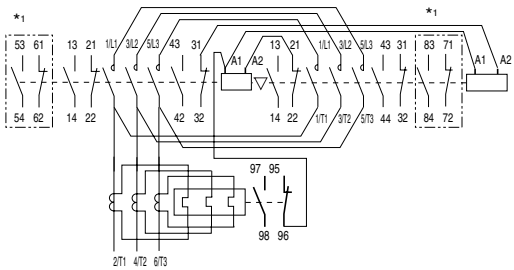

*1 In case of auxiliary contact 3NO+3NC

Downloaded from Arrow.com.

■ Dimensions, mm
Reversing motor starters/Enclosed type

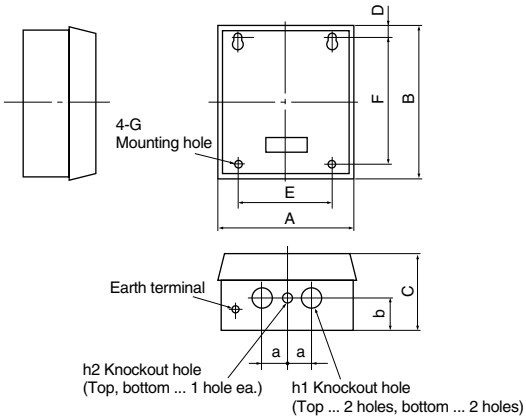

Type	A	B	C	D	E	F	G	h1	h2	a	b	Mass (kg) 3-element
SW-03RMC/3H	192	192	100	16	130	160	4-M6	φ22	–	65	65	1.9
SW-0RMC/3H	192	192	100	16	130	160	4-M6	φ22	–	65	65	1.9
SW-05RMC/3H	192	192	100	16	130	160	4-M6	φ22	–	65	65	1.9
SW-4-0RMC/3H	192	192	100	16	130	160	4-M6	φ22	–	65	65	1.95
SW-4-1RMC/3H	192	192	100	16	130	160	4-M6	φ22	–	65	65	1.95
SW-5-1RMC/3H	192	192	100	16	130	160	4-M6	φ22	–	65	65	2.0
SW-N1RMC/3H	254	250	131	20	185	210	4-M6	φ28	–	80	70	3.8
SW-N2RMC/3H	254	250	131	20	185	210	4-M6	φ28	–	80	70	3.8
SW-N2SRMC/3H	280	320	145	35	200	250	4-M6	φ35	φ28	55	70	6.6
SW-N3RMC/3H	280	320	145	35	200	250	4-M6	φ35	φ28	55	70	6.6
SW-N4RMC/3H	355	400	160	37.5	250	325	4-M8	φ43	φ28	65	80	10.7
SW-N5ARMC/3H	355	400	160	37.5	250	325	4-M8	φ43	φ28	65	80	11.4
SW-N6RMC/3H	400	450	180	50	300	350	4-M8	φ52	φ28	85	80	14.3
SW-N7RMC/3H	450	560	210	55	350	450	4-M10	φ65	φ28	90	95	21.5
SW-N8RMC/3H	500	670	225	85	400	500	4-M10	φ78	φ28	90	105	29.4
SW-N10RMC/3H	500	670	225	85	400	500	4-M10	φ78	φ28	90	105	32.4

Notes: • SW-5-1RMC/3H with aux. contact 2×2NO·2NC is not availale.
• Dimensions of enclosed type contactor SC-03RMC to SC-N10RMC/3H are same as those of starters. Contact FUJI for mass.

Downloaded from Arrow.com.

DC operated contactors and starters

Up to 37kW 440 Volts

■ Description

In most cases general purpose AC magnetic motor starters employ AC coils, and although "AC motor with AC controls" is the normal practice, in complicated controls troubles can be expected due to the instantaneous voltage drop or power failure in the AC power source. Thus, in some applications "AC motor with DC control" offers a better system.
FUJI manufactures two types of DC operated contactors. In one type the ON/OFF operation is carried out by a DC operating coil. The other type is operated by the SUPER MAGNET. The SC-03/G to N3/G types use the single coil system. They can be operated at full voltage. When requiring the DC operation for SC-N1 to N4 contactor, the contactor with SUPER MAGNET is substituted(SC-N1/SE to N4/SE).
AC/DC operated types with SUPER MAGNET
• SC-N1/SE to N4/SE, SW-N1/SE to N4/SE
• SC-N5 to N16, SW-N5/3H to 14/3H
These standard types employ the SUPER MAGNET.

■ Ordering information

Specify the following:
1. Ordering code
2. Operating coil voltage code
3. Contact arrangement:
   In the case of the frame size 0/G to 5-1/G, specify the contact arrangement.
4. Overload relay setting range code.

KKD05-286

SW-5-1/G3H

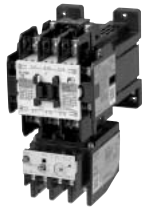

KKD05-289

SW-N2/G3H

KKD06-026

SC-N1/SE

■ Coil ratings

Type	Coil voltage (V DC)	Power consumption Inrush (W)	Power consumption Sealed (W)	Operating characteristic Pick-up voltage (V)	Operating characteristic Drop-out voltage (V)
SC-03/G	12, 24, 48, 60,	7	7	10–15	3–7
SC-0/G	100, 110, 120	7	7	10–15	3–7
SC-05/G	200, 210, 220	7	7	10–15	3–7
SC-4-0/G		7	7	11–16	3–7
SC-4-1/G		7	7	11–16	3–7
SC-5-1/G		7	7	11–16	3–8
SC-N1/G		9	9	9–15	3–9
SC-N2/G		9	9	9–15	3–9
SC-N2S/G		12	12	9–15	3–8
SC-N3/G		12	12	9–15	3–8
SC-N4/G		20	20	10–15	3–8
SC-N5/G		20	20	10–15	3–8
SC-N1/SE	24, 48	145	2.4	16–19	4–12
SC-N2/SE	100–120 *1	145	2.4	16–19	4–12
SC-N2S/SE	200–240 *2	175	2.0	16–19	4–12
SC-N3/SE		175	2.0	16–19	4–12
SC-N4/SE		100	2.8	16–19	4–12
SC-N5		100	2.8	16–19	4–12

Notes: Operating coil voltage 24V DC for 03/G to N5/G
24V DC for N1/SE to N4/SE, N5
*1 The coil voltage from a DC power supply with single phase full-wave rectification will be 100 to 110 V.
*2 The coil voltage from a DC power supply with single phase full-wave rectification will be 200 to 220 V.

■ UL, CSA, TÜV and CCC approved:

See page 01/116, 123, 127.

■ Auxiliary contact

Same as standard type, *See page 01/20.*

■ Ratings

Max. motor capacity (kW) 200V 240V	Max. motor capacity (kW) 380V 440V	Operational current (A) 200V 240V	Operational current (A) 380V 440V	Thermal current (A)	Auxiliary contact NO	Auxiliary contact NC	Contactor Type	Contactor Ordering code	Starter (3-element) Type	Starter (3-element) Ordering code
2.5	4	11	9	20	1	–*1	**SC-03/G**	**SC11AG-■10**	**SW-03/G3H**	**SC11AGN-■10T□D**
3.5	5.5	13	12	20	1	–*1	**SC-0/G**	**SC13AG-■10**	**SW-0/G3H**	**SC13AGN-■10T□D**
3.5	5.5	13	12	20	1	1*2	**SC-05/G**	**SC14AG-■11**	**SW-05/G3H**	**SC14AGN-■11T□D**
4.5	7.5	18	16	25	1	–*1	**SC-4-0/G**	**SC18AG-■10**	**SW-4-0/G3H**	**SC18AGN-■10T□D**
5.5	11	22	22	32	1	–*1	**SC-4-1/G**	**SC19AG-■10**	**SW-4-1/G3H**	**SC19AGN-■10T□D**
5.5	11	22	22	32	1	1*3	**SC-5-1/G**	**SC20AG-■11**	**SW-5-1/G3H**	**SC20AGN-■11T□D**
7.5	15	32	32	50	2	2	**SC-N1/G**	**SC25BAG-■22**	**SW-N1/G3H**	**SC25BAGN-■22T□D**
11	18.5	40	40	60	2	2	**SC-N2/G**	**SC35BAG-■22**	**SW-N2/G3H**	**SC35BAGN-■22T□D**
15	22	50	50	80	2	2	**SC-N2S/G**	**SC50BAG-■22**	**SW-N2S/G3H**	**SC50BAGN-■22T□D**
18.5	30	65	65	100	2	2	**SC-N3/G**	**SC65BAG-■22**	**SW-N3/G3H**	**SC65BAGN-■22T□D**
22	40	80	80	135	2	2	**SC-N4/G**	**SC80BAG-■22**	**SW-N4/G3H**	**SC80BAGN-■22T□D**
30	55	105	105	150	2	2	**SC-N5/G**	**SC93BAG-■22**	**SW-N5/G3H**	**SC93BAGN-■22T□D**
7.5	15	32	32	50	2	2	**SC-N1/SE**	**SC25BAS-■22**	**SW-N1/SE3H**	**SC25BASN-■22T□D**
11	18.5	40	40	60	2	2	**SC-N2/SE**	**SC35BAS-■22**	**SW-N2/SE3H**	**SC35BASN-■22T□D**
15	22	50	50	80	2	2	**SC-N2S/SE**	**SC50BAS-■22**	**SW-N2S/SE3H**	**SC50BASN-■22T□D**
18.5	30	65	65	100	2	2	**SC-N3/SE**	**SC65BAS-■22**	**SW-N3/SE3H**	**SC65BASN-■22T□D**
22	40	80	80	135	2	2	**SC-N4/SE**	**SC80BAS-■22**	**SW-N4/SE3H**	**SC80BASN-■22T□D**
30	55	105	105	150	2	2	**SC-N5**	**SC90BAA-■22**	**SW-N5/3H**	**SC90BAAN-■22T□D**

Notes: 1. ■ : Coil voltage code, □ : Thermal overload relay ampere setting range code, see page 01/19
2. *1 Auxiliary contact 1NC is available. *2 Auxiliary contact 2NO or 2NC is available. *3 Auxiliary contact 2NO, 2NC, or 2NO+2NC is available. For enclosed type, 2NO+2NC is not available
3. Auxiliary contact 4NO+4NC is available on request for frame size N1 and above.

Downloaded from Arrow.com.

■ Dimensions

DC operated contactors

SC-03/G, SC-0/G

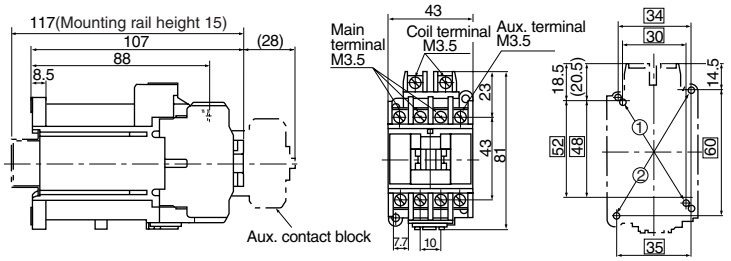

Mass:0.55kg

SC-05/G

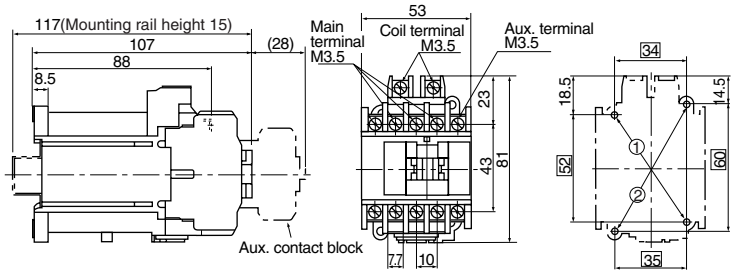

Mass:0.58kg

SC-4-0/G, SC-4-1/G

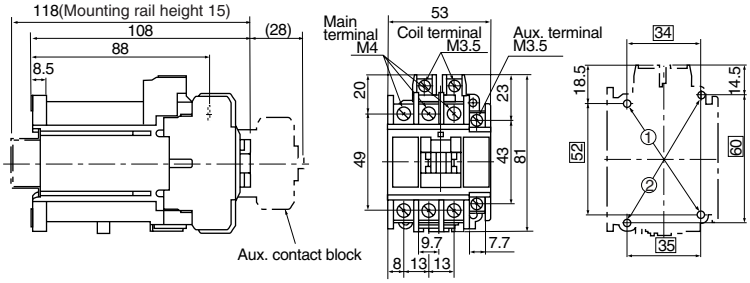

Mass:0.6kg

SC-5-1/G

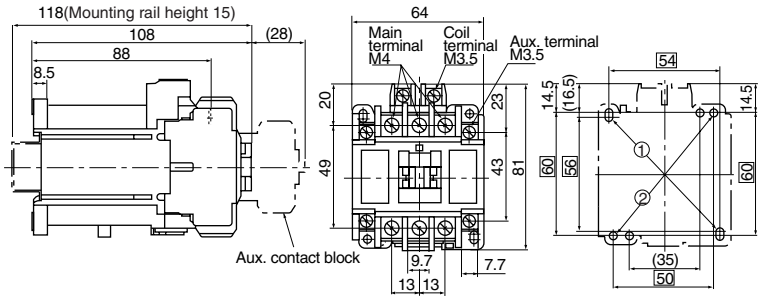

Mass:0.62kg

■ Wiring diagrams

Auxiliary contact

1NO

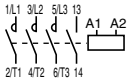

1NC

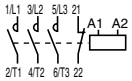

2NO

1NO+1NC

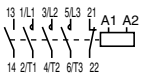

2NC

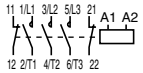

1NO

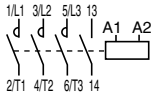

1NC

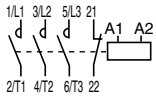

2NO

1NO+1NC

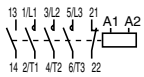

2NC

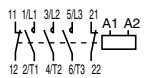

Note: Use the two mounting holes on a diagonal line to mount a contactor.
Mounting holes indicated by ① are compatible with those of SRC type.
Mounting holes indicated by ② are compatible with IEC standard

Downloaded from Arrow.com.

■ Dimensions

DC operated contactors

SC-N1/G, SC-N2/G

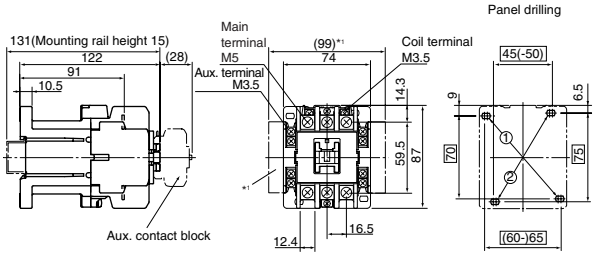

*1 For two side mounting aux. contact blocks mounted

Mass: 0.82kg

SC-N2S/G, SC-N3/G

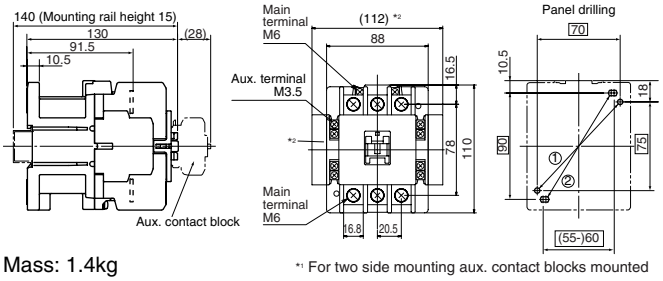

*1 For two side mounting aux. contact blocks mounted

Mass: 1.4kg

SC-N4/G, SC-N5/G

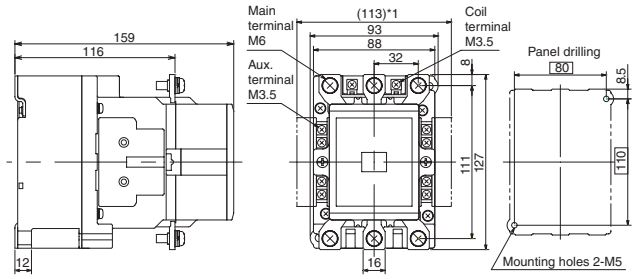

*1 For two side mounting aux. contact blocks mounted

Mass: 2.3kg

■ Wiring diagrams

SC-N1/G to SC-N5/G

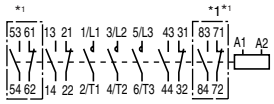

*1 In case of auxiliary contact 4NO+4NC

DC operated starters

SW-03/G3H, SW-0/G3H

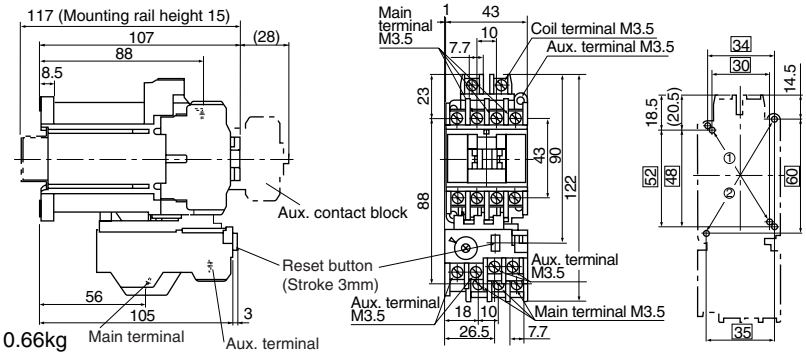

Mass: 0.66kg

SW-05/G3H

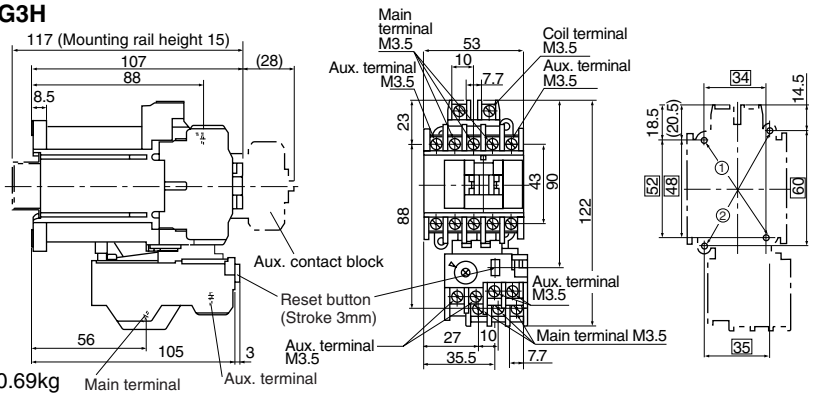

Mass: 0.69kg

■ Wiring diagrams

Auxiliary contact

1NO

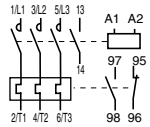

1NC

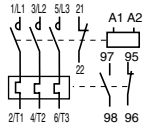

2NO

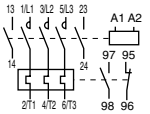

1NO+1NC

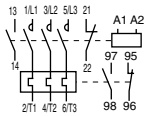

2NC

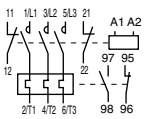

Note: Use the two mounting holes on a diagonal line to mount a contactor.
Mounting holes indicated by ① are compatible with those of SRC type.
Mounting holes indicated by ② are compatible with IEC standard

Downloaded from Arrow.com.

■ Dimensions
DC operated starters

SW-4-0/G3H, SW-4-1/G3H

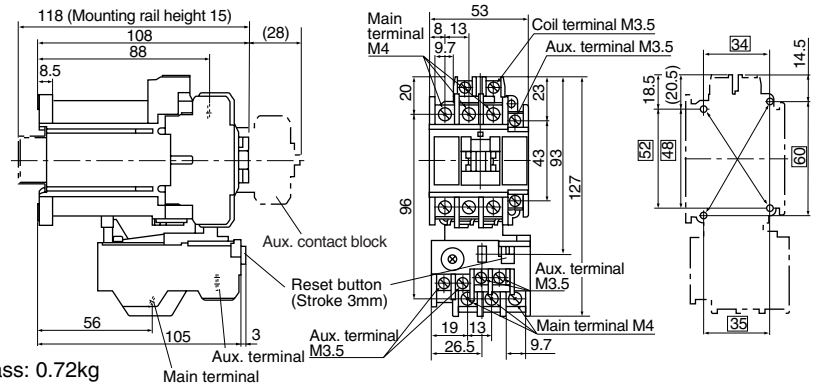

Mass: 0.72kg

SW-5-1/G3H

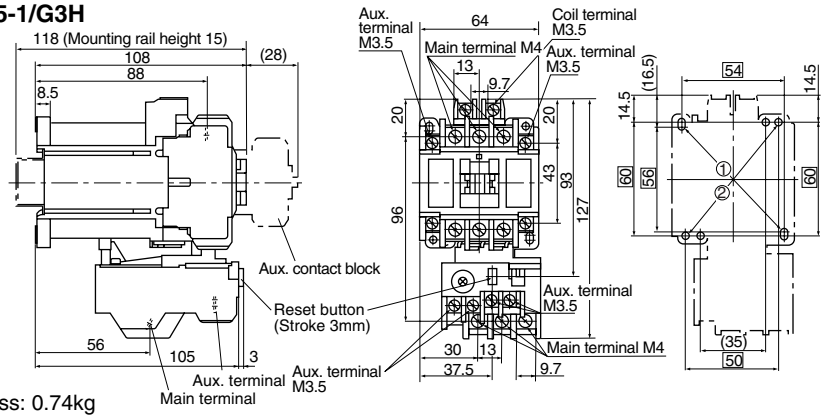

Mass: 0.74kg

■ Wiring diagrams

Auxiliary contact

1NO

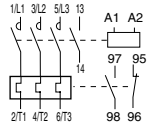

1NC

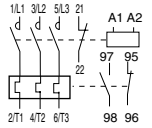

2NO

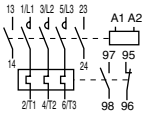

1NO+1NC

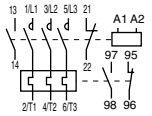

2NC

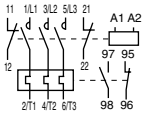

SW-N1/G3H, SW-N2/G3H

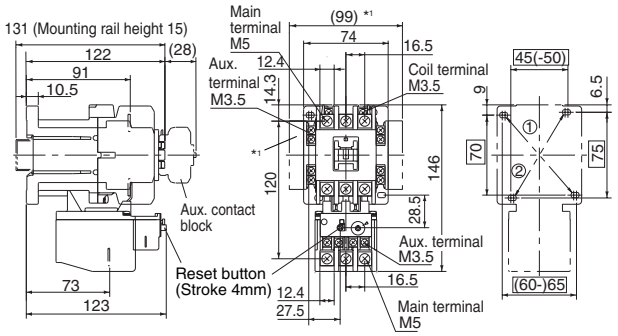

Mass: 1kg

SW-N4/G3H, SW-N5/G3H

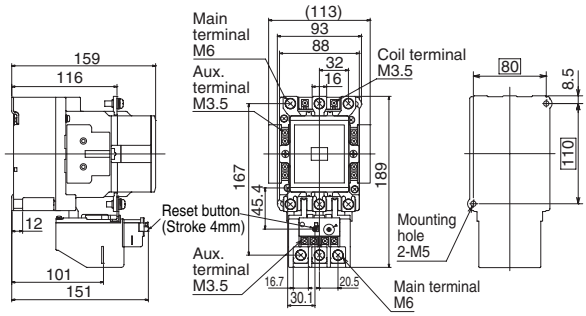

Mass: 2.6kg

SW-N2S/G3H, SW-N3/G3H

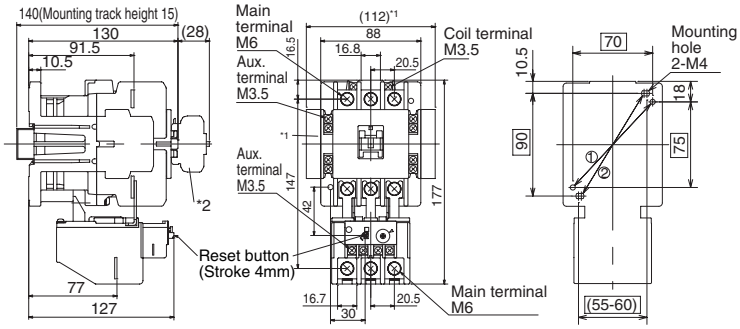

Mass: 1.6kg

■ Wiring diagrams
SW-N1/G3H to SW-N5/G3H

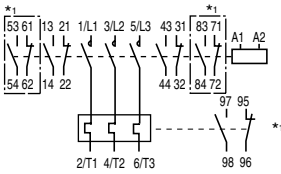

*1 In case of auxiliary contact 4NO+4NC

Note: • Use the two mounting holes on a diagonal line to mount a contactor.
Mounting holes indicated by ① are compatible with those of SRC type.
Mounting holes indicated by ② are compatible with IEC standard
*1 For two side mounting aux. contact blocks mounted
*2 For front mounting aux. contact blocks mounted

Downloaded from Arrow.com.

■ Dimensions

DC operated contactors

SC-N1/SE, SC-N2/SE

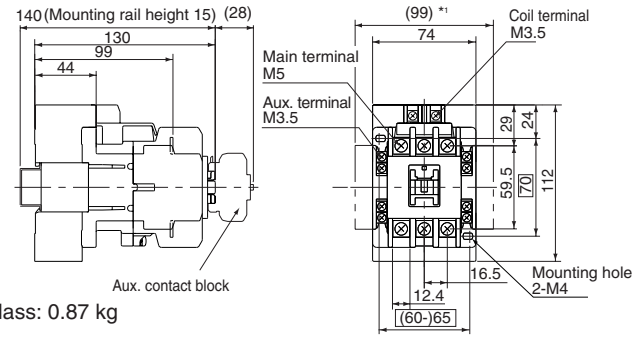

Mass: 0.87 kg

SC-N4/SE, SC-N5

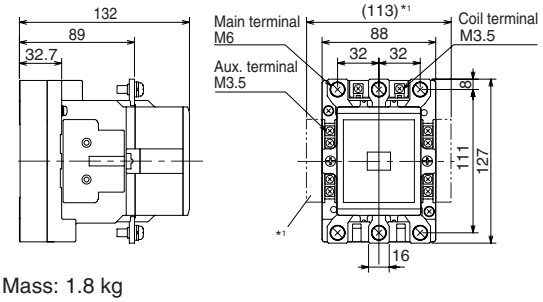

Mass: 1.8 kg

SC-N2S/SE, SC-N3/SE

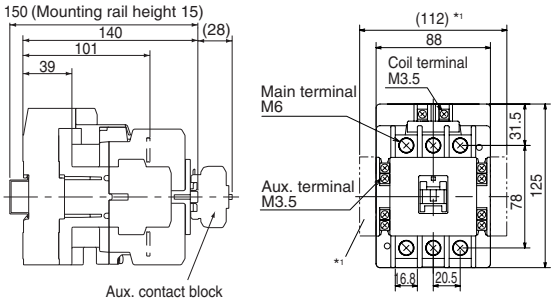

Mass: 1.3 kg

■ Wiring diagrams

SC-N1/SE to SC-N4/SE

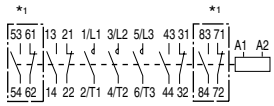

*1 In case of auxiliary contact 4NO+4NC

Dimension for SC-N5 to SC-N16 types

Same as standard open type

See page 01/27, 01/28

DC operated starters

SW-N1/SE3H, SW-N2/SE3H

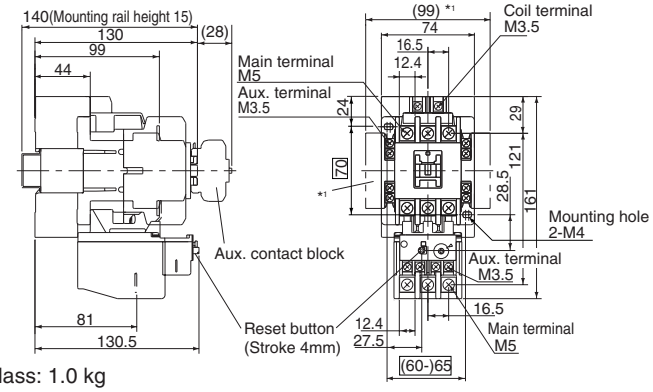

Mass: 1.0 kg

SW-N4/SE3H, SW-N5/3H

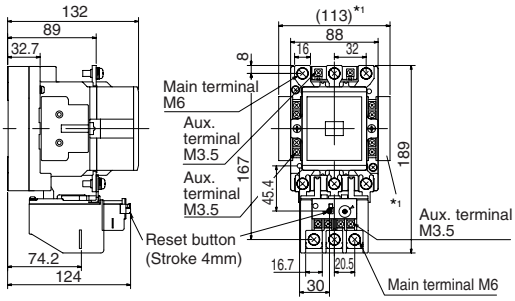

*1 In case of auxiliary contact 4NO+4NC

Mass: 2.1 kg

SW-N2S/SE3H, SW-N3/SE3H

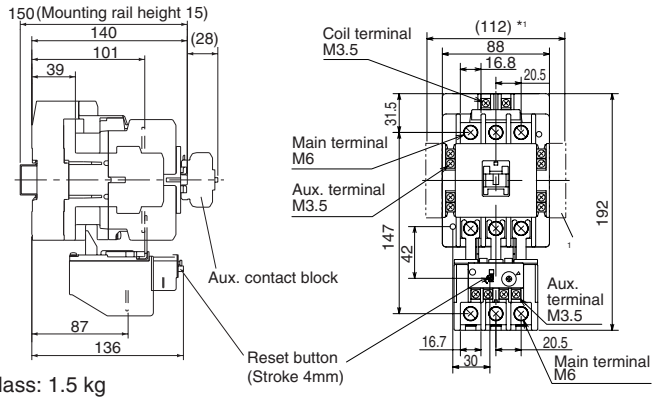

Mass: 1.5 kg

■ Wiring diagrams

SW-N1/SE3H to SW-N5/3H

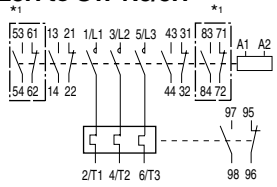

*1 In case of auxiliary contact 4NO+4NC

Dimension for SW-N6/3H to SW-N14/3H types

Same as standard open type

See page 01/31, 01/32

Note: *1 For two side mounting aux. contact blocks mounted

Downloaded from Arrow.com.

OFF-delay release type

■ Description

This type contactor consists of DC-operated contactor and off-delay release unit, and the contacts are released with a delay of 1-4 or 1-5 seconds after the coil has been de-energized.
When the standard type contactor suffers an instantaneous voltage drop in the AC power supply or a power failure takes place the operating coils are de-energized and the reclosing of the contacts must be carried out every time. The off-delay release contactor is so designed that in the event of a brief power outage the coil will not release the contacts and the power is maintained making reclosing action unnecessary.

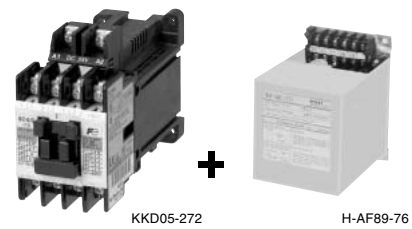

SC-0/G **SZ-DE200**

■ Combination of OFF-delay release units and contactors

Contactor Type	Ordering code	Starter (3-element) Type	Ordering code	OFF-delay release unit Type	Ordering code
SC-03/G	SC11AG-■10	SW-03/G3H	SC11AGN-■10T□D	**SZ-DE□**	SZ1DE□
SC-0/G	SC13AG-■10	SW-0/G3H	SC13AGN-■10T□D		
SC-05/G	SC14AG-■11	SW-05/G3H	SC14AGN-■11T□D		
SC-4-0/G	SC18AG-■10	SW-4-0/G3H	SC18AGN-■10T□D		
SC-4-1/G	SC19AG-■10	SW-4-1/G3H	SC19AGN-■10T□D		
SC-5-1/G	SC20AG-■11	SW-5-1/G3H	SC20AGN-■11T□D		
SC-N1/G	SC25BAG-■22	SW-N1/G3H	SC25BAGN-■22T□D	**SZ-N1/GDE**	SZ2N1GDE-□
SC-N2/G	SC35BAG-■22	SW-N2/G3H	SC35BAGN-■22T□D	**SZ-N1/GDE**	SZ2N1GDE-□
SC-N2S/G	SC50BAG-■22	SW-N2S/G3H	SC50BAGN-■22T□D	**SZ-N2S/GDE**	SZ2N2SGDE-□
SC-N3/G	SC65BAG-■22	SW-N3/G3H	SC65BAGN-■22T□D	**SZ-N2S/GDE**	SZ2N2SGDE-□
SC-N4/SE	SC80BAS-■22	SW-N4/SE3H	SC80BASN-■22T□D	**SZ-N5/DE**	SZ2N5DE-□
SC-N5	SC93BAA-■22	SW-N5/3H	SC93BAAN-■22T□D	**SZ-N5/DE**	SZ2N5DE-□
SC-N6	SC1CBAA-■22	SW-N6/3H	SC1CBAAN-■22T□D	**SZ-N6/DE**	SZ2N6DE-□
SC-N7	SC1FBAA-■22	SW-N7/3H	SC1FBAAN-■22T□D	**SZ-N6/DE**	SZ2N6DE-□
SC-N8	SC1JBAA-■22	SW-N8/3H	SC1JBAAN-■22T□D	**SZ-N8/DE**	SZ2N8DE-□
SC-N10	SC2CBAA-■22	SW-N10/3H	SC2CBAAN-■22T□D	**SZ-N8/DE**	SZ2N8DE-□
SC-N11	SC3ABAA-■22	SW-N11/3H	SC3ABAAN-■22T□D	**SZ-N11/DE**	SZ2N11DE-□
SC-N12	SC4ABAA-■22	SW-N12/3H	SC4ABAAN-■22T□D	**SZ-N11/DE**	SZ2N11DE-□
SC-N14	SC6ABAA-■22	SW-N14/3H	SC6ABAAN-■22T□D	**SZ-N14/DE**	SZ2N14DE-□

Notes: 1. For contactor and starter.
Enter the coil voltage code in the ■ mark.
Enter the thermal overload relay ampere setting range code in the □ mark.
2. For off-delay release unit.
Enter the control voltage code in the □ mark.

● OFF-delay release unit ordering code

SZ 2N1 ■DE – □

Basic type — SZ
Frame size — 2N1
OFF-delay release unit — ■DE
■ 2N1 to 2N2S: G
2N5 to 2N14: Blank

Control voltage
For SZ-DE
100: 100V AC, 50/60Hz
110: 110V AC, 50/60Hz
200: 200V AC, 50/60Hz
220: 220V AC, 50/60Hz
For SZ-N1/GDE to N14/DE
1: 100-110V AC, 50/60Hz
2: 200-220V AC, 50/60Hz

Note: If OFF-delay release contactors (starters) having capacities of frame size 03 to N3 are required the DC operated contactors (starters) will be combined with the OFF-delay release unit.
When ordering make sure that the input voltage (AC) of the OFF-delay release unit is equal to the operating voltage (DC) of the contactors (starters).

Example:
SZ-N5/DE 100V AC 50Hz+SC-N5 100V DC
(OFF-delay release unit) + (Contactor)

■ Performance data

Frame	Hold time	Making/breaking capacity	Operating cycles per hour	Life expectancy (operations) Electrical	Mechanical
03/G to 5-1/G	1–5 sec.	10×Ie / 8×Ie	600	2 million*1	10 million
N1/G, N2/G	1–5 sec.	10×Ie / 8×Ie	600	2 million	10 million
N2S/G, N3/G	1–5 sec.	10×Ie / 8×Ie	600	2 million	5 million
N4/SE	1–4 sec.	10×Ie / 8×Ie	600	1 million	5 million
N5 to N11	1–4 sec.	10×Ie / 8×Ie	600	1 million	5 million
N12	1–4 sec.	10×Ie / 8×Ie	600	500,000	5 million
N14	1–4 sec.	10×Ie / 8×Ie	600	500,000	5 million

Ie: Rated operational current
Capacitor life: 100,000 operations
*1 Frame size 4–0: 1.5 million
Conforming to Class AC-3, IEC 60947-4-1

OFF-delay release unit

■ Wiring diagrams

SZ-DE100, 110, 200, 220
SZ-N1/GDE, N2S/GDE

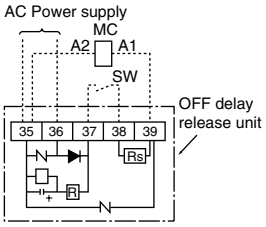

SZ-N5/DE to N14/DE

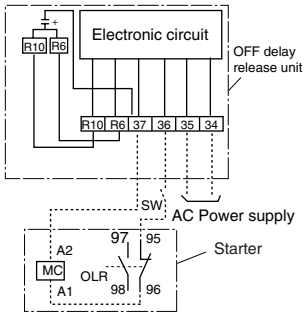

■ Dimensions, mm

SZ-DE100, 110, 200, 220
SZ-N1/GDE, N2S/GDE

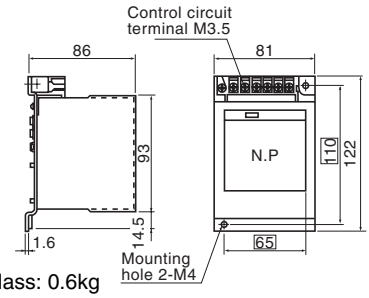

Mass: 0.6kg

SZ-N5/DE to N14/DE

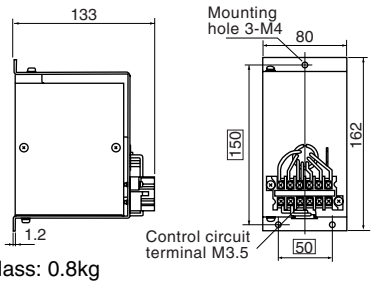

Mass: 0.8kg

Downloaded from Arrow.com.

Contactors and starters with extra pick-up operating coil

■ Description

Generally, if the operating coil voltage of the contactor is within 85%–110% of its rated value normal operation can be expected. However, should the power source have a low capacity or if the supply point is some distance away from the power source a voltage drop can be expected and voltage may fall below 85% of its rated value under motor starting or similar conditions. Direct-on-line starting under these circumstances may result in poor starter performance, contacts welding together and coils overheating. The FUJI U-type contactors are provided with an extra operating coil which performs correctly even if the voltage is only 75% of its rated value. This starter is recommended for use in locations where reduced voltage conditions are met.

Standard types for frame sizes N5 and above can be used as the contactor or starter with extra pick-up operating coil. Enclosed type starters (03 to N4) are also available.

■ **Ratings:** *See page 01/20.*
■ **Coil voltage:** *See page 01/22.*
■ **Dimensions:**
Same as standard type.
See page 01/26, 01/27.
■ **Thermal overload relay:**
See page 01/88.

AF88-820

SC-0/U

■ Ordering information

Specify the following:
1. Ordering code
2. Motor ratings: Voltage, frequency, capacity (kW) and full load current.
3. Operating coil voltage code

■ Coil characteristics

Contactor Type	Ordering code	Starter (3-element) Type	Ordering code	Aux. contact NO	NC	Power consumption Inrush (VA)	Sealed (VA)	Pick-up voltage (V) 200V 50Hz	220V 60Hz	Drop-out voltage (V) 200V 50Hz	220V 60Hz
SC-03/U	SC11AU-■10	**SW-03/U3H**	SC11AUN-■10T□D	1	– *1	120	15	93–115	102–124	58–88	66–96
SC-0/U	SC13AU-■10	**SW-0/U3H**	SC13AUN-■10T□D	1	– *1	120	15	93–115	102–124	58–88	66–96
SC-05/U	SC14AU-■11	**SW-05/U3H**	SC14AUN-■11T□D	1	1 *2	120	15	93–116	103–126	60–90	70–99
SC-4-0/U	SC18AU-■10	**SW-4-0/U3H**	SC18AUN-■10T□D	1	– *1	120	15	100–120	110–130	63–90	73–100
SC-4-1/U	SC19AU-■10	**SW-4-1/U3H**	SC19AUN-■10T□D	1	– *1	120	15	100–120	110–130	63–90	73–100
SC-5-1/U	SC20AU-■11	**SW-5-1/U3H**	SC20AUN-■11T□D	1	1 *2	120	15	99–121	110–130	64–96	74–102
SC-5-1/U	SC20AU-■22	**SW-5-1/U3H**	SC20AUN-■22T□D	2	2	120	15	99–121	110–130	64–96	74–102
SC-N1/U	SC25BAU-■22	**SW-N1/U3H**	SC25BAUN-■22T□D	2	2 *3	130	13	104–122	114–132	68–88	80–98
SC-N2/U	SC35BAU-■22	**SW-N2/U3H**	SC35BAUN-■22T□D	2	2 *3	130	13	104–122	114–132	68–88	80–98
SC-N2S/U	SC50BAU-■22	**SW-N2S/U3H**	SC50BAUN-■22T□D	2	2 *3	195	14.3	104–120	118–134	72–90	84–102
SC-N3/U	SC65BAU-■22	**SW-N3/U3H**	SC65BAUN-■22T□D	2	2 *3	195	14.3	104–120	118–134	72–90	84–102
SC-N4/U	SC80BAU-■22	**SW-N4/U3H**	SC80BAUN-■22T□D	2	2 *3	235	20	104–120	118–134	72–90	84–102

Notes: 1 The standard SC-N5 to SC-N16 types are provided with the SUPER MAGNET which holds without chattering even if the line voltage drops to 65% of its rated value, so preventing the troubles such as contact welding or coil burning.
2. *1 Auxiliary contact 1NC is available on request.
*2 Auxiliary contact 2NO or 2NC is available on request.
*3 Auxiliary contact 4NO+4NC is available on request
3. Enter the coil voltage code in the ■ mark.
Enter the thermal overload relay ampere setting range code in the □ mark.

■ Performance data

Type Contactor	Starter	Make and break capacity	Operating cycles per hour	Life expectancy (operations) Electrical	Mechanical
SC-03/U	**SW-03/U3H**	IEC60947-4-1 class AC-3	1800	2 million	2.5 million
SC-0/U	**SW-0/U3H**	Make: 10×Ie	1800	2 million	2.5 million
SC-05/U	**SW-05/U3H**	Break: 8×Ie	1800	2 million	2.5 million
SC-4-0/U	**SW-4-0/U3H**	(Ie : Operational current)	1800	2 million	2.5 million
SC-4-1/U	**SW-4-1/U3H**		1800	2 million	2.5 million
SC-5-1/U	**SW-5-1/U3H**		1800	2 million	2.5 million
SC-N1/U	**SW-N1/U3H**		1200	2 million	2.5 million
SC-N2/U	**SW-N2/U3H**		1200	1 million	1 million
SC-N2S/U	**SW-N2S/U3H**		1200	1 million	1 million
SC-N3/U	**SW-N3/U3H**		1200	1 million	1 million
SC-N4/U	**SW-N4/U3H**		1200	1 million	1 million

Downloaded from Arrow.com.

Mechanical latch contactors

Up to 315kW 440 Volts AC 3-phase

■ Description

Mechanical latch contactors are used where operating sequence continuity must be maintained regardless of any outside interruptions, such as voltage failure or instantaneous voltage drop. Typical applications are for electric furnaces, machine tool circuits, standby power supply and normal power changeover circuits in hospitals, schools and office buildings. These contactors are provided with two coils. One is CC (Closing Coil) and the other is TC (Tripping Coil).
An interlocking circuit is provided between the CC coil and the TC coil. Since a coil voltage is not applied during operation it is extremely quiet. Power consumption can also be saved.

AF88-801

SC-0/V

F88-1356

SC-5-1RM/V

■ Performance data

Frame size	Making capacity	Breaking capacity	Operating cycles per hour	Life expectancy (operations) Electrical	Mechanical
03/V to 5-1/V, 03/VG to 5-1/VG	10×Ie	8×Ie	1200	500,000	1 million
N1/VS to N3/VS	10×Ie	8×Ie	600	500,000	500,000
N4/VS to N12/VS	10×Ie	8×Ie	600	250,000	250,000
N14/VS	10×Ie	8×Ie	600	100,000	100,000

Notes: Ie: Rated operational current.
- Mechanical latch units cannot be sold separately. Such units are only sold attached to contactors.
- Do not detach mechanical latch units from contactors and do not make modifications such as attaching mechanical latch units to other contactors.

■ Types and ratings

• AC, AC/DC operated

Max. motor capacity (kW) 200V 240V	380V 440V	Rated operational current (A) 200V 240V	380V 440V	Rated thermal current Ith (A)	Non-reversing Type	Aux. contact NO	NC	Ordering code	Reversing Type	Aux. contact NO	NC	Ordering code
2.5	4	11	9	20	**SC-03/V**	–	–	SC11AV-■00	**SC03RM/V**	–	–	SC11RV-■00
3.5	5.5	13	12	20	**SC-0/V**	–	–	SC13AV-■00	**SC0RM/V**	–	–	SC13RV-■00
3.5	5.5	13	12	20	**SC-05/V**	1	–	SC14AV-■10	**SC05RM/V**	2	–	SC14RV-■10
3.5	5.5	13	12	20		–	1	SC14AV-■01		–	2	SC14RV-■01
4.5	7.5	18	16	25	**SC-4-0/V**	–	–	SC18AV-■00	**SC-4-0RM/V**	–	–	SC18RV-■00
5.5	11	22	22	32	**SC-4-1/V**	–	–	SC19AV-■00	**SC-4-1RM/V**	–	–	SC19RV-■00
5.5	11	22	22	32	**SC-5-1/V**	1	–	SC20AV-■10	**SC-5-1RM/V**	2	–	SC20RV-■10
5.5	11	22	22	32		–	1	SC20AV-■01		–	2	SC20RV-■01
5.5	11	22	22	32		1	2	SC20AV-■12		2	4	SC20RV-■12
7.5	15	32	32	50	**SC-N1/VS**	2	2	SC25BAE-■22	**SC-N1RM/VS**	4	4	SC25BRE-■22
11	18.5	40	40	60	**SC-N2/VS**	2	2	SC35BAE-■22	**SC-N2RM/VS**	4	4	SC35BRE-■22
15	22	50	50	80	**SC-N2S/VS**	2	2	SC50BAE-■22	**SC-N2SRM/VS**	4	4	SC50BRE-■22
18.5	30	65	65	100	**SC-N3/VS**	2	2	SC65BAE-■22	**SC-N3RM/VS**	4	4	SC65BRE-■22
22	40	80	80	135	**SC-N4/VS**	1	2	SC80BAE-■12	**SC-N4RM/VS**	2	4	SC80BRE-■12
30	55	105	105	150	**SC-N5/VS**	1	2	SC93BAE-■12	**SC-N5RM/VS**	2	4	SC93BRE-■12
37	60	125	125	150	**SC-N6/VS**	1	2	SC1CBAE-■12	**SC-N6RM/VS**	2	4	SC1CBRE-■12
45	75	150	150	200	**SC-N7/VS**	1	2	SC1FBAE-■12	**SC-N7RM/VS**	2	4	SC1FBRE-■12
55	90	180	180	260	**SC-N8/VS**	1	2	SC1JBAE-■12	**SC-N8RM/VS**	2	4	SC1JBRE-■12
65	110	220	220	260	**SC-N10/VS**	1	2	SC2CBAE-■12	**SC-N10RM/VS**	2	4	SC2CBRE-■12
90	160	300	300	350	**SC-N11/VS**	1	2	SC3ABAE-■12	**SC-N11RM/VS**	2	4	SC3ABRE-■12
120	220	400	400	450	**SC-N12/VS**	1	2	SC4ABAE-■12	**SC-N12RM/VS**	2	4	SC4ABRE-■12
180	315	600	600	660	**SC-N14/VS**	1	2	SC6ABAE-■12	**SC-N14RM/VS**	2	4	SC6ABRE-■12

Notes: Since SC-N1/VS to SC-N14/VS are provided with the SUPER MAGNET they operate on both AC or DC.
Enter the coil rated voltage code in the ■ mark, *see page 01/19*

• DC operated

Max. motor capacity (kW) 200V 240V	380V 440V	Rated operational current (A) 200V 240V	380V 440V	Rated thermal current Ith (A)	Non-reversing Type	Aux. contact NO	NC	Ordering code	Reversing Type	Aux. contact NO	NC	Ordering code
2.5	4	11	9	20	**SC-03/VG**	–	–	SC11AD-■00	**SC03RM/VG**	–	–	SC11RD-■00
3.5	5.5	13	12	20	**SC-0/VG**	–	–	SC13AD-■00	**SC0RM/VG**	–	–	SC13RD-■00
3.5	5.5	13	12	20	**SC-05/VG**	1	–	SC14AD-■10	**SC05RM/VG**	2	–	SC14RD-■10
3.5	5.5	13	12	20		–	1	SC14AD-■01		–	2	SC14RD-■01
4.5	7.5	18	16	25	**SC-4-0/VG**	–	–	SC18AD-■00	**SC-4-0RM/VG**	–	–	SC18RD-■00
5.5	11	22	22	32	**SC-4-1/VG**	–	–	SC19AD-■00	**SC-4-1RM/VG**	–	–	SC19RD-■00
5.5	11	22	22	32	**SC-5-1/VG**	1	–	SC20AD-■10	**SC-5-1RM/VG**	2	–	SC20RD-■10
5.5	11	22	22	32		–	1	SC20AD-■01		–	2	SC20RD-■01
5.5	11	22	22	32		1	2	SC20AD-■12		2	4	SC20RD-■12

Note: Enter the coil rated voltage code in the ■ mark, *see page 01/19*

Downloaded from Arrow.com.

■ Operating method

Closing

When the closing coil is energized the latch mechanism interlocks to latch and the NC contact connected in series with the closing coil opens and the coil is de-energized.

Tripping

When the tripping coil is energized the latch is released and tripping is carried out by means of the back spring. At this time the NO contact connected in series with the tripping coil opens.

■ Operating notes

- When carrying out a sequence operating check make sure that the load circuit is open.
- The electrical signal time for closing and tripping should be 0.3 sec. or more.
- Tripping coil is short time rated. Tripping coil: Max. 15 seconds
- In the cases of 03/V to N3/VS versions the contacts cannot be replaced. In the cases of those versions above N4/VS the contacts can be replaced.
- Both closing and tripping circuits should be electrically interlocked with each other.

■ Ordering information

Specify the following:

1. Ordering code
2. Auxiliary contact arrangement:
   In the case of the frame size 05/V, 05/VG, 5-1/V or 5-1/VG, specify the contact arrangement.
3. Closing and tripping coil
   For AC operated: Voltage and frequency
   For DC operated: Voltage

■ Coil characteristics

AC operated

Type	Power consumption Closing (VA)	Tripping (VA)	Coil voltage *
SC-03/V	95	150	100/100–110V AC 50/60Hz
SC-0/V	95	150	
SC-05/V	95	150	200/200–220V AC 50/60Hz
SC-4-0/V	95	150	
SC-4-1/V	95	150	
SC-5-1/V	95	150	
SC-N1/VS	100	140	100–110V AC 50/60Hz
SC-N2/VS	100	140	
SC-N2S/VS	115	140	200/220V AC 50/60Hz
SC-N3/VS	115	140	
SC-N4/VS	161	266	
SC-N5/VS	161	266	
SC-N6/VS	229	266	
SC-N7/VS	229	266	
SC-N8/VS	273	385	
SC-N10/VS	273	385	
SC-N11/VS	490	385	
SC-N12/VS	490	385	
SC-N14/VS	500	660	

Notes: *Other coil voltage can be supplied.
SC-03/V to 5-1/V: 24 to 220V AC 50/60Hz
SC-N1/VS to N12/VS: 24 to 220V AC 50/60Hz
SC-N14/VS: 100 to 220V AC 50/60Hz

DC operated

Type	Power consumption Closing (W)	Tripping (W)	Coil voltage *
SC-03/VG	7	150	100, 110V DC
SC-0/VG	7	150	
SC-05/VG	7	150	200, 220V DC
SC-4-0/VG	7	150	
SC-4-1/VG	7	150	
SC-5-1/VG	7	150	
SC-N1/VS	95	150	100–110V DC
SC-N2/VS	95	150	
SC-N2S/VS	110	150	200–220V DC
SC-N3/VS	110	150	
SC-N4/VS	153	198	
SC-N5/VS	153	198	
SC-N6/VS	216	198	
SC-N7/VS	216	198	
SC-N8/VS	260	294	
SC-N10/VS	260	294	
SC-N11/VS	515	294	
SC-N12/VS	515	294	
SC-N14/VS	500	660	

Notes: *Other coil voltage can be supplied.
SC-03/VG to 5-1/VG: 24 to 220V DC
SC-N1/VS to N12/VS: 24 to 220V DC
SC-N14/VS: 100 to 220V DC

■ Operating circuit

SC-03/V to 5-1/V
SC-03/VG to 5-1/VG

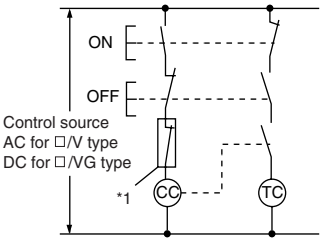

*1 NC contact for closing coil to be de-energized

SC-N1/VS to N3/VS

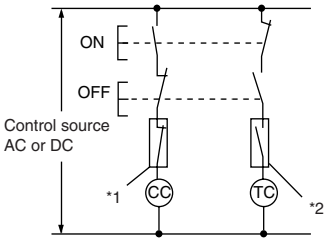

*1 NC contact for closing coil to be de-energized.
*2 NO contact for tripping coil to be de-energized.

SC-N4/VS to N14/VS

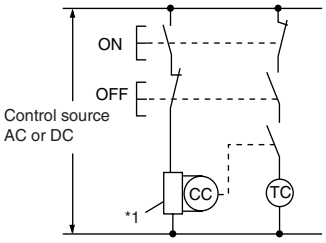

*1 Solid-state circuit for closing coil to be controlled.
(NC solid-state contact)

Downloaded from Arrow.com.

Mechanical latch type contactors

■ Dimensions, mm

SC-03/V to 5-1/V
SC-03/VG to 5-1/VG

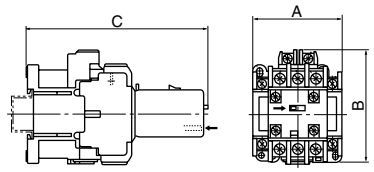

SC-N4/VS to N7/VS

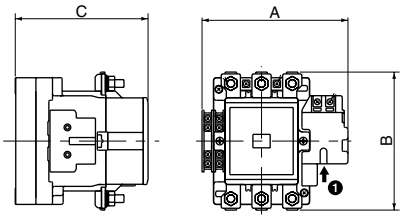

SC-N14/VS

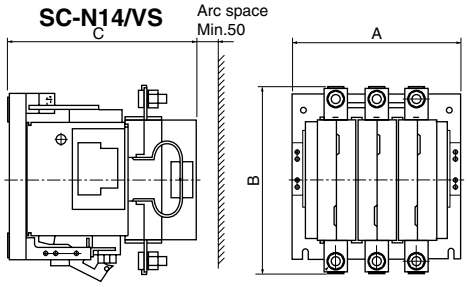

SC-N1/VS to N3/VS

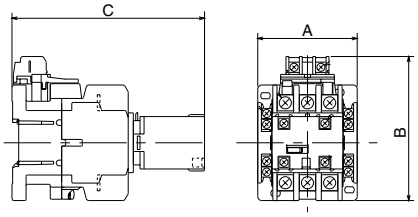

SC-N8/VS to N12/VS

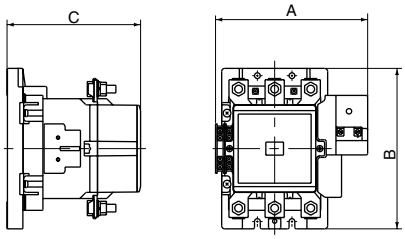

Dimensions for reference only.
Confirm before construction begins.

Type	A	B	C	Mass (kg)
SC-03/V, 0/V	43	81	128	0.43
SC-05/V	53	81	128	0.45
SC-4-0/V, 4-1/V	53	81	129	0.47
SC-5-1/V	64	81	129	0.49
SC-03/VG, 0/VG	43	81	155	0.66
SC-05/VG	53	81	155	0.69
SC-4-0/VG, 4-1/VG	53	81	156	0.71
SC-5-1/VG	64	81	156	0.73

Type	A	B	C	Mass (kg)
SC-N1/VS, N2/VS	74	108	143.5	0.75
SC-N2S/VS, N3/VS	88	130	158	1.25
SC-N4/VS,N5/VS	140	127	132	2.3
SC-N6/VS	152	144	138	2.9
SC-N7/VS	167.5	156	140	3.2
SC-N8/VS, N10/VS	199	209	174	5.7
SC-N11/VS, N12/VS	215.5	240	195	8.6
SC-N14/VS	290	332	331	37

■ Wiring diagrams

SC-03/V, 0/V, 4-0/V, 4-1/V
SC-03/VG, 0/VG, 4-0/VG, 4-1/VG

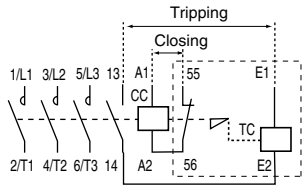

SC-05/V, 5-1/V SC-05/VG, 5-1/VG
(Aux. contact 1NO)

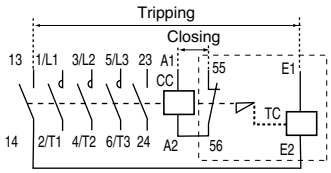

(Aux. contact 1NC)

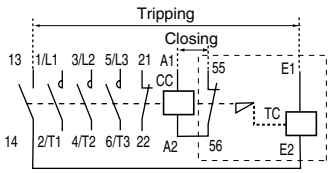

SC-5-1/V, /VG (Aux. contact 1NO+2NC)

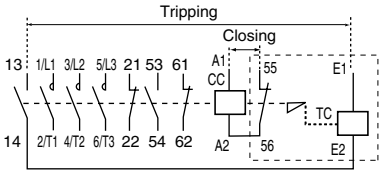

SC-N1/VS to N3/VS

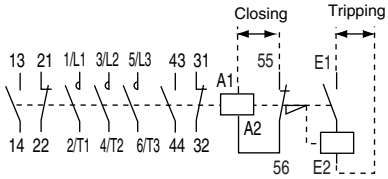

SC-N4/VS to N12/VS

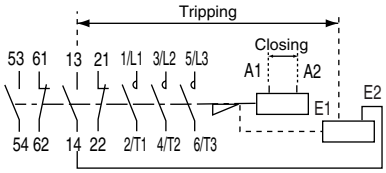

SC-N14/VS

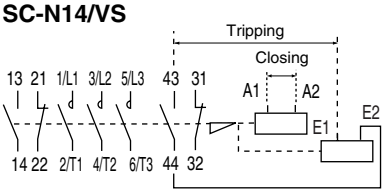

CC: Closing coil
TC: Tripping coil

Downloaded from Arrow.com.

Reversing mechanical latch contactors

■ Dimensions, mm
SC-03RM/V to 5-1RM/V
SC-03RM/VG to 5-1RM/VG

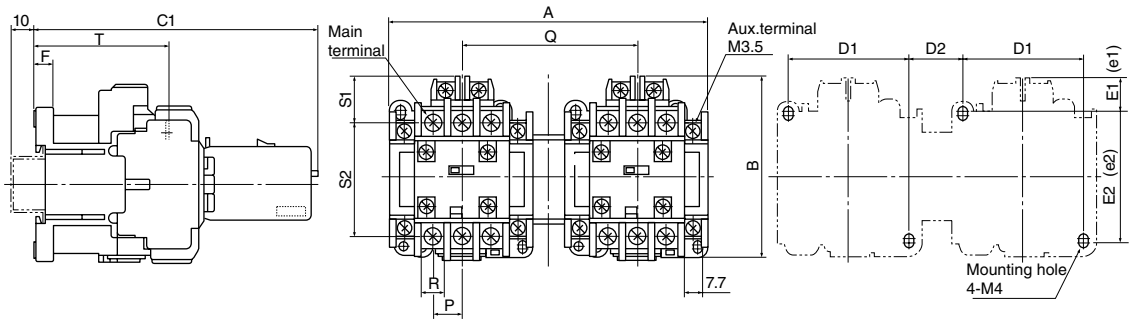

Type	Auxiliary contact	A	B	C1	D1	D2	E1(e_1)	E2(e_2)	F	P	Q	R	S1	S2	T	Main terminal	Mass (kg)
SC-03RM/V	–	99	81	128	34	22	18.5 (20.5)	52 (48)	8.5	10	56	7.7	23	43	61	M3.5	0.9
SC-0RM/V	–	99	81	128	34	22	18.5 (20.5)	52 (48)	8.5	10	56	7.7	23	43	61	M3.5	0.9
SC-05RM/V	2NO or 2NC	119	81	128	34	32	18.5 (20.5)	52 (48)	8.5	10	66	7.7	23	43	61	M3.5	0.94
SC-4-0RM/V	–	119	81	129	34	32	18.5 (20.5)	52 (48)	8.5	13	66	9.7	20	49	61	M4	0.98
SC-4-1RM/V	–	119	81	129	34	32	18.5 (20.5)	52 (48)	8.5	13	66	9.7	20	49	61	M4	0.98
SC-5-1RM/V	2NO or 2NC	141	81	129	54	23	14.5 (16.5)	60 (56)	8.5	13	77	9.7	20	49	61	M4	1.02
	2NO+4NC	165	81	129	54	23	14.5 (16.5)	60 (56)	8.5	13	77	9.7	20	49	61	M4	1.08
SC-03RM/VG	–	99	81	155	34	22	18.5 (20.5)	52 (48)	8.5	10	56	7.7	23	43	88	M3.5	1.36
SC-0RM/VG	–	99	81	155	34	22	18.5 (20.5)	52 (48)	8.5	10	56	7.7	23	43	88	M3.5	1.36
SC-05RM/VG	2NO or 2NC	119	81	155	34	32	18.5 (20.5)	52 (48)	8.5	10	66	7.7	23	43	88	M3.5	1.42
SC-4-0RM/VG	–	119	81	156	34	32	18.5 (20.5)	52 (48)	8.5	13	66	9.7	20	49	88	M4	1.46
SC-4-1RM/VG	–	119	81	156	34	32	18.5 (20.5)	52 (48)	8.5	13	66	9.7	20	49	88	M4	1.46
SC-5-1RM/VG	2NO or 2NC	141	81	156	54	23	14.5 (16.5)	60 (56)	8.5	13	77	9.7	20	49	88	M4	1.5
	2NO+4NC	165	81	156	54	23	14.5 (16.5)	60 (56)	8.5	13	77	9.7	20	49	88	M4	1.56

Fig. 1 SC-N1RM/VS to N3RM/VS

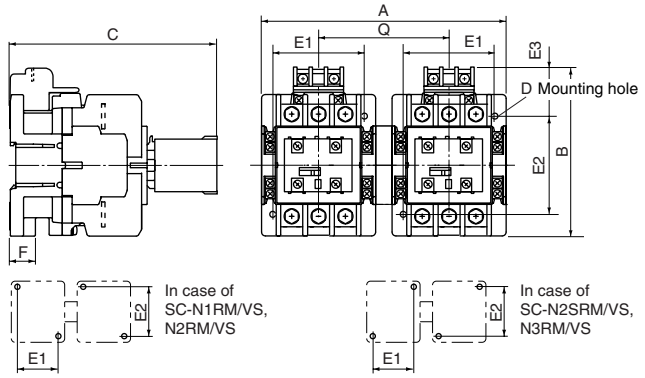

Fig. 2 SC-N4RM/VS to N12RM/VS

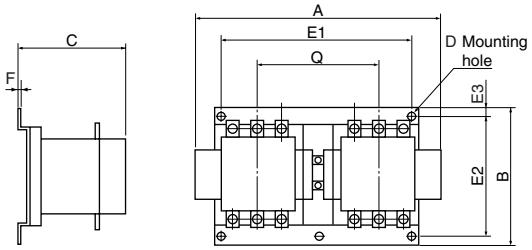

Fig. 3 SC-N14RM/VS

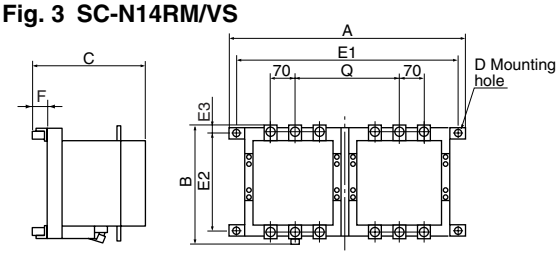

Type	A	B	C	D	E1	E2	E3	F	Q	Mass (kg)	Fig. No.
SC-N1RM/VS	161	108	143.5	4-M4	65	70	30	10.5	87	1.6	1
SC-N2RM/VS	161	108	143.5	4-M4	65	70	30	10.5	87	1.6	1
SC-N2SRM/VS	187	130	158	4-M4	70	75	38	10.5	100	2.6	1
SC-N3RM/VS	187	130	158	4-M4	70	75	38	10.5	100	2.6	1
SC-N4RM/VS	303	165	122	3-M5	200	150	7.5	1.6	135	5.0	2
SC-N5RM/VS	303	165	122	3-M5	200	150	7.5	1.6	135	5.0	2
SC-N6RM/VS	327	190	145	3-M5	220	175	7.5	1.6	147	6.7	2
SC-N7RM/VS	358	215	147	3-M6	260	200	7.5	2	162	8.1	2
SC-N8RM/VS	421	270	184	4-M6	300	250	10	2	177	13.0	2
SC-N10RM/VS	421	270	184	4-M6	300	250	10	2	177	13.0	2
SC-N11RM/VS	454	330	210	4-M8	300	300	15	2.3	192	21.4	2
SC-N12RM/VS	454	330	210	4-M8	300	300	15	2.3	192	21.4	2
SC-N14RM/VS	700	349	376	4-M10	650	250	41	45	324	80	3

Dimensions for reference only.
Confirm before construction begins.

Downloaded from Arrow.com.

Reversing mechanical latch contactors

■ Wiring diagrams

SC-03RM/V, 0RM/V, 4-0RM/V, 4-1RM/V
SC-03RM/VG, 0RM/VG, 4-0RM/VG, 4-1RM/VG

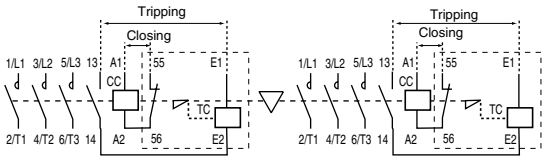

CC: Closing coil
TC: Tripping coil

SC-05RM/V, 5-1RM/V
SC-05RM/VG, 5-1RM/VG
Auxiliary contact: 1NO×2

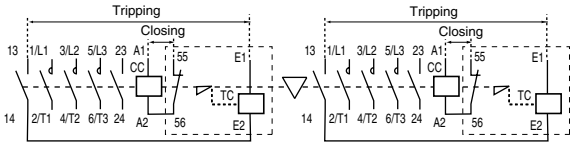

CC: Closing coil
TC: Tripping coil

SC-05RM/V, 5-1RM/V
SC-05RM/VG, 5-1RM/VG
Auxiliary contact: 1NC×2

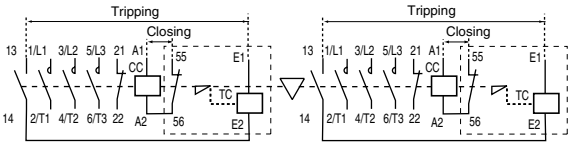

CC: Closing coil
TC: Tripping coil

SC-5-1RM/V
SC-5-1RM/VG
Auxiliary contact: 2×(1NO+2NC)

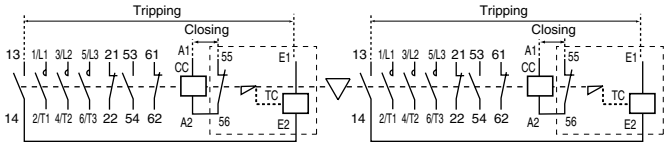

CC: Closing coil
TC: Tripping coil

SC-N1RM/VS to N3RM/VS

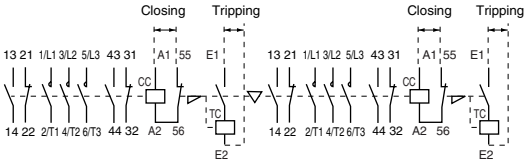

CC: Closing coil
TC: Tripping coil

SC-N4RM/VS to N12RM/VS

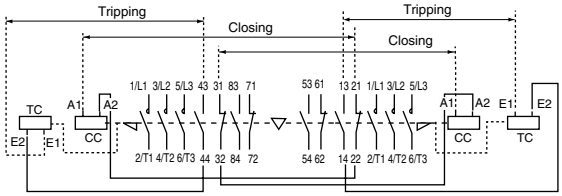

CC: Closing coil
TC: Tripping coil

SC-N14RM/VS

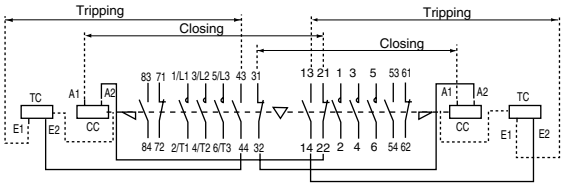

CC: Closing coil
TC: Tripping coil

Downloaded from Arrow.com.

Motor starters for heavy starting duty conditions

Up to 315kW 440 Volts 3-phase

■ Description

This starter is designed for applications to those loads where the inrush current at the moment of starting persists for a long period, such as with blowers, winders, fans and centrifugal separators whose inertia force is large. In these cases the inrush current could last up to 7-8 sec., and would cause a standard type starter to misstrip.
FUJI heavy load starters are highly suitable for such conditions and are provided with long time operating type thermal overload relays. In this type of overload relay the small-sized saturable core reactors are connected in parallel with the heater elements. These divert the inrush current at the time of starting.

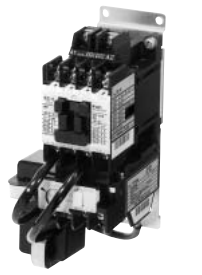

AF88-1408

SW-0/□L

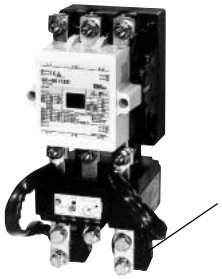

AF00-299

SW-N6/□L

■ Types and ratings

Type	Ordering code	Aux. contact NO	Aux. contact NC	Max. motor capacity (kW) 200V 240V	Max. motor capacity (kW) 380V 440V	Operational current (A) 200V 240V	Operational current (A) 380V 440V	Combined thermal over-load relay (3-element) Type
SW-03/3L	SC11AAF-■10T□	1	–	2.5	4	11	9	TR-0NL/3
SW-03/3L	SC11AAF-■01T□	–	1	2.5	4	11	9	TR-0NL/3
SW-0/3L	SC13AAF-■10T□	1	–	3.5	5.5	13	12	TR-0NL/3
SW-0/3L	SC13AAF-■01T□	–	1	3.5	5.5	13	12	TR-0NL/3
SW-05/3L	SC14AAF-■20T□	2	–	3.5	5.5	13	12	TR-0NL/3
SW-05/3L	SC14AAF-■11T□	1	1	3.5	5.5	13	12	TR-0NL/3
SW-05/3L	SC14AAF-■02T□	–	2	3.5	5.5	13	12	TR-0NL/3
SW-4-0/3L	SC18AAF-■10T□	1	–	4.5	7.5	18	16	TR-5-1NL/3
SW-4-0/3L	SC18AAF-■01T□	–	1	4.5	7.5	18	16	TR-5-1NL/3
SW-4-1/3L	SC19AAF-■10T□	1	–	5.5	11	22	22	TR-5-1NL/3
SW-4-1/3L	SC19AAF-■01T□	–	1	5.5	11	22	22	TR-5-1NL/3
SW-5-1/3L	SC20AAF-■20T□	2	-	5.5	11	22	22	TR-5-1NL/3
SW-5-1/3L	SC20AAF-■11T□	1	1	5.5	11	22	22	TR-5-1NL/3
SW-5-1/3L	SC20AAF-■02T□	–	2	5.5	11	22	22	TR-5-1NL/3
SW-5-1/3L	SC20AAF-■22T□	2	2	5.5	11	22	22	TR-5-1NL/3
SW-N1/3L	SC25BAAF-■22T□	2	2	7.5	15	32	32	TR-N2L/3
SW-N2/3L	SC35BAAF-■22T□	2	2	11	18.5	40	40	TR-N2L/3
SW-N2S/3L	SC50BAAF-■22T□	2	2	15	22	50	50	TR-N3L/3
SW-N3/3L	SC65BAAF-■22T□	2	2	18.5	30	65	65	TR-N3L/3
SW-N4/3L	SC80BAAF-■22T□	2	2	22	40	80	80	TR-N5L/3
SW-N5A/3L	SC93CAAF-■22T□	2	2	30	55	105	105	TR-N5L/3
SW-N6/3L	SC1CBAAF-■22T□	2	2	37	60	125	125	TR-N6L/3
SW-N7/3L	SC1FBAAF-■22T□	2	2	45	75	150	150	TR-N7L/3
SW-N8/3L	SC1JBAAF-■22T□	2	2	55	90	180	180	TR-N10L/3
SW-N10/3L	SC2CBAAF-■22T□	2	2	65	110	220	220	TR-N10L/3
SW-N11/3L	SC3ABAAF-■22T□	2	2	90	160	300	300	TR-N11L/3
SW-N12/3L	SC4ABAAF-■22T□	2	2	120	220	400	400	TR-N12L/3
SW-N14/3L	SC6ABAAF-■22T□	2	2	180	315	600	600	TR-N14L/3

Notes: 1. ■ Enter the operating coil voltage code.
2. □ Enter the thermal overload relay ampere setting range code.
3. Starters with 2-element overload relay are also available SW-□/2L.

■ Ordering information

Specify the following:
1. Ordering code
2. Overload relay setting range code
3. Operating coil voltage code
4. Auxiliary contact arrangement

■ Thermal overload relay:

See page 01/88.

■ Performance data:

Same as standard type
See page 01/22.

■ Ratings of coil and auxiliary contacts:

See pages 01/20, 22 and 23.

■ Wiring diagrams:

See page 01/29, 30 and 32.
Same as the standard types except thermal overload relays.

Downloaded from Arrow.com.

■ Dimensions, mm
SW-03/2L to 5-1/2L
SW-03/3L to 5-1/3L

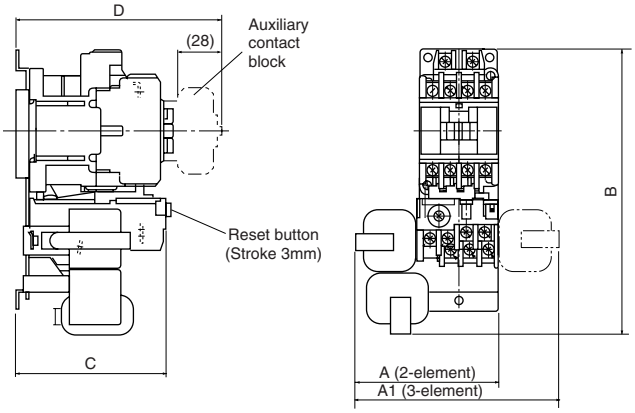

Type 2-element	3-element	A	A1	B	C	D *	Mass (kg) 2-element	3-element
SW-03/2L	**SW-03/3L**	79	115	157	83	113	0.62	0.72
SW-0/2L	**SW-0/3L**	79	115	157	83	113	0.62	0.72
SW-05/2L	**SW-05/3L**	84	120	157	84	114	0.64	0.74
SW-4-0/2L	**SW-4-0/3L**	88	124	157	83	114	0.66	0.76
SW-4-1/2L	**SW-4-1/3L**	88	124	157	83	114	0.66	0.76
SW-5-1/2L	**SW-5-1/3L**	89	124	157	83	114	0.69	0.79
SW-5-1/2L	**SW-5-1/3L**	89	124	157	83	114	0.71	0.81

C: Without front mounting auxiliary contact block
D: With front mounting auxiliary contact block
* Mounted auxiliary contacts 2NO+2NC

SW-N1/2L, N2/2L
SW-N1/3L, N2/3L

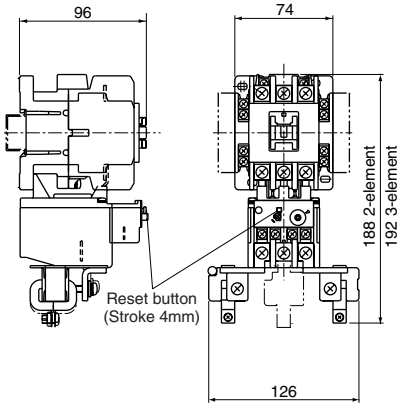

Mass: SW-N1/2L, N2/2L: 1.01kg
SW-N1/3L, N2/3L: 1.13kg

SW-N2S/2L to SW-N7/2L
SW-N2S/3L to SW-N7/3L

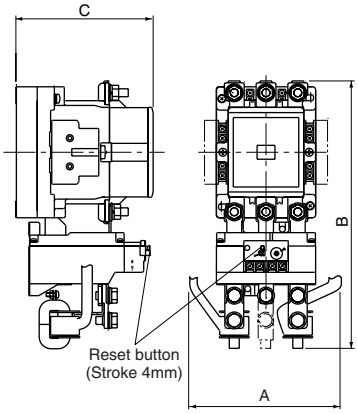

SW-N8/2L
SW-N8/3L

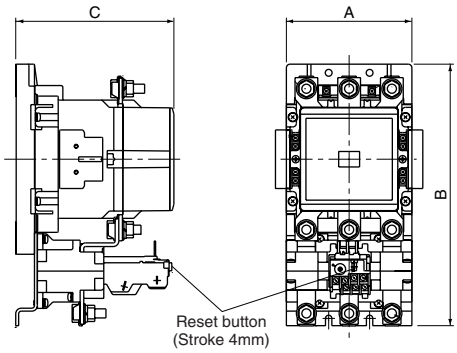

Note: SW-N10/2L, N11/2L, N12/2L and N14/2L, SW-N10/3L, N11/3L, N12/3L and N14/3L, have the same dimensions as SW-N10/3H, N11/3H, N12/3H and N14/3H, respectively.

Type 2-element	3-element	A	B 2-element	B 3-element	C	Mass (kg) 2-element	3-element
SW-N2S/2L	**SW-N2S/3L**	138	219	219	111	1.54	1.66
SW-N3/2L	**SW-N3/3L**	138(149)*	219(202)*	219(224)*	111	1.54	1.64
SW-N4/2L	**SW-N4/3L**	138(149)*	230(214)*	230(236)*	117	2.26	2.54
SW-N5A/2L	**SW-N5A/3L**	149	214	236	132	2.66	2.94
SW-N6/2L	**SW-N6/3L**	165	270	270	138	3.62	3.93
SW-N7/2L	**SW-N7/3L**	165	281	281	140	3.92	4.23
SW-N8/2L	**SW-N8/3L**	138	287	287	174	6.8	6.8

*( ) = In case of ampere setting range 45 to 65A

Dimensions for reference only. Confirm before construction begins.

Downloaded from Arrow.com.

Motor starters with quick operating thermal overload relay

Up to 55kW 440 Volts 3-phase

■ Description

This motor starter is fitted with a quick operating type thermal overload relay which makes suitable for controlling submersible motor pumps and compressors. These motor windings are cooled by using liquid or other media.
Thus their overload capacity will be less than standard type motor. This also means that these motors cannot be protected by standard type overload relays since their operation would be rather slow. The starters are available in types ranging from SW-03/3Q to SW-N5/3Q. All thermal overload relays have 3-heater elements.

■ Features

- Thermal overload relays are designed to have similar starting characteristics to those of the motors. These relays will operate quicker than the standard type in the face of a locked rotor current.
  (Refer to the graph.)
- Compact with external dimensions similar to the standard type.
- The ampere setting dial of the overload relays is calibrated to an RC scale (Rated current). All that is necessary is to set a value equal to the full load current of the motor.

KK05-042

SW-0/3Q

KK05-056

SW-N5/3Q

■ Operating characteristics

For explanation only

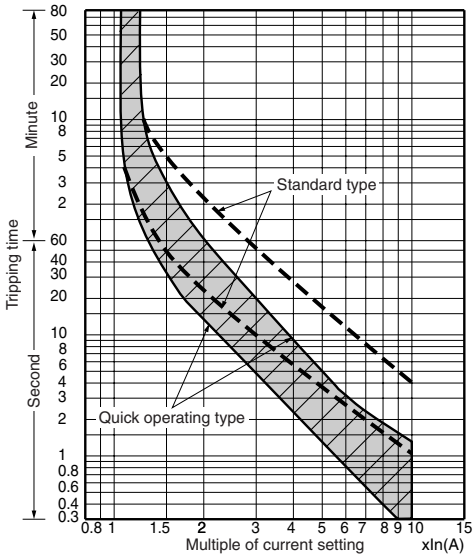

■ Ordering information

Specify the following:
1. Ordering code
2. Overload relay setting range code
3. Operating coil voltage code
4. Auxiliary contact arrangement

■ Performance data:

Same as standard types
See page 01/22.
Conforming to Class AC-3, IEC60947-4-1.

■ Ratings of coil and auxiliary contact:

See pages 01/20, 22 and 23.

■ Dimensions and wiring diagrams:

Same as standard types
See page 01/29, 30 and 31.

■ Thermal overload relay:

See page 01/88.

■ Ratings

Type	Ordering code	Max. motor capacity (kW) 200V 240V	Max. motor capacity (kW) 380V 440V	Rated operational current (A) 200V 240V	Rated operational current (A) 380V 440V	Auxiliary contact NO	Auxiliary contact NC	Combined thermal overload relay Type	Combined thermal overload relay Ordering code
SW-03/3Q	SC11AAS-■10T□	2.5	4	11	9	1	– *1	TR-0NQ	TR13SW-□
SW-0/3Q	SC13AAS-■10T□	3.5	5.5	13	12	1	– *1	TR-0NQ	TR13SW-□
SW-05/3Q	SC14AAS-■11T□	3.5	5.5	13	12	1	1 *2	TR-0NQ	TR13SW-□
SW-4-0/3Q	SC18AAS-■10T□	4.5	7.5	18	16	1	– *1	TR-5-1NQ	TR20SW-□
SW-4-1/3Q	SC19AAS-■10T□	4.5	7.5	18	16	1	– *1	TR-5-1NQ	TR20SW-□
SW-5-1/3Q	SC20AAS-■11T□	4.5	7.5	18	16	1	1 *3	TR-5-1NQ	TR20SW-□
SW-5-1/3Q	SC20AAS-■22T□	4.5	7.5	18	16	2	2	TR-5-1NQ	TR20SW-□
SW-N1/3Q	SC25BAAS-■22T□	7.5	15	32	32	2	2	TR-N2Q	TR35BSW-□
SW-N2/3Q	SC35BAAS-■22T□	11	18.5	40	40	2	2	TR-N2Q	TR35BSW-□
SW-N2S/3Q	SC50BAAS-■22T□	15	22	50	50	2	2	TR-N3Q	TR65BSW-□
SW-N3/3Q	SC65BAAS-■22T□	18.5	30	65	65	2	2	TR-N3Q	TR65BSW-□
SW-N4/3Q	SC80BAAS-■22T□	22	40	80	80	2	2	TR-N5Q	TR93BSW-□
SW-N5A/3Q	SC93CAAS-■22T□	30	55	105	105	2	2	TR-N5Q	TR93BSW-□

Notes: *1 Auxiliary contact 1NC is also available on request.
*2 Auxiliary contact 2NO or 2NC is also available on request.
*3 Auxiliary contact 2NO, 2NC or 2NO+2NC is also available on request.
Enter the coil voltage code in the ■ mark.
Enter the thermal overload relay ampere setting range code in the □ mark.

Downloaded from Arrow.com.

Motor starters with phase-loss protective device

Up to 315 kW 440 Volts 3-phase

■ Description

These starters are provided with a FUJI TK type thermal overload relay. This has an phase-loss protection function as well as the ordinary overload protection.
These devices prevent damage due to single-phasing such as fuse melting, cable troubles or loosening through excessive vibration.
They are highly suitable for such applications as cooling fans or circulating pumps for power transformers.
The switches use FUJI SC series contactors which have a life expectancy of over 1 million operations and which makes them suitable for motor controls for industrial use.
Size range from 03 to N14 with capacities from 2.5kW to 180kW 220 Volts AC. Starters are available in both open- and enclosed-type versions.

Reversing motor starters with TK relays are also available.

■ Ordering information

Specify the following:
1. Ordering code
2. Overload relay setting range code
3. Operating coil voltage code
4. Auxiliary contact arrangement

■ Performance data:

Same as standard types.
See page 01/22.

■ Ratings of coil and auxiliary contacts:

See pages 01/20, 22 and 23.

■ Dimensions and wiring diagrams:

See pages 01/29, 30, 31 and 32.

■ Characteristics of TK relay:

See page 01/100.

■ Thermal overload relays with phase-loss protection

The TK thermal overload relay perfectly matches the heat characteristics of 3-phase squirrel-cage induction motors. The heater element and phase-loss protective mechanism are built inside the enclosure.
The characteristics of the phase-loss mechanism co-ordinate with the temperature rise curve of the stator winding at the time of phase-loss.
When an phase-loss is produced during the full load operation of a 3-phase motor a current larger than the full load current will flow and operate the thermal overload relay.
Under this load condition the standard type OL relay can provide adequate protection. If the load is approx. 60% of the full load current the motor will continue a single phase running and the line current will become almost equal to the full load current.
However, since it will not reach the minimum operating point of OL relay the starter will not be tripped.
In the case of a delta winding motor a phase current of approx. 115% of the line full load current will flow in windings. This overcurrent results in a temperature rise in the motor windings and damage due to overheating can be expected.
FUJI TK thermal overload relays are provided with ADL mechanism which can correctly detect phase-loss under such medium load conditions. This sophisticated detecting mechanism can take corrective action quicker in the case of overload running.
The ADL mechanism operates on a dependable and simple level design.
It works as follows:—
The heater, in phase-loss, will be cool since no load current flows, while heater of other phases will heat up since a large current flows.
The difference in temperature between the cold and hot heater elements causes the shift lever to operate the Trip/Alarm contact.
The operating current range is 105%–120% of the rated current set on the dial.

KK05-042

SW-0/2E

KK05-057

SW-N6/2E

Reversing motor starter with phase-loss protective device

■ Description

This reversing motor starter uses two contactors and TK type thermal overload relay. The TK relay is provided with a heater element and a built-in mechanism for phase-loss protection use, which match with the thermal characteristics of 3-phase squirrel-cage rotor motor. This eliminates the possibility of damage in the case of the motor overheating.

The TK relay also features manual tripping, a trip-free mechanism, MANUAL/AUTO selector lever, wide range dial ampere adjustment, ambient temperature compensator and 1NO•1NC trip/alarm contact, etc.
Starters can be supplied with either open type or provided with enclosures.
The general purpose enclosure is made of pressed steel and is not provided with a pushbutton.

■ Types and ratings/Non-reversing

Max. motor capacity (kW) 200V 240V	380V 440V	Operational current (A) 200V 240V	380V 440V	Auxiliary contact Standard	Open Type	Ordering code	Enclosed Type	Ordering code	Combined thermald overload relay
2.5	4	11	9	1NO *1	**SW-03/2E**	SC11AAE-■10T□	**SW-03C/2E**	SC11CAE-■10T□	TK-0N
3.5	5.5	13	12	1NO *1	**SW-0/2E**	SC13AAE-■10T□	**SW-0C/2E**	SC13CAE-■10T□	TK-0N
3.5	5.5	13	12	1NO+1NC *2	**SW-05/2E**	SC14AAE-■11T□	**SW-05C/2E**	SC14CAE-■11T□	TK-0N
4.5	7.5	18	16	1NO *1	**SW-4-0/2E**	SC18AAE-■10T□	**SW-4-0C/2E**	SC18CAE-■10T□	TK-5-1N
5.5	11	22	22	1NO *1	**SW-4-1/2E**	SC19AAE-■10T□	**SW-4-1C/2E**	SC19CAE-■10T□	TK-5-1N
5.5	11	22	22	1NO+1NC *3	**SW-5-1/2E**	SC20AAE-■11T□	**SW-5-1C/2E**	SC20CAE-■11T□	TK-5-1N
7.5	15	32	32	2NO+2NC *4	**SW-N1/2E**	SC25BAAE-■22T□	**SW-N1C/2E**	SC25BCAE-■22T□	TK-N2
11	18.5	40	40	2NO+2NC *4	**SW-N2/2E**	SC35BAAE-■22T□	**SW-N2C/2E**	SC35BCAE-■22T□	TK-N2
15	22	50	50	2NO+2NC *4	**SW-N2S/2E**	SC50BAAE-■22T□	**SW-N2SC/2E**	SC50BCAE-■22T□	TK-N3
18.5	30	65	65	2NO+2NC *4	**SW-N3/2E**	SC65BAAE-■22T□	**SW-N3C/2E**	SC65BCAE-■22T□	TK-N3
22	40	80	80	2NO+2NC *4	**SW-N4/2E**	SC80BAAE-■22T□	**SW-N4C/2E**	SC80BCAE-■22T□	TK-N5
30	55	105	105	2NO+2NC *4	**SW-N5A/2E**	SC93CAAE-■22T□	**SW-N5AC/2E**	SC93CCAE-■22T□	TK-N5
37	60	125	125	2NO+2NC *4	**SW-N6/2E**	SC1CBAAE-■22T□	**SW-N6C/2E**	SC1CBCAE-■22T□	TK-N6
45	75	150	150	2NO+2NC *4	**SW-N7/2E**	SC1FBAAE-■22T□	**SW-N7C/2E**	SC1FBCAE-■22T□	TK-N7
55	90	180	180	2NO+2NC *4	**SW-N8/2E**	SC1JBAAE-■22T□	**SW-N8C/2E**	SC1JBCAE-■22T□	TK-N8
65	110	220	220	2NO+2NC *4	**SW-N10/2E**	SC2CBAAE-■22T□	**SW-N10C/2E**	SC2CBCAE-■22T□	TK-N10
90	160	300	300	2NO+2NC *4	**SW-N11/2E**	SC3ABAAE-■22T□	**SW-N11C/2E**	SC3ABCAE-■22T□	TK-N11
120	220	400	400	2NO+2NC *4	**SW-N12/2E**	SC4ABAAE-■22T□	**SW-N12C/2E**	SC4ABCAE-■22T□	TK-N12
180	315	600	600	2NO+2NC *4	**SW-N14/2E**	SC6ABAAE-■22T□	**SW-N14C/2E**	SC6ABCAE-■22T□	TK-N14

Notes: Enter the coil voltage code in the ■ mark.
Enter the thermal overload relay ampere setting range code in the □ mark.
*1 Auxiliary contact 1NC is available on request.
*2 Auxiliary contact 2NO or 2NC is available on request.
*3 Auxiliary contact 2NO, 2NC or 2NO+2NC is available on request. However, 2NO+2NC is not available for enclosed types.
*4 Auxiliary contact 4NO+4NC is available on request for frame sizes N1 and above.

■ Types and ratings/Reversing

Max. motor capacity (kW) 200V 240V	380V 440V	Operational current (A) 200V 240V	380V 440V	Auxiliary contact Standard	Open Type	Ordering code	Enclosed Type	Ordering code	Combined thermald overload relay
2.5	4	11	9	1NC × 2 *1	**SW-03RM/2E**	SC11RAE-■01T□	**SW-03RMC/2E**	SC11MAE-■01T□	TK-0N
3.5	5.5	13	12	1NC × 2 *1	**SW-0RM/2E**	SC13RAE-■01T□	**SW-0RMC/2E**	SC13MAE-■01T□	TK-0N
3.5	5.5	13	12	(1NO+1NC) × 2 *2	**SW-05RM/2E**	SC14RAE-■11T□	**SW-05RMC/2E**	SC14MAE-■11T□	TK-0N
4.5	7.5	18	16	1NC × 2 *1	**SW-4-0RM/2E**	SC18RAE-■01T□	**SW-4-0RMC/2E**	SC18MAE-■01T□	TK-5-1N
5.5	11	22	22	1NC × 2 *1	**SW-4-1RM/2E**	SC19RAE-■01T□	**SW-4-1RMC/2E**	SC19MAE-■01T□	TK-5-1N
5.5	11	22	22	(1NO+1NC) × 2 *3	**SW-5-1RM/2E**	SC20RAE-■11T□	**SW-5-1RMC/2E**	SC20MAE-■11T□	TK-5-1N
7.5	15	32	32	(2NO+2NC) × 2 *4	**SW-N1RM/2E**	SC25BRAE-■22T□	**SW-N1RMC/2E**	SC25BMAE-■22T□	TK-N2
11	18.5	40	40	(2NO+2NC) × 2 *4	**SW-N2RM/2E**	SC35BRAE-■22T□	**SW-N2RMC/2E**	SC35BMAE-■22T□	TK-N2
15	22	50	50	(2NO+2NC) × 2 *4	**SW-N2SRM/2E**	SC50BRAE-■22T□	**SW-N2SRMC/2E**	SC50BMAE-■22T□	TK-N3
18.5	30	65	65	(2NO+2NC) × 2 *4	**SW-N3M/2E**	SC65BRAE-■22T□	**SW-N3RMC/2E**	SC65BMAE-■22T□	TK-N3
22	40	80	80	(2NO+2NC) × 2 *4	**SW-N4RM/2E**	SC80BRAE-■22T□	**SW-N4RMC/2E**	SC80BMAE-■22T□	TK-N5
30	55	105	105	(2NO+2NC) × 2 *4	**SW-N5ARM/2E**	SC93CRAE-■22T□	**SW-N5ARMC/2E**	SC93CMAE-■22T□	TK-N5
37	60	125	125	(2NO+2NC) × 2 *4	**SW-N6RM/2E**	SC1CBRAE-■22T□	**SW-N6RMC/2E**	SC1CBMAE-■22T□	TK-N6
45	75	150	150	(2NO+2NC) × 2 *4	**SW-N7RM/2E**	SC1FBRAE-■22T□	**SW-N7RMC/2E**	SC1FBMAE-■22T□	TK-N7
55	90	180	180	(2NO+2NC) × 2 *4	**SW-N8RM/2E**	SC1JBRAE-■22T□	**SW-N8RMC/2E**	SC1JBMAE-■22T□	TK-N8
65	110	220	220	(2NO+2NC) × 2 *4	**SW-N10RM/2E**	SC2CBRAE-■22T□	**SW-N10RMC/2E**	SC2CBMAE-■22T□	TK-N10
90	160	300	300	(2NO+2NC) × 2 *4	**SW-N11RM/2E**	SC3ABRAE-■22T□	**SW-N11RMC/2E**	SC3ABMAE-■22T□	TK-N11
120	220	400	400	(2NO+2NC) × 2 *4	**SW-N12RM/2E**	SC4ABRAE-■22T□	**SW-N12RMC/2E**	SC3ABMAE-■22T□	TK-N12
180	315	600	600	(2NO+2NC) × 2 *4	**SW-N14RM/2E**	SC6ABRAE-■22T□	**SW-N14RMC/2E**	SC6ABMAE-■22T□	TK-N14

Notes: Enter the coil voltage code in the ■ mark.
Enter the thermal overload relay ampere setting range code in the □ mark.
*1 Auxiliary contact 1NO×2 is available on request. However, these contactors are not electrically interlocked. Be sure to arrange electrical interlock circuit externally to avoid short-circuit accidents.
*2 Auxiliary contact 2NC×2 is available on request.
*3 Auxiliary contact 2NC×2 or (2NO+2NC)×2 is available on request.
However, (2NO+2NC)×2 is not available for enclosed types.
*4 Auxiliary contact (3NO+3NC)×2 is available on request.

Magnetic Motor Starters
SW series
With phase-loss and phase-sequence protective device

Motor starters with phase-loss and phase-sequence relays
Up to 315kW 440 Volts 3-phase

■ Description
These starters are fitted with TK type thermal overload relay and phase-sequence relay. The phase-sequence relay only permits engagement of the starter when the phase rotation is confirmed to be correct.
These switches are mainly used for construction site machinery, window shutters, machine tools, compressors, freezers, conveyors, underwater pumps, car washing machines, blowers and similar applications. They give excellent protection against damage and overheating resulting from phase-loss operation.

■ Ordering information
Specify the following:
1. Ordering code
   2E type motor starter and phase sequence relay QE-20N.
2. Overload relay setting range code
3. Operating coil voltage code

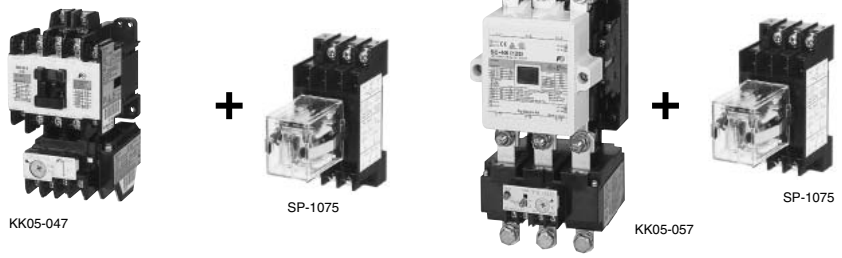

SW-5-1/2E **QE-20N** **SW-N6/2E** **QE-20N**

Phase sequence protective relay QE-20N

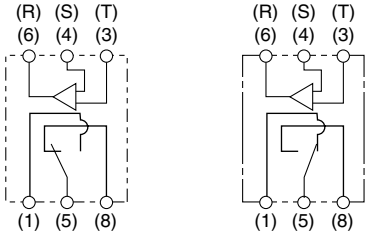

• Power off
• Phase-sequence is not correct.

Phase-sequence is correct.

■ Types and ratings

Max. motor capacity (kW) 200V 240V	380V 440V	Operational current (A) 200V 240V	380V 440V	Auxiliary contact Standard	Starter with 2E type thermal overload relay Type	Ordering code	Phase-sequence protective relay Type	Ordering code
2.5	4	11	9	1NO *1	**SW-03/2E**	SC11AAE-■10T□	200-220V:	
3.5	5.5	13	12	1NO *1	**SW-0/2E**	SC13AAE-■10T□	**QE-20N**	TQ1CPN
3.5	5.5	13	12	1NO + 1NC *2	**SW-05/2E**	SC14AAE-■11T□		
4.5	7.5	18	16	1NO *1	**SW-4-0/2E**	SC18AAE-■10T□	380-415V:	
5.5	11	22	22	1NO *1	**SW-4-1/2E**	SC19AAE-■10T□	**QE-40N**	TQ2CPN
5.5	11	22	22	1NO + 1NC *3	**SW-5-1/2E**	SC20AAE-■11T□		
5.5	11	22	22	2NO + 2NC	**SW-5-1/2E**	SC20AAE-■22T□		
7.5	15	32	32	2NO + 2NC *4	**SW-N1/2E**	SC25BAAE-■22T□		
11	18.5	40	40	2NO + 2NC *4	**SW-N2/2E**	SC35BAAE-■22T□		
15	22	50	50	2NO + 2NC *4	**SW-N2S/2E**	SC50BAAE-■22T□		
18.5	30	65	65	2NO + 2NC *4	**SW-N3/2E**	SC65BAAE-■22T□		
22	40	80	80	2NO + 2NC *4	**SW-N4/2E**	SC80BAAE-■22T□		
30	55	105	105	2NO + 2NC *4	**SW-N5A/2E**	SC93CAAE-■22T□		
37	60	125	125	2NO + 2NC *4	**SW-N6/2E**	SC1CBAAE-■22T□		
45	75	150	150	2NO + 2NC *4	**SW-N7/2E**	SC1FBAAE-■22T□		
55	90	180	180	2NO + 2NC *4	**SW-N8/2E**	SC1JBAAE-■22T□		
65	110	220	220	2NO + 2NC *4	**SW-N10/2E**	SC2CBAAE-■22T□		
90	160	300	300	2NO + 2NC *4	**SW-N11/2E**	SC3ABAAE-■22T□		
120	220	400	400	2NO + 2NC *4	**SW-N12/2E**	SC4ABAAE-■22T□		
180	315	600	600	2NO + 2NC *4	**SW-N14/2E**	SC6ABAAE-■22T□		

Notes: Enter the coil voltage code in the ■ mark.
Enter the thermal overload relay ampere setting range code in the □ mark.
*1 Auxiliary contact 1NC is available on request.
*2 Auxiliary contact 2NO or 2NC is available on request.
*3 Auxiliary contact 2NO or 2NC is available on request.
*4 Auxiliary contact 4NO+4NC is available on request for frame sizes N1 and above.

■ Performance data:
Same as standard types.
See page 01/22.

■ Ratings of coil and auxiliary contacts:
See pages 01/20, 22 and 23.

■ TK type thermal overload relays:
See page 01/100.

■ Thermal overload relays with phase-loss and phase-sequence protective relays
Motor starters with 3E relay are fitted with both TK type thermal overload and QE-20N type phase-sequence protective relays.

If the phase rotation of the power supply is not correct the relay will not permit the starter to be switched ON.
These starters provide motors with accurate and consistent protection under overcurrent, phase-loss and reverse-phase conditions.

■ **Method of operation**
The FUJI phase-sequence relay contacts 1–5 will close if the phase rotation of the power source is correct. In case the rotation is incorrect the contacts 1–5 will remain open and the magnetic coil A1–A2 will not be energized.

■ **Dimensions, mm**

● **Starter with phase-loss protection SW-03/2E to 14N/2E (Open)**
Same as standard types.
See pages 01/29 to 01/32.

■ **Wiring diagrams (example)**

● **QE-20N, 20NL**
200–220V

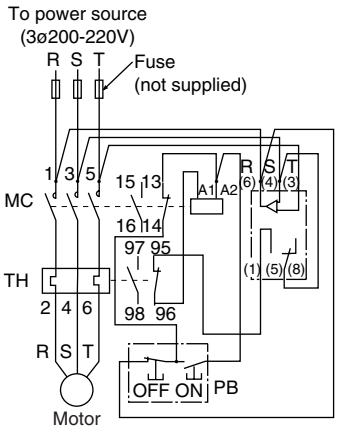

● **QE-40N**
380–415V

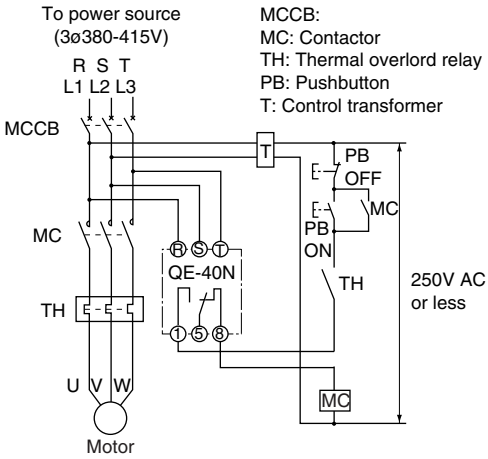

● **Phase-sequence protective relay**
QE-20N, 20NL

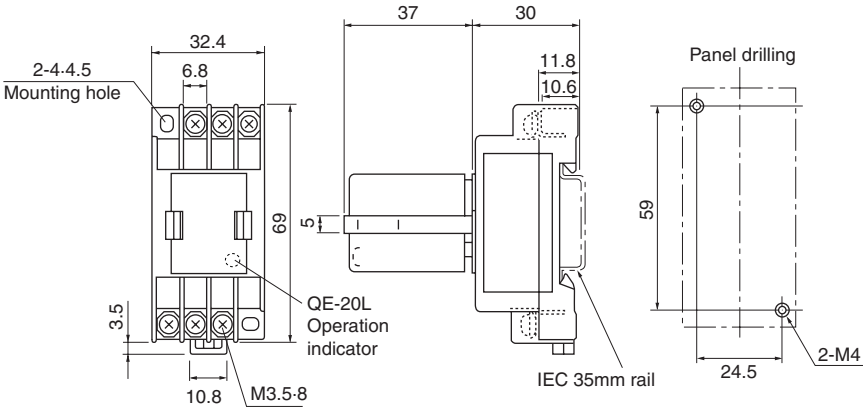

QE-40N

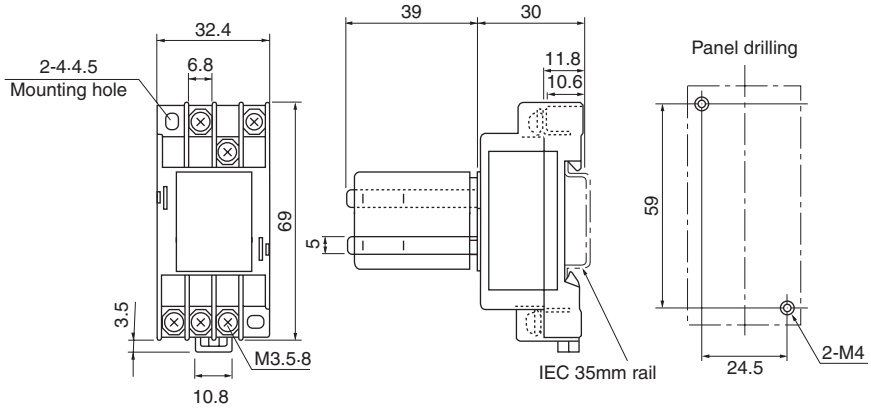

Dimensions for reference only. Confirm before construction begins.

Magnetic Motor Starters
SW series
Enclosed with pushbuttons

SW-03P to N1P was discontinued.
The replacement model is FJ-B09WP to 32WP.
Please refer to the leaflet (62C9-E-0136).

Motor starters with on-off/reset pushbuttons
Up to 110kW 440 Volts

■ Description
It is provided with on-off push-buttons. Its small size makes little demand on space. The enclosure is a general purpose type and is made of pressed steel sheet. (Plastic enclosure for SW-03P to SW-5-1P)
Compact, space-saving and easily mounted FUJI integral motor starters are highly reliable and efficient products to satisfy your application requirements. They are used with single and 3-phase squirrel-cage induction motors. Essentially consisting of a magnetic contactor and a thermal overload relay these units provide complete motor overload protection with the convenience of an outside reset button mounted on the front of the starter box.

● Contactors
FUJI integral motor starters use the SC series of contactors. All starters incorporate the usual FUJI features. These include free-floating magnetic mechanisms, bounce damping devices, long-life low-maintenance silver alloy contacts and rapid heat-dispersing arc-quenchers. Starter exceed IEC specifications as far as service life is concerned.
Choice of FUJI equipment will ensure you reduced maintenance, inspection and labor costs and uninterrupted dependable service. Available motor capacities are from 4kW to 110kW at 380 Volts.

● Thermal overload relays
Highly efficient heater elements and ambient temperature compensators give motors added protection and more uniform performance.
They are fitted with 3-pole heater elements, and resetting is carried out manually with the reset button.

■ Coil ratings:
See page 01/22.
Same as standard type starters.

KKD06-010
SW-0P/3H

■ Performance data:
- Operating cycle: 1,200 cycles per hours
- Life expectancy (operations)
  Mechanical: 250,000
  Electrical: 250,000

■ Thermal overload relay:
See page 01/98.
Same as standard type starters.

■ Ordering information
Specify the following:
1. Ordering code
2. Overload relay setting range code
3. Operating coil voltage code

■ Ratings

Max. motor capacity (kW) Single-phase 110V	3-phase 200V 240V	3-phase 380V 440V	Auxiliary contact Standard	With on-off/reset pushbutton Type	Ordering code	With on-off pushbutton Type	Ordering code	Combined thermal overload relay
0.4	2.5	4	1NO	**SW-03P/3H**	SC11PAN-■10T□D	–		TR-0N/3
0.5	3.5	5.5	1NO	**SW-0P/3H**	SC13PAN-■10T□D	–		TR-0N/3
0.5	3.5	5.5	1NO+1NC	**SW-05P/3H**	SC14PAN-■11T□D	–		TR-0N/3
0.6	4.5	7.5	1NO	**SW-4-0P/3H**	SC18PAN-■10T□D	–		TR-5-1N/3
0.8	5.5	11	1NO	**SW-4-1P/3H**	SC20PAN-■10T□D	–		TR-5-1N/3
0.8	5.5	11	1NO+1NC	**SW-5-1P/3H**	SC20PAN-■11T□D	–		TR-5-1N/3
1.2	7.5	15	2NO+2NC	**SW-N1PB/3H**	SC25BSAN-■22T□D	**SW-N1P/3H**	SC25BPAN-■22T□D	TR-N2/3
1.7	11	18.5	2NO+2NC	**SW-N2PB/3H**	SC35BSAN-■22T□D	**SW-N2P/3H**	SC35BPAN-■22T□D	TR-N2/3
–	15	22	2NO+2NC	**SW-N2SPB/3H**	SC50BSAN-■22T□D	**SW-N2SP/3H**	SC50BPAN-■22T□D	TR-N3/3
–	18.5	30	2NO+2NC	**SW-N3PB/3H**	SC65BSAN-■22T□D	**SW-N3P/3H**	SC65BPAN-■22T□D	TR-N3/3
–	22	40	2NO+2NC	**SW-N4PB/3H**	SC80BSAN-■22T□D	–		TR-N5/3
–	30	55	2NO+2NC	**SW-N5PB/3H**	SC93BSAN-■22T□D	–		TR-N5/3
–	37	60	2NO+2NC	**SW-N6PB/3H**	SC1CBSAN-■22T□D	–		TR-N6/3
–	55	90	2NO+2NC	**SW-N8PB/3H**	SC1JBSAN-■22T□D	–		TR-N8/3
–	65	110	2NO+2NC	**SW-N10PB/3H**	SC2CBSAN-■22T□D	–		TR-N10/3

Notes: 2-element is available on request.
Enter the coil voltage code in the ■ mark.
Enter the thermal overload relay ampere setting range code in the □ mark.

■ Wiring diagrams
SW-03P/3H, 0P/3H
SW-4-0P/3H, 4-1P/3H

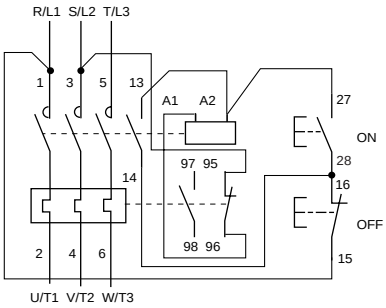

SW-05P/3H, 5-1P/3H

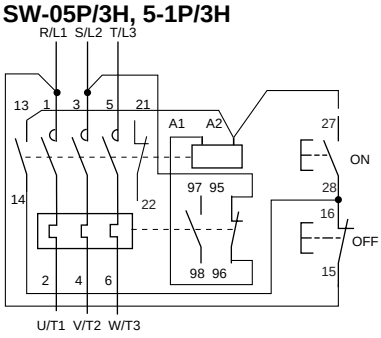

SW-N1PB/3H to N10PB/3H
SW-N1P/3H to N3P/3H

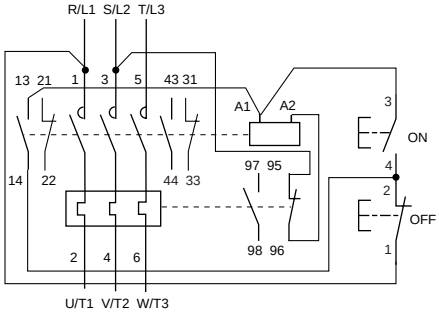

Downloaded from Arrow.com.

■ Dimensions, mm

SW-03P to SW-5-1P

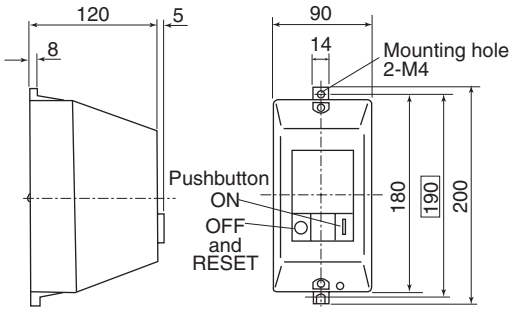

Type	Mass (kg)
SW-03P/3H	0.82
SW-0P/3H	0.82
SW-05P/3H	0.84
SW-4-0P/3H	0.86
SW-4-1P/3H	0.86
SW-5-1P/3H	0.89

Plastic enclosure

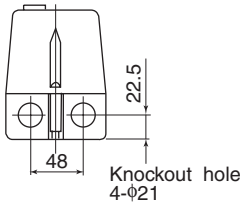

SW-N1PB to SW-N5PB
SW-N1P to SW-N3P

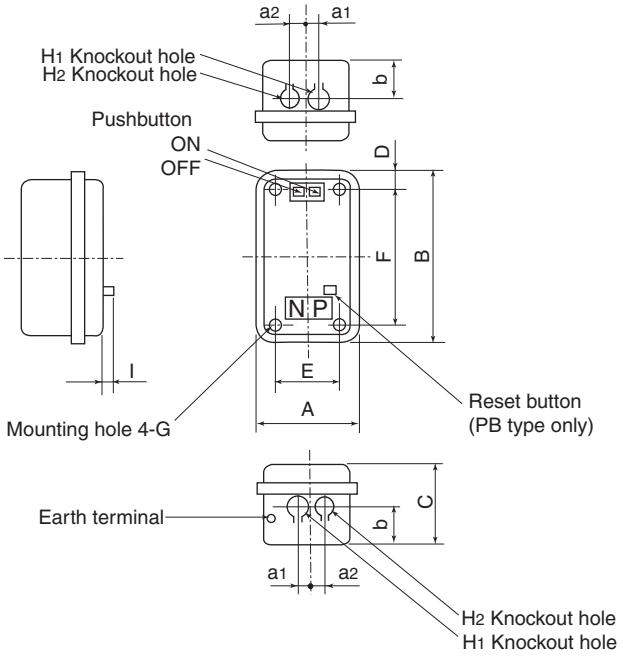

SW-N6PB to SW-N10PB

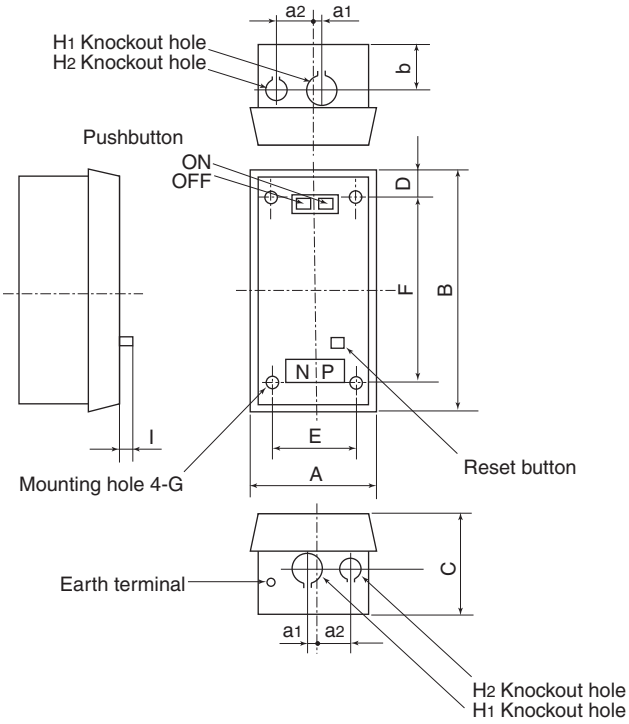

Type		A	B	C	D	E	F	G	H_1	H_2	I	a_1	a_2	b	Mass (kg) PB type	P type
SW-N1PB/3H	**N1P/3H**	175	320	145	35	110	250	M6	φ35	φ28	12	15	35	70	2.6	2.5
SW-N2PB/3H	**N2P/3H**	175	320	145	35	110	250	M6	φ35	φ28	12	15	35	70	2.6	2.5
SW-N2SPB/3H	**N2SP/3H**	175	320	145	35	110	250	M6	φ35	φ28	12	15	35	70	3.2	3.1
SW-N3PB/3H	**N3P/3H**	175	320	145	35	110	250	M6	φ35	φ28	12	15	35	70	3.2	3.1
SW-N4PB/3H		200	400	160	37	125	325	M8	φ43	φ28	12	20	40	80	4.6	–
SW-N5PB/3H		200	400	160	37	125	325	M8	φ43	φ28	12	20	40	80	5.0	–
SW-N6PB/3H		225	450	180	50	150	350	M8	φ52	φ28	12	10	70	80	8.6	–
SW-N8PB/3H		335	670	225	85	200	500	M10	φ78	φ28	11	–	100	95	18.2	–
SW-N10PB/3H		335	670	225	85	200	500	M10	φ78	φ28	11	–	100	95	19.3	–

Mass: with 3-thermal element

Dust-tight/light-corrosion resistance starters

■ Description

When selecting a motor starter the operating conditions must be carefully considered. Attention must be given to such problems as dust, chemically aggressive atmosphere, water, oil and hazardous materials.
We can supply enclosures that meet the special needs of such industries as the cement and textile industries, where dust and lint can be expected, and the fertilizer, synthetic fiber, oil refining and electrochemical and metal-plating industries where corrosive gases and materials can affect the performance of electrical equipment.
A pressed metal enclosure designed for use in locations where dust, lint, fibers and similar airborne materials are present. The hingeless-type cover is provided with a corrosion-resistant rubber gasket and it is secured by screws. Knockout holes are situated at the top and bottom of the enclosure to accept conduit hubs or glands.
This type is for indoor use.
The outside surface of the enclosure is treated with a special anti-corrosion coating. This type of case is recommended for cement and fertilizer plants and similar dusty locations. It is also suitable for oil refineries, breweries and metal-plating workshops and coastal areas where aggressive chemical conditions can be expected. This type of enclosure is not suitable for hazardous gas or hazardous dust locations.

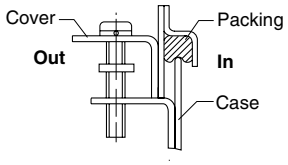

■ Ordering information

Specify the following:
1. Ordering code
2. Overload relay setting range code
3. Operating coil voltage code
4. Method of wiring works and size of conduit pipe
5. Type and density of gas

SW-N2LG/3H

■ Types and ratings:
See page 01/25.
Same as standard enclosed type.

■ Performance data:
Same as standard type.
See page 01/22.

■ Ratings of coil and auxiliary contact:
See pages 01/20, 22 and 23.

■ Thermal overload relay:
See page 01/88.

■ Application for special atmosphere

Description	Standard type	Dust-tight/light corrosion res. (lg)
Dust-tight	–	○
Moisture-proof	○	○
Drip-proof	–	–
Splashing-proof	–	○
Rain-proof	–	–
Corrosion-resistant		
Light	○	○
Medium	–	○
Hazardous locations	–	–
Gas-tight	–	–

Note: ○: Available
– : Not available

■ Dimensions, mm

SW-03LG to SW-5-1LG

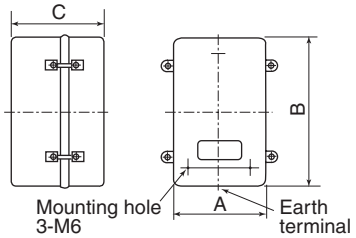

SW-N6LG to N10LG

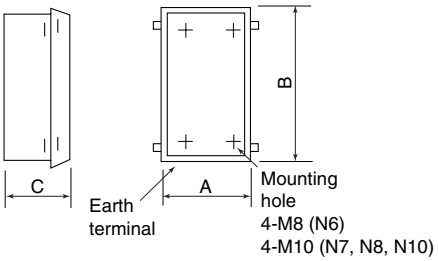

SW-N1LG to SW-N5ALG

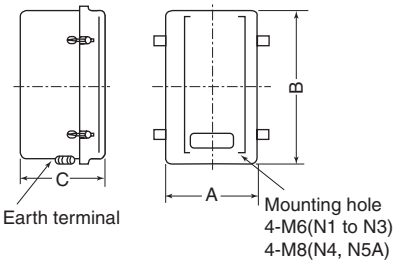

Dimensions for reference only. Confirm before construction begins.

Type	Ordering code	Aux. contact	A	B	C	Mass (kg)
SW-03LG/3H	SC11LAN-■10T□D	1NO	120	195	117	1.4
SW-0LG/3H	SC13LAN-■10T□D	1NO	120	195	117	1.4
SW-05LG/3H	SC14LAN-■11T□D	1NO + 1NC	120	195	117	1.4
SW-4-0LG/3H	SC18LAN-■10T□D	1NO	120	195	117	1.5
SW-4-1LG/3H	SC19LAN-■10T□D	1NO	120	195	117	1.5
SW-5-1LG/3H	SC20LAN-■11T□D	1NO +1NC	120	195	117	1.5
SW-N1LG/3H	SC25BLAN-■22T□D	2NO + 2NC	145	246	135	2.0
SW-N2LG/3H	SC35BLAN-■22T□D	2NO + 2NC	145	246	135	2.0
SW-N2SLG/3H	SC50BLAN-■22T□D	2NO + 2NC	175	320	145	3.1
SW-N3LG/3H	SC65BLAN-■22T□D	2NO + 2NC	175	320	145	3.1
SW-N4LG/3H	SC80BLAN-■22T□D	2NO + 2NC	200	400	160	4.5
SW-N5ALG/3H	SC93CLAN-■22T□D	2NO + 2NC	200	400	160	4.5
SW-N6LG/3H	SC1CBLAN-■22T□D	2NO + 2NC	225	450	180	8.5
SW-N7LG/3H	SC1FBLAN-■22T□D	2NO + 2NC	280	588	210	12.3
SW-N8LG/3H	SC1JBLAN-■22T□D	2NO + 2NC	335	698	225	18.1
SW-N10LG/3H	SC2CBLAN-■22T□D	2NO + 2NC	335	698	225	18.8

■: Coil voltage code □: Thermal overload relay ampere setting range code

Resistance load magnetic contactors

■ Description

These single pole contactors are for exclusively resistive load use. They are provided with large and sturdy parallel plate terminals attached to the 3-pole standard contactors to make them suitable for large current ratings. Typical applications are for industrial heating controls, PVA processing, solution vats, electric resistance furnaces, heat treatment facilities, drying kilns, farming, marine farming, lighting and similar purposes.

KK04-085

SC-4-0

+

AF88-510

SZ-SP2

■ Ordering information

Specify the following:
1. Ordering code
2. Operating coil voltage code
3. State clearly “with parallel plate terminals for attaching to contactor”.
4. Application and rated load current

■ Types and ratings

Operational current (A) 110V/220V	Auxiliary contact NO	NC	Making and breaking current	Operating cycles per hour	Life expectancy (operations) Electrical	Mechanical	Contactor Type	Ordering code	3-pole parallel terminal plate Type	Ordering code
25	1	–	1.5 × Ie	150	500,000	10 millions	**SC-03**	SC11AA-■10	**SZ-SP1**	SZ1SP1
30	1	–	1.5 × Ie	150	500,000	10 millions	**SC-0**	SC13AA-■10	**SZ-SP1**	SZ1SP1
30	1	1	1.5 × Ie	150	500,000	10 millions	**SC-05**	SC14AA-■11	**SZ-SP1**	SZ1SP1
40	1	–	1.5 × Ie	150	500,000	10 millions	**SC-4-0**	SC18AA-■10	**SZ-SP2**	SZ1SP2
50	1	–	1.5 × Ie	150	500,000	10 millions	**SC-4-1**	SC19AA-■10	**SZ-SP2**	SZ1SP2
50	1	1	1.5 × Ie	150	500,000	10 millions	**SC-5-1**	SC20AA-■11	**SZ-SP2**	SZ1SP2
50	2	2	1.5 × Ie	150	500,000	10 millions	**SC-5-1**	SC20AA-■22	**SZ-SP2**	SZ1SP2
100	2	2	1.5 × Ie	150	500,000	5 millions	**SC-N1**	SC25BAA-■22	**SZ-SP3**	SZ2SP3
125	2	2	1.5 × Ie	150	500,000	5 millions	**SC-N2**	SC35BAA-■22	**SZ-SP3**	SZ2SP3
200	2	2	1.5 × Ie	150	250,000	5 millions	**SC-N2S**	SC50BAA-■22	**SZ-SP4**	SZ2SP4
250	2	2	1.5 × Ie	150	250,000	5 millions	**SC-N3**	SC65BAA-■22	**SZ-SP4**	SZ2SP4
315	2	2	1.5 × Ie	150	250,000	5 millions	**SC-N4**	SC80BAA-■22	**SZ-SP5**	SZ2SP5
400	2	2	1.5 × Ie	150	250,000	5 millions	**SC-N5A**	SC93CAA-■22	**SZ-SP5**	SZ2SP5
400	2	2	1.5 × Ie	150	250,000	5 millions	**SC-N6**	SC1CBAA-■22	**SZ-SP6**	SZ2SP6
500	2	2	1.5 × Ie	150	250,000	5 millions	**SC-N7**	SC1FBAA-■22	**SZ-SP7**	SZ2SP7
630	2	2	1.5 × Ie	150	250,000	5 millions	**SC-N8**	SC1JBAA-■22	**SZ-SP8**	SZ2SP8
710	2	2	1.5 × Ie	150	250,000	5 millions	**SC-N10**	SC2ABAA-■22	**SZ-SP8**	SZ2SP8
900	2	2	1.5 × Ie	150	250,000	5 millions	**SC-N11**	SC3ABAA-■22	**SZ-SP9**	SZ2SP9
1000	2	2	1.5 × Ie	150	250,000	5 millions	**SC-N12**	SC4ABAA-■22	**SZ-SP9**	SZ2SP9
1600	2	2	1.5 × Ie	150	250,000	5 millions	**SC-N14**	SC6ABAA-■22	**SZ-SP10**	SZ2SP10
2100	2	2	1.5 × Ie	150	100,000	2,500,000	**SC-N16**	SC8ABAA-■22	**SZ-SP11**	SZ2SP11

Notes: 1. ■: Coil voltage code, see page 01/27
2. Ie: Rated operational current. Conforming to Class AC-1, IEC60947-4-1.

■ Dimensions, mm

SC-03 + SZ-SP1 to SC-5-1 + SZ-SP2

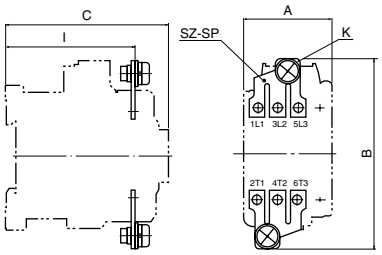

Type		A	B	C	I	K	Mass (g) *
SC-03+SZ-SP1		43	90	80	63	M6	25
SC-0+SZ-SP1		43	90	80	63	M6	25
SC-05+SZ-SP1		53	90	80	63	M6	25
SC-4-0+SZ-SP2		53	100	81	63	M6	35
SC-4-1+SZ-SP2		53	100	81	63	M6	35
SC-5-1+SZ-SP2	1NO•1NC	64	100	81	63	M6	35
	2NO•2NC	64	100	109	63	M6	35
SC-N1, N2+SZ-SP3		74	132	96	64	M8	110
SC-N2S, N3+SZ-SP4		88	174	111	75.5	M10	200
SC-N4+SZ-SP4		88	215	117	77	M12	320

SC-N1+SZ-SP3 to SC-N16+SZ-SP11

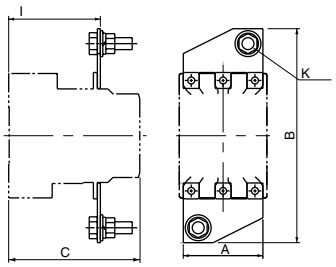

Type	A	B	C	I	K	Mass (g) *
SC-N5A+SZ-SP4	88	215	132	92	M12	320
SC-N6+SZ-SP6	100	300	138	98	M12×2	760
SC-N7+SZ-SP7	115	312	140	98	M12×2	800
SC-N8, N10+SZ-SP8	138	371	174	120	M12×2	1300
SC-N11, N12+SZ-SP9	153	420	195	135	M12×4	3000
SC-N14+SZ-SP10	290	525	328	246	M12×4	4400
SC-N16+SZ-SP11	290	525	328	246	M12×4	5900

*Mass: 3-pole parallel terminal plate only

Magnetic contactors with single button auxiliary contact

■ Description

The SC-03H to N12H contactors are improved versions of the standard SC-03 to SC-N12 contactors.
The improvement consists of changing the auxiliary contact from a bifurcated to a single button type contact. This change increases the auxiliary contact rating.
The specifications, including the main contact rating and the expected electrical service life, are similar to that of the SC-03 to N12 types.
The options for the SC series, such as the coil surge suppressor and mechanical interlock can also be used.

■ Type number nomenclature

SC-□-H

- **With single button auxiliary contact**
- **Frame size**
  03, 0, 05, 4-0, 4-1, 5-1, N1, N2, N2S, N3, N4, N5A, N6, N7, N8, N10, N11, N12
- **Basic type**
  SC: Magnetic contactor

■ Performance data

Same as standard types

■ Ordering information

Specify the following:
1. Ordering code
2. Operating coil voltage code
3. Auxiliary contact arrangement code.

SC-0H KKD06-036

■ Coil voltage

Same as standard type, *See page 01/22*

■ Ratings (Conforming to AC-3, IEC 60947-4-1)

Type	Ordering code	Max. motor capacity (kW) 3-phase 200V 240V	380V 440V	500V 550V	600V 660V	Rated operational current (A) 3-phase 200V 240V	380V 440V	500V 550V	600V 660V	Rated thermal current (A)	Auxiliary contact Standard
SC-03H	SC11AH-■10	2.5	4	4	4	11	9	7	5	20	1NO
SC-0H	SC13AH-■10	3.5	5.5	5.5	5.5	13	12	9	7	20	1NO
SC-05H	SC14AH-■11	3.5	5.5	5.5	5.5	13	12	9	7	20	1NO+1NC
SC-4-0H	SC18AH-■10	4.5	7.5	7.5	7.5	18	16	13	9	25	1NO
SC-4-1H	SC19AH-■10	5.5	11	11	7.5	22	22	17	9	32	1NO
SC-5-1H	SC20AH-■11	5.5	11	11	7.5	22	22	17	9	32	1NO+1NC
SC-5-1H	SC20AH-■22	5.5	11	11	7.5	22	22	17	9	32	2NO+2NC *
SC-N1H	SC25BAH-■11	7.5	15	15	11	32	32	24	15	50	2NO+2NC
SC-N2H	SC35BAH-■11	11	18.5	18.5	15	40	40	29	19	60	2NO+2NC
SC-N2SH	SC50BAH-■11	15	22	25	22	50	50	38	26	80	2NO+2NC
SC-N3H	SC65BAH-■11	18.5	30	37	30	65	65	60	38	100	2NO+2NC
SC-N4H	SC80BAH-■11	22	40	37	37	80	80	60	44	135	2NO+2NC
SC-N5AH	SC93CAH-■11	30	55	55	55	105	105	85	64	150	2NO+2NC
SC-N6H	SC1CBAH-■11	37	60	60	60	125	125	90	72	150	2NO+2NC
SC-N7H	SC1FBAH-■11	45	75	75	90	150	150	120	103	200	2NO+2NC
SC-N8H	SC1JBAH-■11	55	90	130	132	180	180	180	150	260	2NO+2NC
SC-N10H	SC2CBAH-■11	65	110	132	132	220	220	200	150	260	2NO+2NC
SC-N11H	SC3ABAH-■11	90	160	160	200	300	300	230	230	350	2NO+2NC
SC-N12H	SC4ABAH-■22	120	220	250	300	400	400	360	360	360	2NO+2NC

Notes: Enter the coil voltage code in the ■ mark
* With auxiliary contact block SZ-A11 (1NO+1NC)

■ Auxiliary contact ratings (Conforming to IEC 60947-5-1)

Type	Continuous current (A)	Make/break current (AC, A)	Rated operational current (A) AC Voltage (V)	AC-15 (Ind. load)	AC-12 (Res. load)	DC Voltage (V)	DC-13 (Ind. load)	DC-12 (Res. load)
SC-03H to SC5-1H	10	60	100–120 200–240	6	10	24 48	5 1.5	10 5
		40	380–440 500–550	4	10	110 220	0.7 0.27	4 1
SC-N1H to SC-N12H	10	60	100–120 200–240	6	10	24 48	10 3	10 5
		40	380–440	4	10	110	1.5	2.5
		25	500–600	2.5	10	220	0.5	1

Contactors and starters with quick connection terminals

■ Feature

- Easy wiring
  Wiring time is at least 50% shorter than previous type.
- Safety
  The finger protection feature protects the charging current part during maintenance and check (complying with EN60947-4-1, and IEC60947-4-1)
- International use
  The product and terminal structure comply with international safety standards.
  It complies with VGB4, DIN57106, VDE0106, and VDE Teil 100 which are recommendation for preventing the exposure of charging current part.

Quick connection terminal

- When one crimp terminal is used

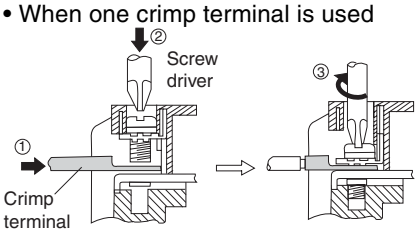

- When two crimp terminals are used

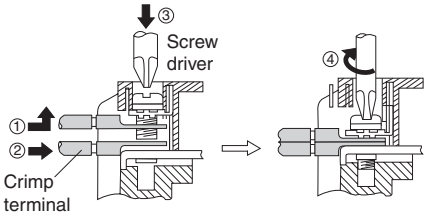

AF95-240

SW-0Y/3H

■ Types and rating

Max. motor capacity (kW) 3-phase AC-3 200V 240V	380V 440V	Rated operational corrent (A) 3-phase motor AC-3 200V 240V	380V 440V	Resistive load AC-1 200V 240V	380V 440V	Rated thermal current (A)	Auxiliary contact arrangement	Contactor Type	Starter 3-element Type
2.5	4	11	9	20	20	20	1NO 1NC	**SC-03Y10** **SC-03Y01**	**SW-03Y/3H10** **SW-03Y/3H01**
3.5	5.5	13	12	20	20	20	1NO 1NC	**SC-0Y10** **SC-0Y01**	**SW-0Y/3H10** **SW-0Y/3H01**
3.5	5.5	13	12	20	20	20	2NO 1NO,1NC 2NC	**SC-05Y20** **SC-05Y11** **SC-05Y02**	**SW-05Y/3H20** **SW-05Y/3H11** **SW-05Y/3H02**
5.5	11	22	22	32	32	32	2NO 1NO,1NC 2NC	**SC-5-1Y20** **SC-5-1Y11** **SC-5-1Y02**	**SW-5-1Y/3H20** **SW-5-1Y/3H11** **SW-5-1Y/3H02**

■ Ordering information

Specify the following:
1. Type number
2. Coil voltage (Contactor only)
3. Main circuit voltage (Starter only)
4. Thermal overload setting range code (Starter only)

See page 01/19.

■ Dimensions and panel drilling

Same as the standard types

■ Mass

Same as the standard types

■ Optional unit

Auxilliary contact blocks with quick connection terminals

Mounting	Thermal current (A)	Contact arrangement	Type
Front mounting	10	4NO 3NO+1NC 2NO+2NC 2NO 1NO+1NC 2NO	**SZ-A40Y** **SZ-A31Y** **SZ-A22Y** **SZ-A20Y** **SZ-A11Y** **SZ-A02Y**

AF95-246

SZ-A40Y, A31Y, A22Y

● Dimensions and contact arrangement diagrams

Same as the standard type auxiliary contact blocks.

See page 01/69.

■ Optional unit

Optional unit	Description	Type	Used with	Further information
Auxiliary contact block	**Front mounting** (Bifurcated)			*Page 01/69*
	4NO	**SZ-A40**	SC-03 to N3	
	3NO+1NC	**SZ-A31**		
	2NO+2NC	**SZ-A22**		
	2NO	**SZ-A20**		
	1NO+1NC	**SZ-A11**		
	2NC	**SZ-A02**		
	2NO+2NC (Overlapping)	**SZ-A222**		
	1NO+1NC (Overlapping)	**SZ-A111**		
	Front mounting (Single button)			
	4NO	**SZ-A40H**	SC-03 to N3	
	3NO+1NC	**SZ-A31H**		
	2NO+2NC	**SZ-A22H**		
	Side mounting(Bifurcated)			
	1NO+1NC	**SZ-AS1**	SC-03 to N3	
	Side mounting(Single button)			
	1NO+1NC	**SZ-AS2**	SC-N4 to N12	
	1NO+1NC	**SZ-AS1H**	SC-03 to N3	
	1NO+1NC	**SZ-AS2H**	SC-N4 to N12	
	1NO+1NC	**SZ-AS3H**	SC-N14, N16	
Auxiliary contact block with quick connection terminals	4NO	**SZ-A40Y**	SC-03Y, 0Y, 05Y, 5-1Y	*Page 01/65*
	3NO+1NC	**SZ-A31Y**		
	2NO+2NC	**SZ-A22Y**		
	2NO	**SZ-A20Y**		
	1NO+1NC	**SZ-A11Y**		
	2NC	**SZ-A02Y**		
Operation counter unit	**Without alarm contact**	**SZ-J**	SC-03 to N3	*Page 01/74*
	With alarm contact			
	At 1 million operations	**SZ-J1**	SC-03 to 5-1	
	At 2 million operations	**SZ-J2**		
	At 3 million operations	**SZ-J3**		
	At 4 million operations	**SZ-J4**		
	At 5 million operations	**SZ-J5**		
	At 6 million operations	**SZ-J6**		
	At 7 million operations	**SZ-J7**		
	At 8 million operations	**SZ-J8**		
Main circuit surge suppression unit	**Front mounting**	**SZ-ZM1**	SC-03 to 5-1	*Page 01/72*
		SZ-ZM3	SC-N1 to N3	
	Side mounting	**SZ-ZM2**	SC-03 to 5-1	
		SZ-ZM4	SC-N1 to N3	
Mechanical interlock unit		**SZ-RM**	SC-03 to N3	*Page 01/73*
Power connection kit for reversing		**SZ-RW1**	SC-03, 0	*Page 01/73*
		SZ-RW2	SC-05	
		SZ-RW3	SC-4-0, 4-1	
		SZ-RW4	SC-5-1	
		SZ-RW5	SC-N1, N2	
		SZ-RW6	SC-N2S, N3	
Coil drive unit for IC output	**Relay type**			*Page 01/70*
	Top mounting	**SZ-CD1**	SC-03 to 5-1	
		SZ-CD3	SC-N1 to N3	
	Left-side mounting	**SZ-CD5**	SC-N4 to N12	
	SSR type			
	Top mounting	**SZ-03/CD2-24**	SC-03 to 5-1	
		SZ-CD4	SC-N1 to N3	
	Left-side mounting	**SZ-CD6A**	SC-N4 to N12	
3-pole parallel plate terminal	(2 pcs/set)	**SZ-SP1**	SC-03, 0, 05	*Page 01/63*
		SZ-SP2	SC-4-0, 4-1, 5-1	
		SZ-SP3	SC-N1, N2	
		SZ-SP4	SC-N2S, N3	
		SZ-SP5	SC-N4, N5A	

Discontinued

Optional unit	Description	Type	Used with	Further information
3-pole parallel plate terminal	(2pcs/set)	**SZ-SP6** **SZ-SP7** **SZ-SP8** **SZ-SP9** **SZ-SP10** **SZ-SP11**	SC-N6 SC-N7 SC-N8, N10 SC-N11, N12 SC-N14 SC-N16	*Page 01/63*
Coil surge suppression unit	**Varistor**			*Page 01/71*
	24 to 48V AC/DC	**SZ-Z1**	SC-03 to 5-1, SC03/G to 5-1/G	
	100 to 250V AC/DC	**SZ-Z2**	SC-03 to 5-1, SC-03/G to 5-1/G	
	380 to 440V AC	**SZ-Z3**	SC-03 to 5-1	
	24 to 48V AC/DC(with LED)	**SZ-Z6**	SC-03 to 5-1, SC-03/G to 5-1/G	
	100 to 250V AC/DC(with LED)	**SZ-Z7**	SC-03 to 5-1, SC-03/G to 5-1/G	
	24 to 48V AC/DC	**SZ-Z31**	SC-N1 to N3, SC-N1/G to N3/G	
	100 to 250V AC/DC	**SZ-Z32**	SC-N1 to N3, SC-N1/G to N3/G	
	380 to 440V AC	**SZ-Z33**	SC-N1 to N3	
	24 to 48V AC/DC	**SZ-Z41**	SC-N4, N5A, SC-N4/G, N5/G	
	100 to 250V AC/DC	**SZ-Z42**	SC-N4, N5A, SC-N4/G, N5/G	
	380 to 440V AC	**SZ-Z43**	SC-N4, N5A	
	CR			
	24 to 48V AC/DC	**SZ-Z4**	SC-03 to 5-1, SC-03/G to 5-1/G	
	100 to 250V AC/DC	**SZ-Z5**	SC-03 to 5-1, SC-03/G to 5-1/G	
	24 to 48V AC/DC(with LED)	**SZ-Z8**	SC-03 to 5-1, SC-03/G to 5-1/G	
	100 to 250V AC/DC(with LED)	**SZ-Z9**	SC-03 to 5-1, SC-03/G to 5-1/G	
	24 to 48V AC	**SZ-Z34**	SC-N1 to N3	
	100 to 250V AC	**SZ-Z35**	SC-N1 to N3	
	24 to 48V DC	**SZ-Z36**	SC-N1/G to N3/G	
	100 to 250V DC	**SZ-Z37**	SC-N1/G to N3/G	
	24 to 48VAC	**SZ-Z44**	SC-N4, N5A	
	100 to 250V AC	**SZ-Z45**	SC-N4, N5A	
	24 to 48V DC	**SZ-Z46**	SC-N4/G, N5/G	
Fault detector unit	SPDT 100 to 120V AC SPDT 200 to 240V AC	**SY-F-A3/M** **SY-F-A4/M**	SC-03 to N16	*Contact FUJI*
Contact transfer protector	100 to 127V AC 200 to 250V AC	**SZ-RC1** **SZ-RC2**	SC-03 to N16	*Contact FUJI*
Terminal cover	**For contactor**	**SZ-T1** **SZ-T2** **SZ-T3** **SZ-T4** **SZ-T22** **SZ-T23**	SC-03, 0 SC-05 SC-4-0, 4-1 SC-5-1 SC-N1, N2 SC-N2S, N3	*Page 01/75*
	For contactor	**SZ-N4T** **SZ-N6T** **SZ-N7T** **SZ-N8T** **SZ-N11T**	SC-N4, N5A SC-N6 SC-N7 SC-N8, N10 SC-N11, N12	
	For starter	**SZ-N4T, SZ-WN4T** **SZ-N6T, SZ-WN6T** **SZ-N7T, SZ-WN7T** **SZ-N8T, SZ-WN8T** **SZ-N8T, SZ-WN10T** **SZ-N11T, SZ-WN11T**	SW-N4/3H, N5A/3H SW-N6/3H SW-N7/3H SW-N8/3H SW-N10/3H SW-N11/3H, N12/3H	
	For reversing contactor	**SZ-N4RT1, T2** **SZ-N6RT1, T2** **SZ-N7RT1, T2** **SZ-N8RT1, T2** **SZ-N11RT1, T2**	SW-N4RM, N5ARM SW-N6RM SW-N7RM SW-N8RM, N10RM SW-N11RM, N12RM	

Discontinued

Optional unit	Description	Type	Used with	Further information
Terminal cover	**For thermal overload relay**	**SZ-T10**	SZ-HB	*Page 01/75*
		SZ-T11	SZ-HC	
		SZ-T12	TR-0N/3, TK-0N	
		SZ-T13	TR-5-1N/3, TK-5-1N	
		SZ-T14	TR-N2H/3, TK-N2H	
		SZ-T15	TR-N3H/3, TK-N3H	
		SZ-RN6T	TR-N6H/3, TKN6H	
		SZ-T16	TR-N2/3, TK-N2	
		SZ-T17	TR-N3/3, TK-N3	
	For auxiliary contact block			
	For 4-pole front mount	**SZ-T5**	SZ-A40, A31, A22, A222	
	For 2-pole front mount	**SZ-T6**	SZ-A20, A11, A02, A111	
	For 1-pole front mount	**SZ-T7**	SZ-AS1, AS2	
Insulation barrier	**For contactor**	**SZ-B1**	SC(SW)-N4 to N7, TR(TK)-N6H	*Page 01/76*
		SZ-B2	SC(SW)-N8 to N12, TR(TK)N10H/3 to N12H/3	
Off-delay release unit	100V AC 50/60Hz	**SZ-DE100**	SC-03/G to 5-1/G	*Page 01/46*
	110V AC 50/60Hz	**SZ-DE110**		
	200V AC 50/60Hz	**SZ-DE200**		
	220V AC 50/60Hz	**SZ-DE220**		
	100-110V AC, 50/60Hz	**SZ-N1/GDE**	SC-N1/G, N2/G	
		SZ-N2S/GDE	SC-N2S/G, N3/G	
		SZ-N5/DE	SC-N4/SE, N5	
		SZ-N6/DE	SC-N6, N7	
		SZ-N8/DE	SC-N8, N10	
		SZ-N11/DE	SC-N11, N12	
		SZ-N14/DE	SC-N14	
	200-220V AC, 50/60Hz	**SZ-N1/GDE**	SC-N1/G, N2/G	
		SZ-N2S/GDE	SC-N2S/G, N3/G	
		SZ-N5/DE	SC-N4/SE, N5	
		SZ-N6/DE	SC-N6, N7	
		SZ-N8/DE	SC-N8, N10	
		SZ-N11/DE	SC-N11, N12	
Live-section cover	**For contactor**	**SZ-JC1**	SC-03, 0	*Page 01/77*
		SZ-JC2	SC-05	
		SZ-JC3	SC-4-0, 4-1	
		SZ-JC4	SC-5-1	
		SZ-N1J	SC-N1, N2	
		SZ-N2SJ	SC-N2S, N3	
		SZ-N4J	SC-N4, N5A	
		SZ-N6J	SC-N6	
		SZ-N7J	SC-N7	
		SZ-N8J	SC-N8, N10	
		SZ-N11J	SC-N11, N12	
	For starter	**SZ-JW1**	SW-03/3H, 0/3H	
		SZ-JW2	SW-05/3H	
		SZ-JW3	SW-4-0/3H, 4-1/3H	
		SZ-JW4	SW-5-1/3H	
		SZ-WN1J	SW-N1/3H, N2/3H	
		SZ-WN2SJ	SW-N2S/3H, N3/3H	
		SZ-WN4J	SW-N4/3H, N5A/3H	
		SZ-WN6J	SW-N6/3H	
		SZ-WN7J	SW-N7/3H	
		SZ-WN8J	SW-N8/3H	
		SZ-WN10J	SW-N10/3H	
		SZ-WN11J	SW-N11/3H, N12/3H	
	For reversing starter	**SZ-WN4RJ**	SW-N4RM, N5ARM	
		SZ-WN6RJ	SW-N6RM	
		SZ-WN7RJ	SW-N7RM	
		SZ-WN8RJ	SW-N8RM	
		SZ-WN10RJ	SW-N10RM	
		SZ-WN11RJ	SW-N11RM, N12RM	

Auxiliary contact blocks SZ-A

■ Features

- Easy attaching of auxiliary contact block
  This contact block can be attached to magnetic motor starter and contactor with a snap-on fitting. Auxiliary contacts can be added easily at site. When a front mounting block is used, there is no need to enlarge contactor installation space. This helps to make the control panel smaller.
- Bifurcated contact is standard
  High reliable bifurcated contact makes it possible to input directly to electronic control circuits like programmable logic controllers.
- Auxiliary contact block with single button contacts is also available.
- Terminal number conforms to IEC standard

■ Standards

Except overlap and single button contact type

■ Performance

Operating frequency: 1800 times/hour
Mechanical durability: 10 million operations
Electrical durability:
500,000 operations (at 220V AC-15)

Type	Contact arrangement
Front mounting	
SZ-A40, A40H	4NO
SZ-A31, A31H	3NO+1NC
SZ-A22, A22H	2NO+2NC
SZ-A20	2NO
SZ-A11	1NO+1NC
SZ-A02	2NC
SZ-A111	1NO+1NC (Overlapping)
SZ-A222	2NO+2NC (Overlapping)
Side mounting	
SZ-AS1, AS1H	1NO+1NC
SZ-AS2, AS2H	1NO+1NC
SZ-AS3H	1NO+1NC

■ Caution on use

1. Front mounting auxiliary contact block and side mounting block cannot be attached to one contactor at the same time.
2. Only one front mounting block can be attached to one contactor.
3. Where mechanical latch unit is already attached, only side mounting auxiliary contact block can be attached.
4. Where interlock unit is already attached, side mounting auxiliary contact block can be attached on one side only.

KKD06-013

SZ-A22

KKD05-276

SZ-A11

AF00-258

SZ-AS1

■ Ratings

Type	Thermal current (A)	Make/break current (A)	Rated operational current (A)*2 AC Voltage	Ind. load (AC-15)	Res. load (AC-12)	Minimum voltage/ current
SZ-A□	10	60 (60)	110V	6 (6)	10 (10)	5V DC
SZ-AS1		30 (60)	220V	3 (6)	8 (10)	3 mA
SZ-AS2		15 (40)	440V	1.5 (4)	5 (10)	(24 V DC
SZ-A□H		12 (25)	550V	1.2 (2.5)	5 (10)	10mA)
SZ-AS1H						
SZ-AS2H						
SZ-AS3H						

Note: *1 Enter the contact arrangement code in the □ mark.
*2 DC ratings: Same as the auxiliary contact ratings of standard type contactors or contactors with single button contacts.
• ( ): In case of SZ-A□H (single button contact)

■ Dimensions, mm

SZ-A40, A40H, A31, A31H, A22, A22H, A222
SZ-A20, A11, A02, A111

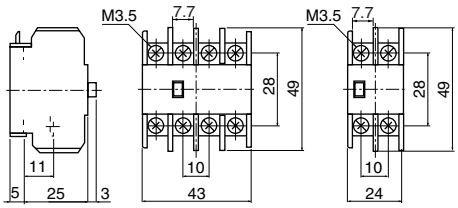

Mass: 36g Mass: 20g

SZ-AS3H

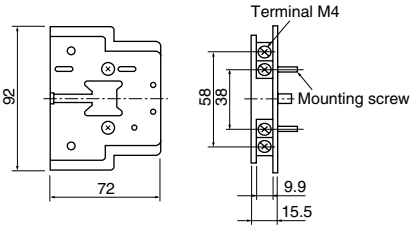

Mass: 75g

SZ-AS1, AS1H

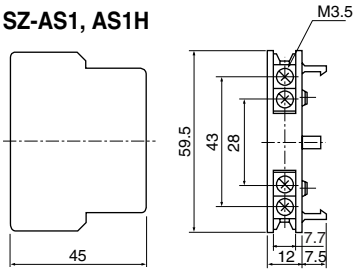

Mass: 28kg

SZ-AS2, AS2H

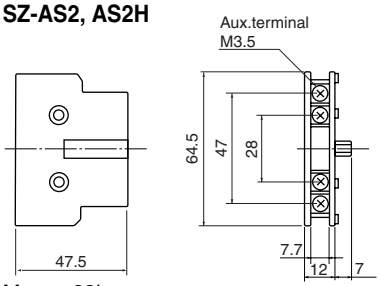

Mass: 33kg

■ Contact arrangement

SZ-A40, A40H
4NO
53 63 73 83
54 64 74 84

SZ-A20
2NO
53 63
54 64

SZ-AS1,AS2, AS1H, AS2H, AS3H
1NO+1NC
53 61
54 62
In cace of left side mounting

SZ-A31, A31H
3NO+1NC
53 61 73 83
54 62 74 84

SZ-A11
1NO+1NC
53 61
54 62

SZ-A22, A22H
2NO+2NC
53 61 71 83
54 62 72 84

SZ-A02
2NC
51 61
52 62

SZ-AS1,AS2,AS1H AS2H, AS3H
1NO+1NC
71 83
72 84

SZ-A222
2NO+2NC
57 65 75 87
58 66 76 88

SZ-A111
1NO+1NC
57 65
58 66

In cace of right side mounting

Downloaded from Arrow.com.

Coil drive units for IC output SZ-CD

This unit is designed to carry out ON-OFF control for contactors with output (24V DC) from the electronic controller. It can be attached to a side or top of a contactor, thus saving on installation space.

SZ-CD1

■ Features

- This unit operates at, 24V DC.
- Module type allows easy attachment and removal.
- SZ-CD5 and -CD6 can be installed individually and rail mounted.
- Surge suppression function (except SZ-CD5)
- This unit has a built-in surge suppression device (varistor) to protect electronic equipment from surges which occur when the coil is de-energized.

Type		Used with
SZ-CD1 **SZ-CD3** **SZ-CD5**	With relay output	SC-03 to 5-1 SC-N1 to N3 SC-N4 to N12
SZ-03/CD2-24 **SZ-CD4** **SZ-CD6**	With SSR output	SC-03 to 5-1 SC-N1 to N3 SC-N4to N12

■ Specifications

Description		SZ-CD1	SZ-CD3, CD5	SZ-03/CD2-24,CD4,CD6
Coil	Rated voltage	24V DC	24V DC	24V DC
	Pick-up voltage (at 20°C)	85% or less of rated voltage	85% or less of rated voltage	70% or less of rated voltage
	Drop-out voltage (at 20°C)	Over 5% of rated voltage	Over 5% of rated voltage	Over 5% of rated voltage
	Max. allowable voltage	130% or less of rated voltage	130% or less of rated voltage	110% or less of rated voltage
	Power consumption	0.2W(8.3mA)	0.2W(8.3mA)	0.36W(15mA)
Contact	Output device	Relay output	Relay output	SSR output
	Max. make/break voltage	250V AC, 110V DC	250V AC	100-240V AC
	Operating time(ms)	2-5	2-5(SZ-CD5: 3-6)	1 or less

■ Dimensions, mm

SZ-CD1,03/CD2-24 (Top mount)

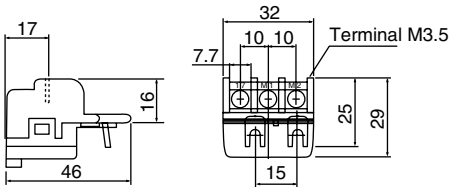

Mass: 26g

SZ-CD3,CD4 (Top mount)

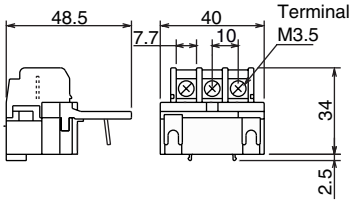

Mass: 28g

SZ-CD5,CD6 (Side mount)

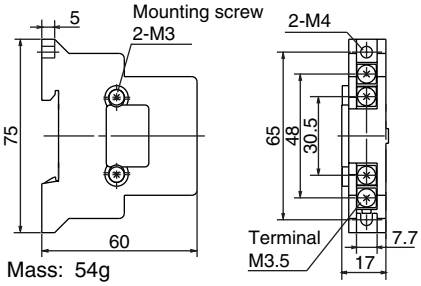

Mass: 54g

■ Wiring diagrams

SZ-CD1 **SZ-03/CD2-24**

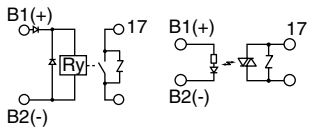

SZ-CD3 **SZ-CD4**

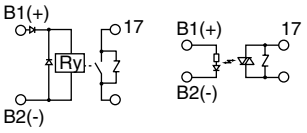

SZ-CD5 **SZ-CD6**

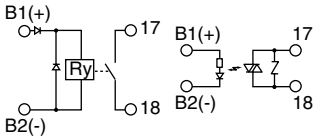

Downloaded from Arrow.com.

Coil surge suppression units SZ-Z

■ Description

This unit suppresses coil surge voltage due to contactor ON-OFF operations. This unit can be easily connected to contactor coil terminals.
Varistor types cut the peak value of surge voltages and CR types suppress rapid increases of surge voltage.
Standard type contactors SC-N6 to N16 are provided with surge suppression devices.

KKD06-021

SZ-Z4

Coil surge suppression unit (for SC-03 to 5-1, SC-N1 to N5A)

Type	Device	Coil voltage	Used with
SZ-Z1 **SZ-Z2** **SZ-Z3**	Varistor Varistor Varistor	24–48V AC/DC 100–250V AC/DC 380–440V AC	SC-03 to 5-1 SC-03/G to 5-1/G
SZ-Z4 **SZ-Z5**	CR CR	24–48V AC/DC 100–250V AC/DC	
SZ-Z6 * **SZ-Z7** *	Varistor Varistor	24–48V AC/DC 100–250V AC/DC	
SZ-Z8 * **SZ-Z9** *	CR CR	24–48V AC/DC 100–250V AC/DC	
SZ-Z31 **SZ-Z32**	Varistor Varistor	24–48V AC/DC 100–250V AC/DC	SC-N1 to N3 SC-N1/G to N3/G
SZ-Z33	Varistor	380–440V AC	SC-N1 to N3
SZ-Z34 **SZ-Z35**	CR CR	24–48V AC 100–250V AC	SC-N1 to N3
SZ-Z36 **SZ-Z37**	CR CR	24–48V DC 100–250V DC	SC-N1/G to N3/G
SZ-Z41 **SZ-Z42**	Varistor Varistor	24–48V AC/DC 100–250V AC/DC	SC-N4, N5A SC-N4/G, N5/G
SZ-Z43 **SZ-Z44** **SZ-Z45**	Varistor CR CR	380–440V AC 24–48V AC 100–250V AC	SC-N4, N5A
SZ-Z46	CR	24–48V DC	SC-N4/G, N5/G

Note: * With LED operating indicator

■ Dimensions, mm

SZ-Z1 to Z5
SZ-Z24, Z25

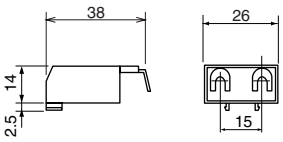

Mass: 14g

SZ-Z6 to Z9

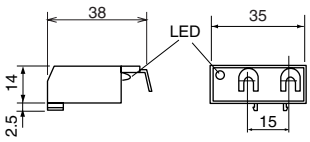

Mass: 16g

SZ-Z31 to Z37

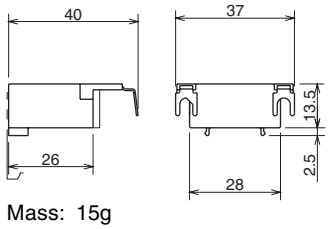

Mass: 15g

SZ-Z41 to Z46

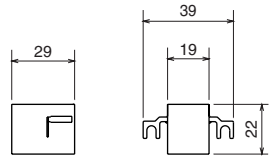

Mass: 15g

■ Characteristics(coil rated 200V AC)

● Without coil surge suppression unit

When current through a coil is interrupted, the sudden change of coil current, induces an abrupt surge voltage due to the coil inductance. The surge voltage sometimes produces noise which can damage or cause adjacent electronic devices to malfunction.

SC-0 (0.1msec/div, 1000V/div)
200V AC coil

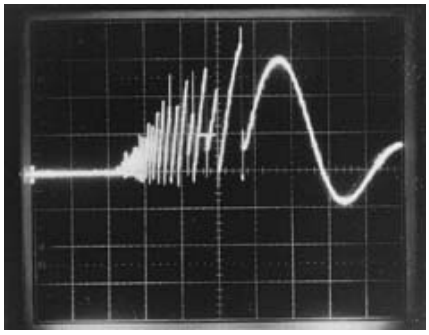

CP-487

● With coil surge suppression unit Varistor type

A surge voltage that exceeds a certain value causes a current to flow through the varistor connected in parallel with the coil, thereby suppressing peaks of the surge voltage. This surge suppression unit can be used in both AC and DC circuits.

SC-0+SZ-Z2 (2msec/div, 200V/div)
200V AC coil

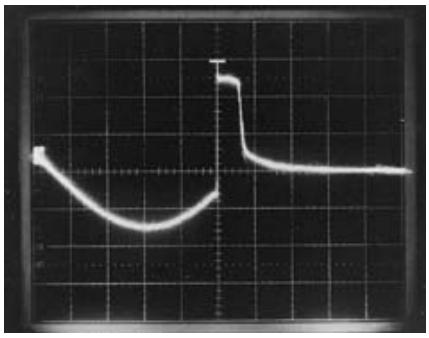

CP-489

● With coil surge suppression unit CR type

A CR (Capacitor-resistor) circuit connected in parallel with the coil suppresses the abrupt increase of surge voltage (dv/dt characteristics) by lowering the surge voltage oscillation frequency.
This surge suppression unit can be used in both AC and DC circuits.

SC-0+SZ-Z5 (2msec/div, 200V/div)
200V AC coil

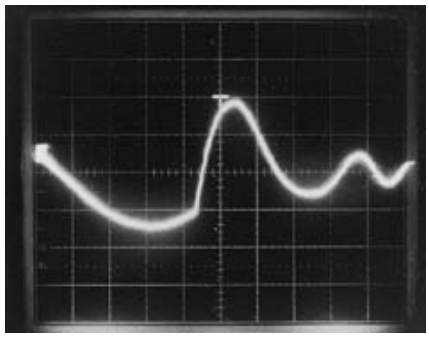

CP-488

Downloaded from Arrow.com.

Main circuit surge suppression units SZ-ZM

■ Description

This unit consists of delta connected capacitor (C) and resistor (R).
When contactor is energized or de-energized, a surge voltage is generated from motor circuit. This unit suppresses this surge voltage and protects electronic equipment from malfunction or damage.
Space saving, front mounting type (SZ-ZM1) and side mounting type (SZ-ZM2), which allows simultaneous use of other front mounting optional unit.

Type	Mounting	Voltage	CR constant	Used with
SZ-ZM1 **SZ-ZM2**	Front Side	250V AC 50/60Hz	C=0.22μF R=100Ω	SC-03 to SC-5-1
SZ-ZM3 **SZ-ZM4**	Front Side	250V AC 50/60Hz	C=0.33μF R=47Ω	SC-N1 to SC-N3

Note: SZ-ZM1 is not applicable to SC-5-1 with auxiliary contact 2NO+2NC.

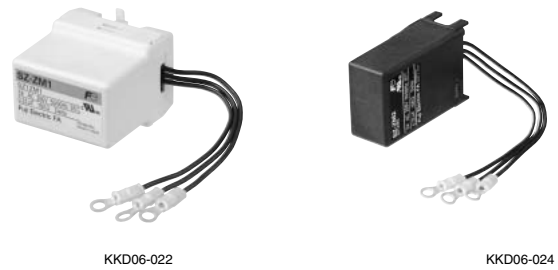

SZ-ZM1 **SZ-ZM2**

■ Performance

Dielectric strength: 230% × Rated voltage, 1min. between terminals
2 × Rated voltage + 1,000V, between terminals and case
Insulation resistance: 2,000MΩ or more
Capacitance tolerance: ±10% or less at 1kHz

■ Characteristics (200V AC 2.2kW motor)

● **With surge suppression unit** (5μsec/div 200V/div)

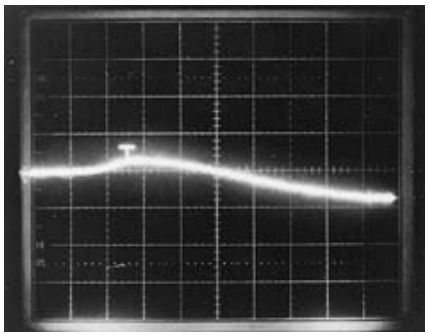

CP-486

● **Without surge suppression unit** (5μsec/div 200V/div)

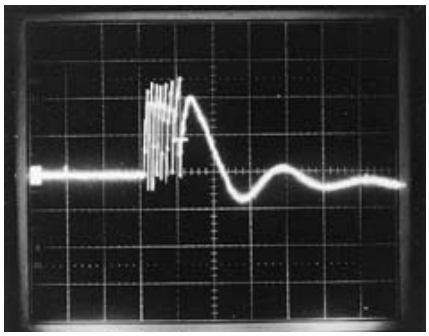

CP-485

■ Wiring example

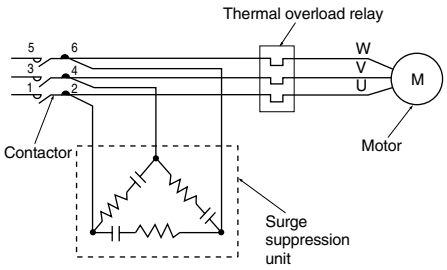

■ Dimensions, mm

SZ-ZM1, ZM3

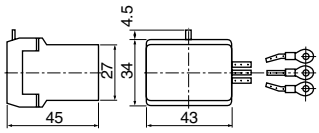

Mass: 60g

SZ-ZM2, ZM4

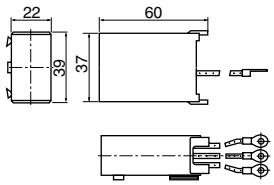

Mass: 60g

■ Mounting methods

● **Front mounting/SZ-ZM1, ZM3**

Set the unit on the contactor and slide it in direction ②.
Make sure that the unit's hook is in the mounting slot.
To detach the unit, push up on the units's hook and move the unit in the reverse of direction ②.
Connect the 3 lead wires of the unit to the contactor's load side terminals 2, 4 and 6. Wires can be connected to any of the terminals 2, 4 or 6.

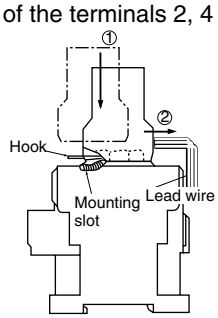

● **Side mounting /SZ-ZM2, ZM4**

Push the protruding portions of the unit into the mounting slots of the contactor.
Connect the 3 lead wires of the unit to the contactor's load side terminals 2, 4 and 6. Wires can be connected to any of the terminals 2,4 or 6.

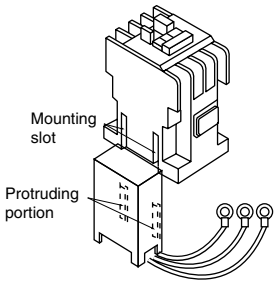

Downloaded from Arrow.com.

Mechanical interlock units and power connection kit for reversing

This SZ-RM unit consists of an interlock block, which mechanically prevents the simultaneous engagement of forward and reverse contactors, and a connector block.
A reversing contactor can be easily assembled with this unit at site.
An interlock mechanism prevents the engagement of 2 contactors at the same time.

Interlock unit		Power connection kit for reversing		
Type	Used with	Type	Color	Used with
SZ-RM	SC-03 to N3	**SZ-RW1**	Blue	SC-03, SC-0
		SZ-RW2	Black	SC-05
		SZ-RW3	Yellow	SC-4-0, SC-4-1
		SZ-RW4	White	SC-5-1
		SZ-RW5	White	SC-N1, SC-N2
		SZ-RW6	White	SC-N2S, SC-N3

■ Mounting methods

1. Position an interlock block between two contactors so that the tall, square projections ① on the movable portions on either side of the interlock block fit into the square holes ② on the sides of the contactors. The short, round projections ③ on the sides of the interlock block should fit into the round holes ④ on the sides of the contactors.

2. Insert the guides ⑤ on the ends of the connector block into the slots ⑥ in the sides of the contactors and push the connector block in between the contactors until the frames ⑦ of the projecting windows on the ends of the connector block catch firmly on the hook-like projections ⑧ on the interlock block.

3. After connecting the contactors to each other, make sure that they operate smoothly by pressing down the movable manual operator one at a time.

4. To separate the contactors, insert the end of a flat-bladed screwdriver under the frame ⑦ of one of the projecting windows on the connector block and lift it up and over the hook-like projection ⑧ on the interlock block. While lifting up on the frame ⑦, push against the connector block to eject it from between the contactors.

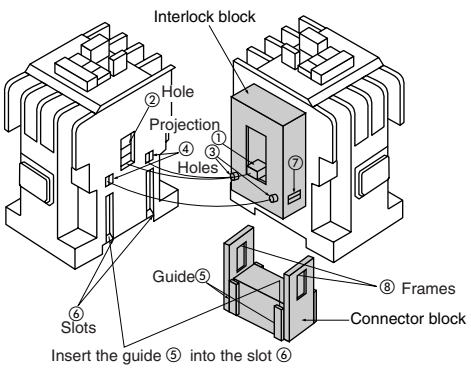

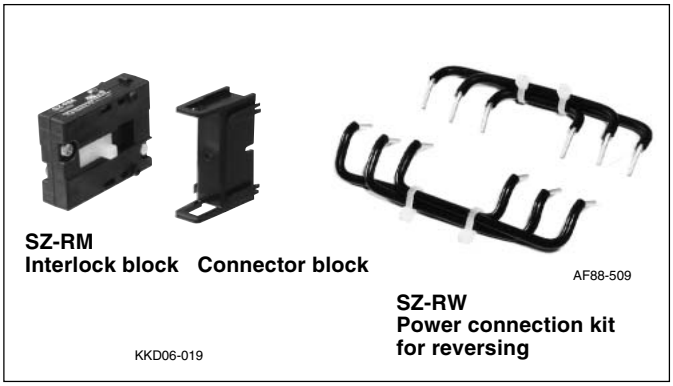

■ Dimensions, mm

Interlock block

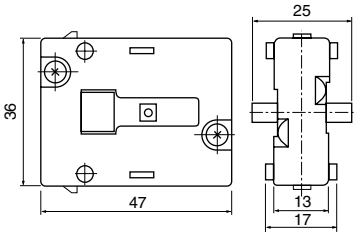

Mass: 18g

Connector block

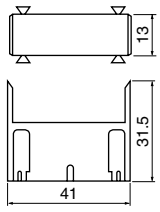

Mass: 4.2g

Power connection kit for reversing

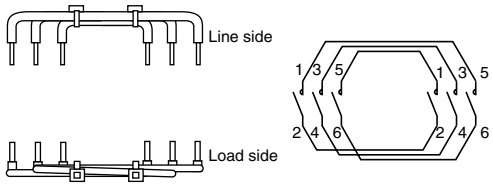

Cautions on attaching interlock unit to SC-03 and SC-0
Insert the protruded portion of the interlock unit into the upper (not lower) part of two slots on the side of the contactor by pressing the manual operator of the contactor.

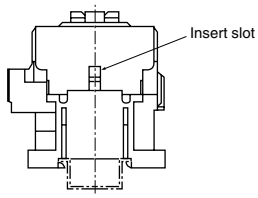

Downloaded from Arrow.com.

Operation counter units for SC-03 to N3

■ Features

This unit counts the ON-OFF operation times of a contactor. The contact lifetime can be estimated at a glance.
This operation counter unit is a mechanical type counter which can be easily attached to the SC series contactors (Frame size 03 to N3) with snap-on fittings.
Before, the operation times of contactors were estimated from the operation status of other equipment. However, the operation times of contactors can be precisely counted and easily checked with this unit.

The date for periodical maintenance and contact lifetime can be estimated directly counting the operation times of contactors.
So preventive maintenance of important facilities or plant become more effective.
2 types (without and with output contact type) are available.
The first one only counts and display the operation times up to 9,999,999.
The another type is an output contact type which outputs the alarm output with a built-in reed switch after counting and displaying specified operation times (fixed).

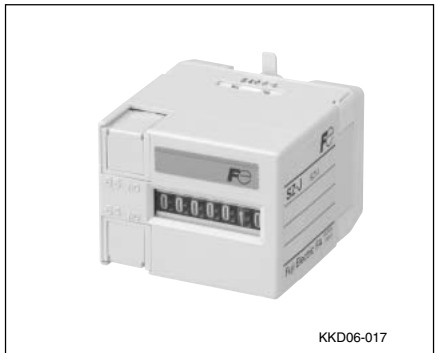

SZ-J8

■ Specifications

Type	SZ-J	SZ-J□
Alarm output contact	Not provided	Provided
Number of digits	7 digits	
Counting method	The counter increments by one each time the contactor completes one ON-OFF operation	
Counting speed	Max. 10Hz	
Reset function (to 0)	Not provided	
Output contact Arrangement Rating Making current	 – –	 1N 24V AC/DC 100mA Max. 4A
Mechanical durability	10 million operations	
Used with	SC-03 to SC-N3	SC-03 to SC-5-1

Discontinued

■ Types and output contact operation

Type	Preset operation value ON	OFF
SZ-J	—	—
SZ-J1	1 million	3 million
SZ-J2	2 million	4 million
SZ-J3	3 million	5 million
SZ-J4	4 million	6 million
SZ-J5	5 million	7 million
SZ-J6	6 million	8 million
SZ-J7	7 million	9 million
SZ-J8	8 million	0

■ Wiring diagram (Example)

SZ-J□

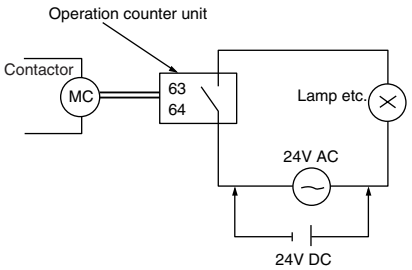

■ Dimensions, mm

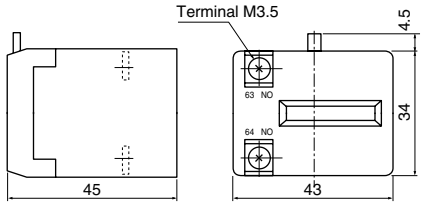

Mass: SZ-J 35g
SZ-J1 to J8 39g

■ Operation

SZ-J
Without output contact

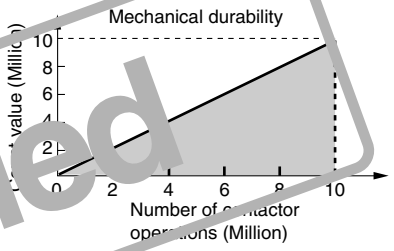

SZ-J□
With output contact
Example SZ-J5

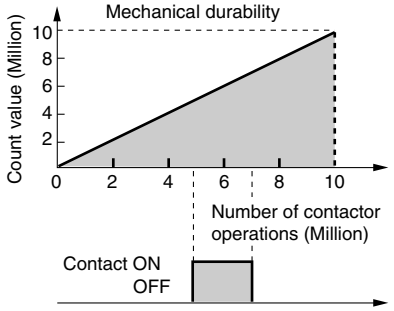

Note: The SZ-J□ operation counters (with alarm output contact) continue counting after an alarm is output. The alarm output is maintained for about 2 million operations.

Downloaded from Arrow.com.

Terminal covers

The SZ-T type terminal cover conforms to DIN 57106 and VDE 0106 Teil 100 requirements regarding worker safety. The cover increases safety during maintenance and inspection.

Description	Type	Used with
For contactor	**SZ-T1** **SZ-T2** **SZ-T3** **SZ-T4** **SZ-T22** **SZ-T23** **SZ-N4T** **SZ-N6T** **SZ-N7T** **SZ-N8T** **SZ-N11T**	SC-03, 0, SH-4 SC-05, SH5 SC-4-0, 4-1 SC-5-1, SJ-1SG SC-N1, N2 SC-N2S, N3 SC-N4, N5A SC-N6 SC-N7 SC-N8, N10 SC-N11, N12
For starter	**SZ-T1** **SZ-T12**	SW-03/3H, 0/3H
	SZ-T2 **SZ-T12**	SW-05/3H
	SZ-T3 **SZ-T13**	SW-4-0/3H, 4-1/3H SJ-1SWG
	SZ-T4 **SZ-T13**	SW-5-1/3H
	SZ-T22 **SZ-T16**	SW-N1/3H, N2/3H
	SZ-T23 **SZ-T17**	SW-N2S/3H, N3/3H
	SZ-N4T **SZ-WN4T**	SW-N4/3H, N5A/3H
	SZ-N6T **SZ-WN6T**	SW-N6/3H
	SZ-N7T **SZ-WN7T**	SW-N7/3H
	SZ-N8T **SZ-WN8T**	SW-N8/3H
	SZ-N8T **SZ-WN10T**	SW-N10/3H
	SZ-N11T **SZ-WN11T**	SW-N11/3H, N12/3H
For auxiliary contact block	**SZ-T5** **SZ-T6** **SZ-T7**	SZ-A40, A31, A22, A222 SZ-A40H, A31H, A22H SZ-A20, A11, A02, A111 SZ-AS1, AS2 SZ-AS1H, AS2H, AS3H
For thermal overload relay on-contactor mounting	**SZ-T12** **SZ-T13** **SZ-T16** **SZ-T17**	TR-0N, TK-0N TR-5-1N, TK-5-1N TR-N2, TK-N2 TR-N3, TK-N3
For thermal overload relay separate mounting	**SZ-T14** **SZ-T15** **SZ-RN6T**	TR-N2H, TK-N2H TR-N3H, TK-N3H TR-N6H, TK-N6H
Thermal overload relay base unit for separate mounting	**SZ-T10** **SZ-T11**	SZ-HB SZ-HC
For coil drive unit	**SZ-T7**	SZ-CD5, SZ-CD6

SC-0 + SZ-T1

SC-N6 + SZ-N6T + SZ-N6T

Description	Type	Used with
For reversing contactor	**SZ-T1** **SZ-T2** **SZ-T3** **SZ-T4** **SZ-T22** **SZ-T23**	SC-03RM, 0RM SC-05RM SC-4-0RM, 4-1RM SC-5-1RM SC-N1RM, N2RM SC-N2SRM, N3RM
	SZ-N4RT1 **SZ-N4RT2**	SC-N4RM, N5ARM
	SZ-N6RT1 **SZ-N6RT2**	SC-N6RM
	SZ-N7RT1 **SZ-N7RT2**	SC-N7RM
	SZ-N8RT1 **SZ-N8RT2**	SC-N8RM, N10RM
	SZ-N11RT1 **SZ-N11RT2**	SC-N11RM, N12RM
For reversing starter	**SZ-T1** **SZ-T12**	SW-03RM, 0RM
	SZ-T2 **SZ-T12**	SW-05RM
	SZ-T3 **SZ-T13**	SW-4-0RM, 4-1RM
	SZ-T4 **SZ-T13**	SW-5-1RM
	SZ-T22 **SZ-T16**	SW-N1RM, N2RM
	SZ-T23 **SZ-T17**	SW-N2SRM, N3RM

■ Contactors and starters with terminal cover

Contactors, starters, industrial relays, and thermal overload relays with a terminal cover are also available as the finger-protected type for the European market. Suffix the code /T at the end of the type number, when ordering, for this type.

Example
SC-03/T type: Contactor **SC-03**+Terminal cover **SZ-T1**
SW-03/3HT type: Starter **SW-03/3H**+Terminal cover **SZ-T1+SZ-T12**

Downloaded from Arrow.com.

Terminal covers (Continued)

■ Dimensions, mm

Contactors

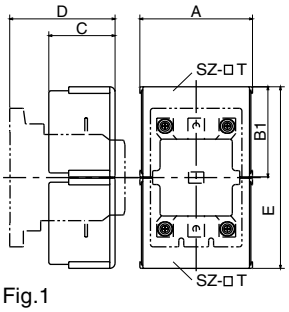

Fig.1

Starters

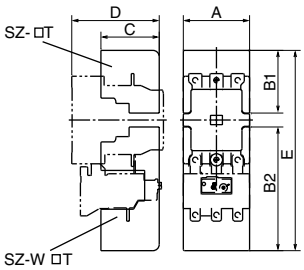

Fig.2

Reversing contactors

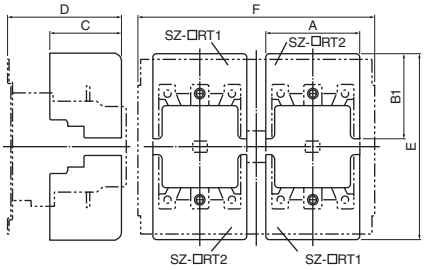

Fig.3

Type Line side	Load side	A	B1	B2	C	D	E	F	Fig. No.
SZ-N4T	**SZ-N4T**	97.5	90	—	91.5	119*1	199	—	1
SZ-N6T	**SZ-N6T**	100	94.5	—	88	132	210	—	1
SZ-N7T	**SZ-N7T**	115	104	—	89	134	228	—	1
SZ-N8T	**SZ-N8T**	170	136	—	100	159	274	—	1
SZ-N11	**SZ-N11T**	185	175	—	116	175	352	—	1
SZ-N4T	**SZ-WN4T**	97.5	90	143.5	91.5	119*1	252.5	—	2
SZ-N6T	**SZ-WN6T**	100	94.5	186.5	88	132	302	—	2
SZ-N7T	**SZ-WN7T**	115	104	193	89	134	317	—	2
SZ-N8T	**SZ-WN8T**	170	136	237	100	159	375	—	2
SZ-N8T	**SZ-WN10T**	170	136	228	100	159	366	—	2
SZ-N11T	**SZ-WN11T**	185	175	304	116	175	481	—	2
SZ-N4RT1	**SZ-N4RT2**	97.5	90	—	91.5	124*2	199	230	3
SZ-N6RT1	**SZ-N6RT2**	100	94.5	—	88	140	210	250	3
SZ-N7RT1	**SZ-N7RT2**	115	104	—	89	144	228	290	3
SZ-N8RT1	**SZ-N8RT2**	160	136	—	100	172	277	330	3
SZ-N11RT1	**SZ-N11RT2**	175	175	—	116	194	352	360	3

Note: *1 134 for SC-N5A, SW-N5A *2 139 for SC-N5ARM

■ Mounting methods

SZ-N4T, SZ-WN4T

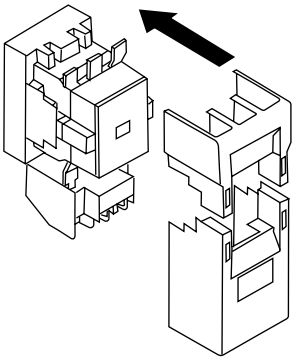

SZ-N6T to N11T, SZ-WN6T to WN11T

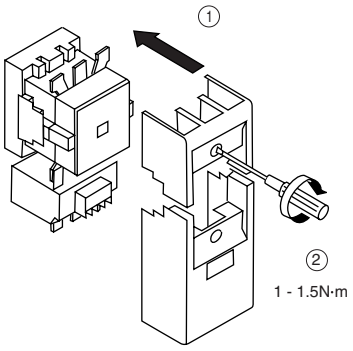

Insulation barriers for SC-N4 to N12

■ Features

These optional insulation barriers, prevent accidental short-circuits caused by metallic objects falling onto the terminals

SW-N6+SZ-B1

Description	Type	Used with
For contactor	**SZ-B1**	SC-N4, N5A, N6, N7
	SZ-B2	SC-N8, N10, N11, N12
For starter	**SZ-B1**	SW-N4/3H, N5A/3H, N6/3H, N7/3H
	SZ-B2	SW-N8/3H, N10/3H, N11/3H, N12/3H
For thermal overload relay	**SZ-B1**	TR-N6H, TK-N6H
	SZ-B2	TR-N10H, N12H, TK-N10H, N12H

■ Dimensions, mm

SZ-B1

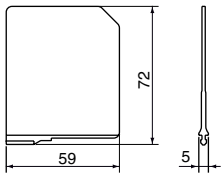

SZ-B2

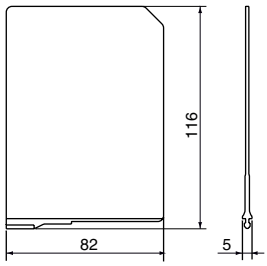

■ Mounting methods

Contactors

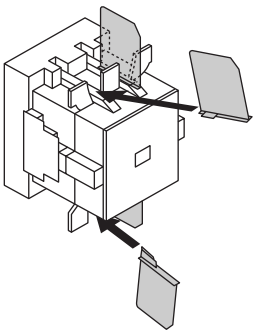

Starters

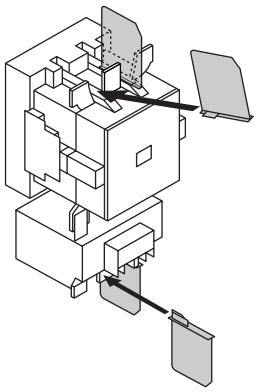

Thermal overload relays

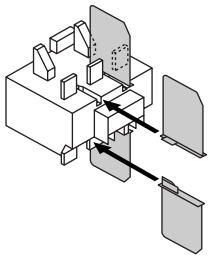

Downloaded from Arrow.com.

Live-section cover

The live-section cover completely encloses the front of a contactor or starter for increased worker safety during maintenance and inspection.

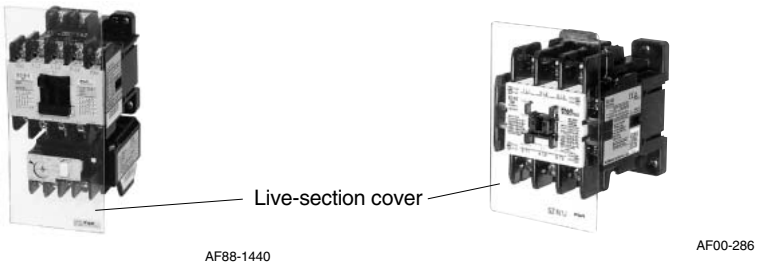

SW-5-1/3H+SZ-JW4 **SC-N2+SZ-N1J**

■ Dimensions, mm

• Contactors **• Starters**

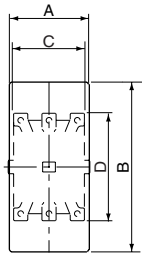

Fig. 1

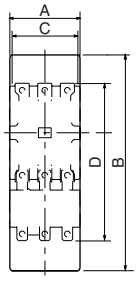

Fig. 2

• Starters (reversing)

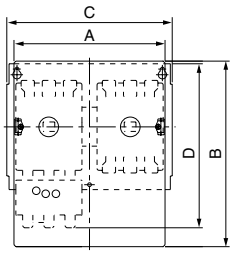

Fig. 3

■ Mounting methods

SZ-JC1 to JC4, SZ-N1J, N2SJ, SZ-JW1 to JW4 , SZ-WN1J, WN2SJ

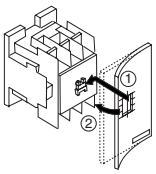

SZ-N4J to N11J, SZ-WN4J to WN11J

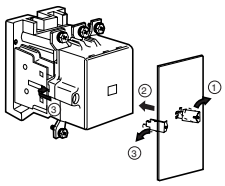

For contactor (Non-reversing)

Cover type	Contactor Type	Fig. No.	Live-section cover A	Live-section cover B	Contactor C	Contactor D
SZ-JC1	SC-03, 0	1	43	97	43	81
SZ-JC2	SC-05	1	53	97	53	81
SZ-JC3	SC-4-0, 4-1	1	53	100	53	81
SZ-JC4	SC-5-1	1	64	100	64	81
SZ-N1J	SC-N1, N2	1	74	120	74	87
SZ-N2SJ	SC-N2S, N3	1	88	140	88	110
SZ-N4J	SC-N4, N5A	1	93	192	88	127
SZ-N6J	SC-N6	1	106	214	100	144
SZ-N7J	SC-N7	1	120	233	115	156
SZ-N8J	SC-N8, N10	1	138	265	138	209
SZ-N11J	SC-N11, N12	1	160	336	148	240

For starter (Non-reversing)

Cover type	Starter Type	Fig. No.	Live-section cover A	Live-section cover B	Starter C	Starter D
SZ-JW1	SW-03/3H, 0/3H	2	44	140	44	122
SZ-JW2	SW-05/3H	2	53	140	53	122
SZ-JW3	SW-4-0/3H, 4-1/3H	2	53	145	53	127
SZ-JW4	SW-5-1/3H	2	64	145	64	127
SZ-WN1J	SW-N1/3H, N2/3H	2	74	175	74	146
SZ-WN2SJ	SW-N2S/3H, 3/3H	2	88	205	88	177
SZ-WN4J	SW-N4/3H, N5A/3H	2	93	254	88	189
SZ-WN6J	SW-N6/3H	2	106	281	100	225
SZ-WN7J	SW-N7/3H	2	120	300	115	237
SZ-WN8J	SW-N8/3H	2	138	347	138	305
SZ-WN10J	SW-N10/3H	2	138	347	138	287
SZ-WN11J	SW-N11/3H, N12/3H	2	160	423	148	360

For starter (reversing)

Cover type	Starter Type	Fig. No.	Live-section cover A	Live-section cover B	Starter C	Starter D
SZ-WN4RJ	SW-N4RM/3H, N5ARM/3H	3	204	254	230	208
SZ-WN6RJ	SW-N6RM/3H	3	229	281	250	247.5
SZ-WN7RJ	SW-N7RM/3H	3	258	300	290	266
SZ-WN8RJ	SW-N8RM/3H	3	291	347	330	370
SZ-WN10RJ	SW-N10RM/3H	3	291	347	330	370
SZ-WN11RJ	SW-N11RM/3H, N12RM/3H	3	328	423	360	480

Note: Side mounting types with 4NO + 4NC auxiliary contacts are available. Add the suffix "/4" to the type number when ordering.

Downloaded from Arrow.com.

2-pole DC magnetic contactors

Up to 55kW 220 Volts DC
Operational current up to 290 Amps 220 Volts DC

■ Description

These highly efficient SB series DC magnetic contactors are improved versions of the SC-N series contactors. The magnetic assembly in these improved units is now the SUPER MAGNET so that these contactors will operate on both AC and DC power supplies and power consumption is minimized.

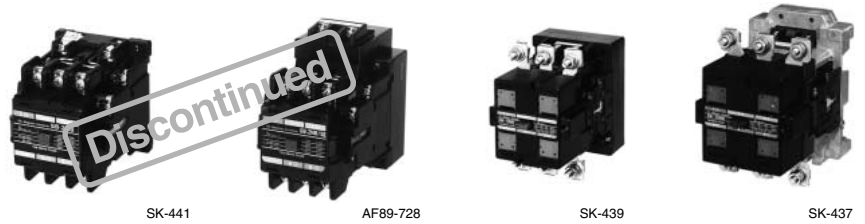

SB-2N **SB-2NB** | **SB-2N/SE** **SB-2NB/SE** | **SB-5N** **SB-5NB** | **SB-10N** **SB-10NB**

■ Features

- DC motor control
  5.5kW to 55kW (at 220V DC)
- Circuit voltage: Max. 550V DC
  Rated thermal current: Max. 360A
- A special magnetic blow-out device ensures improved interrupting performance.
- The main contact arrangement is 2NO. 2NO+1NC types are also available. The 1NC is used for Dynamic Brake circuits.
- The SUPER MAGNET system permits these contactors to operate on both AC and DC power supplies*.
- Auxiliary contacts can be supplied up to 4NO+4NC arrangement (2NO+2NC for standard products).

Note: * The SB-2N (2NB) operates only on AC. The SB-2N/SE (2NB/SE) is provided with a SUPER MAGNET and operates on both AC and DC power supplies.

JEM 1038
DC2: For shunt-wound motors:
Starting, switching off during running.
The starting current is less than 2.5 times the rated current.
DC4: For series-wound motors:
Starting, switching off during running.
The starting current is less than 2.5 times the rated current.

■ Ordering code system

S B	3 5	B	A	A	—	02	E	2 2
① ②	③④	⑤	⑥	⑦		⑧	⑨	⑩⑪

① Product category

Description	Code
Contactor and starter	S

② Series category

Description	Code
SB series	B

③④ Frame size

Frame size	Code ③	Code ④
2N Discontinued	3	5
5N	8	5
6N	1	C
10N	2	A
11N	2	K

⑤ Version

Description	Code
Non-reversing, open	
Standard	B
UL approved	1

⑥ Coil specification

Description		Code
Standard	AC operating coil	A
	Both AC and DC operating coil	B
With SUPER MAGNET	Both AC and DC operating coil	S

⑦ Main contact

Contact arrangement	Code
2NO	A
2NO + 1NC	B

⑧ Special main contact (for SB35□□B-)

Main contact	Code
2NC	02
1NO + 2NC	12

⑩⑪ Auxiliary contact

Contact arrangement	Code ⑩	Code ⑪
2NO + 2NC	2	2
3NO + 3NC	3	3
4NO + 4NC	4	4

⑨ Coil voltage

● AC coil/SB-2N

Operating coil voltage 50Hz	60Hz	Code
24V	24 — 26V	E
48V	48 — 52V	C
100V	100 — 110V	1
100 — 110V	110 — 120V	H
110 — 120V	120 — 130V	K
200V	200 — 220V	2
200 — 220V	220 — 240V	M
220 — 240V	240 — 260V	P
346 — 380V	380 — 420V	S
380 — 400V	400 — 440V	4
415 — 440V	440 — 480V	T
480 — 500V	500 — 550V	5

● AC and DC coil/SB-2N/SE, 5N to 11N

Operating coil voltage AC 50/60Hz	DC	Code
24 — 25V	24V	E
48 — 50V	48V	F
100 — 127V	110 — 110V	1
200 — 250V	200 — 220V	2
265 — 347V	—	3
380 — 450V	—	4
460 — 575V	—	5

Downloaded from Arrow.com.

■ Types and ratings

Max. motor capacity (kW) 110V	220V	440V	Rated operational current (A) 110V	220V	440V	Rated thermal current (A)	Auxiliary contact NO	NC	With 2NO main contacts Type	Ordering code	With 2NO+1NC* main contacts Type	Ordering code
3.7	5.5	7.5	40	35	25	60	2	2	**SB-2N**	SB35BAA-■22	**SB-2NB**	SB35BAB-21■22
3.7	5.5	7.5	40	35	25	60	2	2	**SB-2N/SE**	SB35BSA-■22	**SB-2NB/SE**	SB35BSB-21■22
7.5	15	22	85	85	60	120	2	2	**SB-5N**	SB85BBA-■22	**SB-5NB**	SB85BBB-■22
11	22	30	125	120	80	160	2	2	**SB-6N**	SB1CBBA-■22	**SB-6NB**	SB1CBBB-■22
22	37	45	240	200	120	270	2	2	**SB-10N**	SB2ABBA-■22	**SB-10NB**	SB2ABBB-■22
30	55	75	320	290	200	360	2	2	**SC-11N**	SB2KBBA-■22	**SB-11NB**	SB2KBBB-■22

Discontinued

Notes: • Conforming to class DC2 and DC4, JEM 1038
• Auxiliary contact 4NO+4NC is available on request.
* For SB-2NB and SB-2NB/SE, 2NC or 1NO+2NC main contacts are also available.
■: Coil voltage code

■ Auxiliary contact

Type	Rated thermal current (A)	Making and breaking current (AC, A)	Rated operational current (A) AC circuit Volts	AC-15 (ind.)	AC-12 (res.)	DC curcuit Volts	DC-13 (ind.)	DC-12 (res.)
SB-2N to 11N **SB-2NB to 11NB**	10	60	110V	6	10	24V	10	10
			220V	6	10	48V	3	5
			440V	4	10	110V	1.5	2.5
			550V	2.5	10	220V	0.5	1

Note: For DC-13 (inductive load) time constant is 100ms or less.

■ NC contact ratings

Type	Rated thermal current (A)	Dynamic brake* Making current (A)	Operating cycles per hour	Time rating (sec)
SB-2NB	50	60	600	3
SB-2NB/SE	50	60		
SB-5NB	100	130		
SB-6NB	100	190		
SB-10NB	160	360		
SB-11NB	200	480		

Discontinued

Note: * Braking condition: No voltage

■ Performance data
NO contacts (2-pole in series)

Frame size	Making and braking capacity	Operating cycles per hour	Life expectancy (operations) Electrical	Mechanical
SB-2N to 11N **SB-2N/SE** **SB-2NB to 11NB** **SB-2NB/SE**	4 × Ie	1200	500,000	2.5 million

Ie: Rated operational current

■ Coil ratings

Type	Coil voltage and frequency	Code
2N	100V 50Hz/100 to 110V 60Hz	1
	200V 50Hz/200 to 220V 60Hz	2
	380 to 400V 50Hz/400 to 440V 60Hz	4

Discontinued

Notes: • The standard voltages are 100V, 200V, and 400V.
• Voltage ranging from 24V to 550V are also available on request.

Type	Coil voltage and frequency AC	DC	Code
2N/SE	24 to 250V 50/60Hz	24V	E
5N	48 to 50V 50/60Hz	48V	F
6N	100 to 127V 50/60Hz	100 to 110V	1
10N	200 to 250V 50/60Hz	200 to 220V	2
11N	265 to 347V 50/60Hz	—	3
	380 to 450V 50/60Hz	—	4
	460 to 575V 50/60Hz	—	5

Discontinued

Notes: • The coils can be used for both AC and DC input.
• The standard voltages are 100V, 200V, and 400V.
Other voltages are available on request in following range.
Frame size 2N/SE: 24 to 250V 5N to 10N: 24V to 575V
11N: 100 to 575V

Downloaded from Arrow.com.

■ Dimensions, mm

SB-2N, SB-2NB

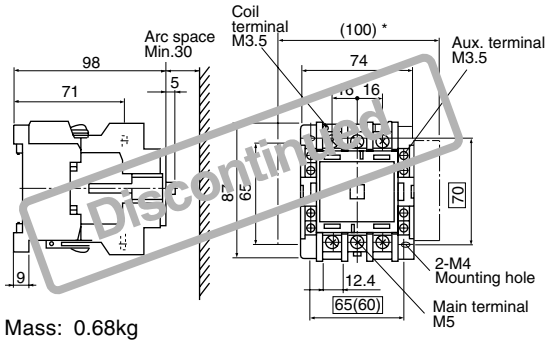

Mass: 0.68kg

SB-2N/SE, SB-2NB/SE

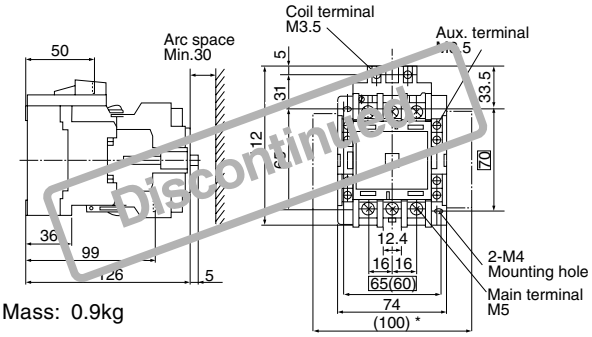

Mass: 0.9kg

SB-5N, SB-5NB, SB-8N, SB-6NB

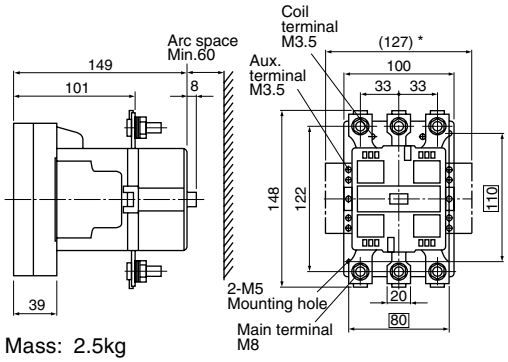

Mass: 2.5kg

SB-10N, SB-10NB

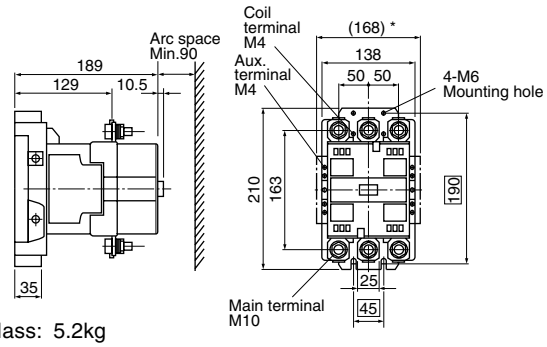

Mass: 5.2kg

SB-11N, SB-11NB

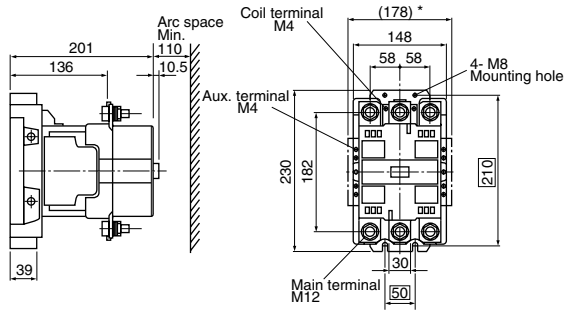

Mass: 6.7kg

Note: * For two side-mounted aux.contact blocks

■ Wiring diagrams

Main contact
2NO

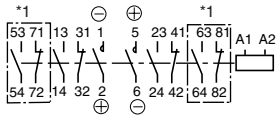

Main contact
2NO+1NC

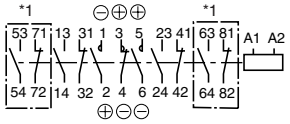

*1 In case of auxiliary contact 4NO+4NC

■ Ordering information

Specify the following:

1. Type number or ordering code

■ Handling notes

1. The main contacts are marked for positive and negative polarities. Do not confuse the polarities when connecting.
2. Be sure to install the contactors upright.
3. Allow adequate arcing space.

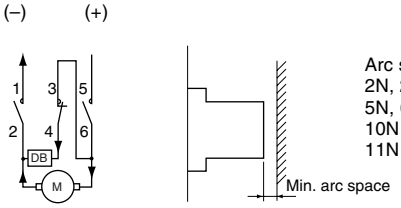

Arc space, mm

2N, 2N/SE:		30
5N, 6N	:	60
10N	:	90
11N	:	110

Downloaded from Arrow.com.

Magnetic contactors FC series

■ Description

FUJI FC series contactors are designed for use in consumer products and light industrial machinery and equipment. They are recommended for applications which call for economy, easy handling and reliability.
Typical applications include air conditioners, show cases, industrial washing machines, heaters, pumps, fans, compressors, dryers and vending machines. They are available in sizes ranging from FC-0UL to 4UL and up to 30kW at 440 Volts AC.

■ Features

- Small size, light weight
- Budget priced
- Long service life
  Electrical life expectancy: 250,000 operations. Good for 7 years service if they are operated 100 times a day.
- Scrubbing action
  The contacts are self-cleaning by a scrubbing action during operation and are made of a silver alloy.
- Highly reliable operating coil
  Pick-up voltage
  75% of rated voltage
- Self-lifting terminals
  Easy to wire

■ Construction

FC-0UL, 0SUL

- Their small size permits them to be mounted in positions where space is limited and they can be mounted in a variety of directions.
- The standard terminals are screw-type. Printed board type and tab terminals are also available.

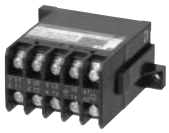

Screw type
FC-0UL 0SUL

Tab terminal type
FC-0TUL

Printed boad type
FC-0A

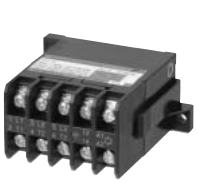

FC-0UL

FC-1UL

FC-3UL

- The contact section is housed inside the molded frame and is totally enclosed. The dust-tight construction keeps contact performance at a high level and results in a long trouble-free service life.

FC-1UL to 4UL

- FUJI self-lifting terminals make connection work simple.
- Their free floating design results in quiet operation and eliminates chattering and bouncing.
- The magnetic yokes have been given a rust preventing treatment.
- Coil power consumption is low.

■ Ordering information

Specify the following:
1. Ordering code
2. Operating coil voltage code
3. Auxiliary contact arrangement:
   In the case of type FC-0UL, 0A and 0TUL, specify the contact arrangement.

■ Types and ratings (IEC60947-4-1)

Motor capacity (kW) AC-3 3-phase 200V 240V	380V 440V	Operational current (A) AC-3 3-phase 200V 240V	380V 440V	Operational current (A) AC-1 *2	Auxiliary contact NO	NC	Non-reversing Open Type	Ordering code
3	2.5	12	6	20	1	–	**FC-0UL**	SF12B1A-■10
3	2.5	12	6	20	–	1	**FC-0UL**	SF12B1A-■01
3.5	4.5	15	10	20	1	–	**FC-0SUL**	SF15B1A-■10
3.5	4.5	15	10	20	–	1	**FC-0SUL**	SF15B1A-■01
5.5	5.5	20	13	30	1	1*1	**FC-1UL**	SF20B1A-■11
7.5	7.5	27	18	30	1	1*1	**FC-1SUL**	SF26B1A-■11
11	11	40	26	45	1	1*1	**FC-2SUL**	SF38B1A-■11
15	18.5	52	40	60	1	1*1	**FC-3UL**	SF50B1A-■11
18.5	30	65	65	80	1	1*1	**FC-4UL**	SF65B1A-■11
1.5	–	8	–	8	1	–	**FC-0A**	SF08BBA-■10
1.5	–	8	–	8	–	1	**FC-0A**	SF08BBA-■01
3	2.5	12	6	20	1	–	**FC-0TUL**	SF12B3A-■10
3	2.5	12	6	20	–	1	**FC-0TUL**	SF12B3A-■01
3.5	4.5	15	10	20	1	–	**FC-0STUL**	SF15B3A-■10
3.5	4.5	15	10	20	–	1	**FC-0STUL**	SF15B3A-■01
3	2.5	12	6	20	1	–	**FC-0/GUL**	SF12B1G-■10
3	2.5	12	6	20	–	1	**FC-0/GUL**	SF12B1G-■01
3.5	4.5	15	10	20	1	–	**FC-0S/GUL**	SF15B1G-■10
3.5	4.5	15	10	20	–	1	**FC-0S/GUL**	SF15B1G-■01
3	2.5	12	6	20	1	–	**FC-0T/GUL**	SF12B3G-■10
3	2.5	12	6	20	–	1	**FC-0T/GUL**	SF12B3G-■01
3.5	4.5	15	10	20	1	–	**FC-0ST/GUL**	SF15B3G-■10
3.5	4.5	15	10	20	–	1	**FC-0ST/GUL**	SF15B3G-■01
1.5	–	8	–	8	1	–	**FC-0A/G**	SF08BBG-■10
1.5	–	8	–	8	–	1	**FC-0A/G**	SF08BBG-■01

Notes: *1 Auxiliary contact arrangement 2NO or 2NC is available.
Cable connection: FC-0A: P. C. board
FC-0TUL, 0STUL: With flat connection tabs
Other types: With screw-type terminals
*2 Thermal current (A)
■: Coil voltage code, see page 01/82.

Downloaded from Arrow.com.

■ Ordering code system

● Contactor

SF	35	B	1	A	—	E	22
①②	③④		⑤	⑥		⑧	⑨⑩

● Starter

SF	35	B	A	A	N	—	E	22	TB	D
①②	③④		⑤	⑥	⑦		⑧	⑨⑩	⑪	⑫

① Product category

Description	Code
Contactor and starter	S

② Series category

Description	Code
F series	F

③④ Frame size

Frame size	Code	
	③	④
0, 0T	1	2
0A	0	8
0S, 0ST	1	5
1	2	0
1S	2	6
2S	3	5
3	5	0
4	6	5

⑤ Version

Description	Code
Non-reversing, open	
Contactor	
Standard	1
With tab terminal	T
Starter	
Standard	A
Non-reversing, enclosed	
Standard	C
With ON-OFF pushbutton (plastic enclosure)	P
With ON-OFF pushbutton (steel enclosure)	S
With ON-OFF pushbutton and lamp (plastic enclosure)	K

⑥ Coil specification

Description	Code
AC operating coil	A
DC operating coil	G

⑦ Type of thermal overload relay

Description	No. of element	Code
Standard	2, 3	N
Quick operating	3	S
Open-phase protection	3	E

⑧ Coil voltage

● **AC coil**

Operating coil voltage 50Hz	60Hz	Code
24V	24 — 26V	E
48V	48 — 52V	F
100V	100 — 110V	1
100 — 110V	110 — 120V	H
110 — 120V	120 — 130V	K
200V	200 — 220V	2
200 — 220V	220 — 240V	M
220 — 240V	240 — 260V	P
346 — 380V	380 — 420V	S
380 — 400V	400 — 440V	4
415 — 440V	440 — 480V	T

● **DC coil**

Operating coil voltage	Code
24V DC	E
48V DC	F
60V DC	G
100V DC	1
110V DC	H
200V DC	2
220V DC	M

⑨⑩ Auxiliary contact

Frame size 0 to 4

Contact arrangement	Code	
	⑨	⑩
1NO	1	0
1NC	0	1
2NO	2	0
1NO + 1NC	1	1
2NC	0	2

⑪ Thermal overload relay ampere setting range

Ampere setting range (A)	Code	Ampere setting range (A)	Code	Ampere setting range (A)	Code
0.1 — 0.15	TA	1.4 — 2.2	TM	7 — 11	TV
0.15 — 0.24	TC	1.7 — 2.6	TN	8 — 16	TV
0.24 — 0.36	TE	2.2 — 3.4	TP	9 — 13	TW
0.36 — 0.54	TG			12 — 18	TX
				13 — 20	TA*1
				18 — 26	TB
				20 — 26	TC*2
0.48 — 0.72	TH	2.8 — 4.2	TR	24 — 36	TE
0.64 — 0.96	TJ	4 — 6	TS	28 — 40	TF
0.8 — 1.2	TK	5 — 8	TT	34 — 50	TG
0.95 — 1.45	TL	6 — 9	TU	45 — 67	TJ

Note: *1 For FW-1S: X *2 For FW-1S: Y

⑫ No. of heater element

Description	Code
2-element	Blank
3-element	D

Downloaded from Arrow.com.

■ Auxiliary contact ratings (IEC 60947-4-1)

Frame size	Rated thermal current (A)	Voltage (V AC)	Making & breaking capacity (A)	Rated operational current (A) Inductive	Rated operational current (A) Resistive
0, 0A, 0T 0S	8	110	40	4	8
		220	40	4	8
		440	20	2	8
1, 1S, 2S 3, 4	10	110	100	10	10
		220	60	6	10
		440	60	6	10

■ Performance data

Frame size	Making capacity (A)	Breaking capacity (A)	Operating cycles per hour	Life expectancy (operations) Electrical	Life expectancy (operations) Mechanical
0 to 1S	10 × Ie	10 × Ie	600	250,000	1 million
2S to 4	10 × Ie	10 × Ie	600	250,000	1 million

Ie: Rated operational current

■ Coil ratings

Frame size	Power consumption Inrush (VA)	Power consumption Sealed (VA)	Voltage and frequency *	Wiring	Operating voltage range
0, 0A, 0T, 0S	23	6	200V 50Hz	A	0.75 to 1.1 times rated coil voltage
1, 1S	75	11			
2S	125	14			
3	125	14			
4	200	14.3		B	

Notes: * Other voltages between 24V and 440V AC are available.
DC operated type FC-0/G and FC-0T/G are also available.
Coil voltage: 24, 48, 60, 100, 120 , 200, 210 and 220V DC

FC-2SUL, 3UL

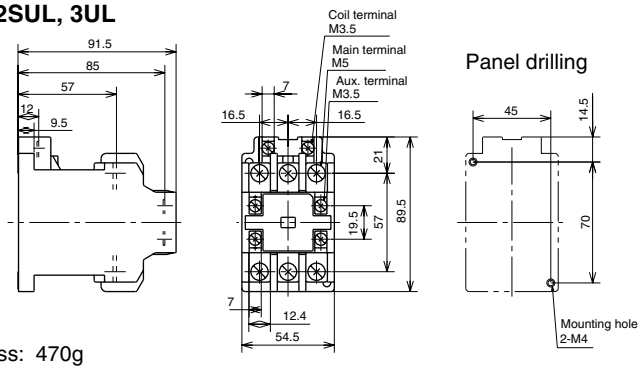

Mass: 470g

FC-4UL

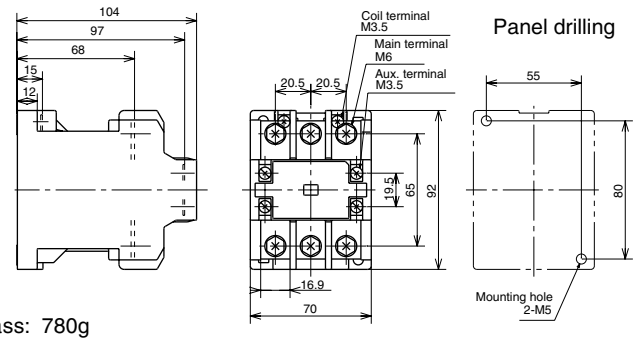

Mass: 780g

■ Dimensions, mm

FC-0UL, 0SUL

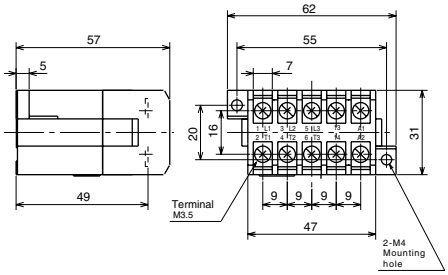

Mass: 160g

FC-0TUL, 0ST/UL

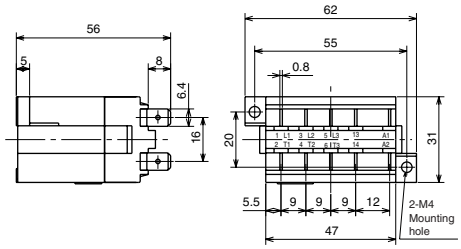

Mass: 160g

FC-0A

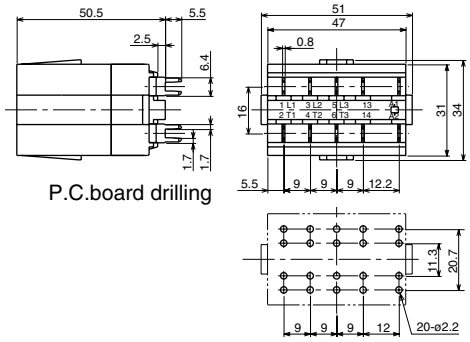

Mass: 140g

FC-1UL, 1SUL

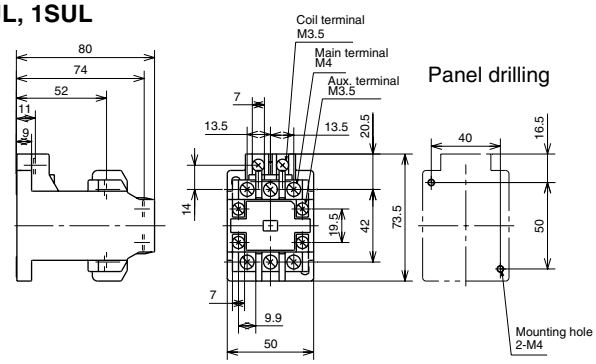

Mass: 320g

■ Wiring diagrams

FC-0UL, 0A, 0TUL, 0SUL, 0STUL

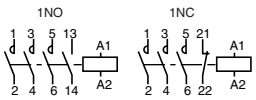

FC-1UL, 1SUL, 2SUL, 3UL, 4UL

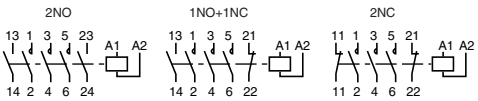

Downloaded from Arrow.com.

Non-reversing motor starters
FW series
Up to 30kW 440 Volts 3-phase

■ Description

The FUJI FW-series starters are primarily designed for domestic and light industrial use, and can be expected to have a service life of over seven years under conditions where they are operated over 100 times a day. Typical applications are air conditioners, industrial washing machines, boiler and other pumps, fans, compressors, dryers.
The FC contactor can be supplied separately. They are simple, compact and reasonably priced, yet highly efficient and dependable. The thermal overload relay is fitted with elements that compensate for changes in ambient temperature, so stabilizing operations in spite of the season.

Note: In case of F series, contacts and operating coil cannot be replaced at site.

AF97-691
FW-0

KK01-205
FW-1S

KK01-200
FW-□C

■ Ordering information

Specify the following:
1. Ordering code
2. Operating coil voltage code
3. Overload relay setting range code

■ Thermal overload relay:

See page 01/86.

■ Types and ratings

Motor capacity (kW) 3-phase 200V 240V	380V 440V	Operational current (A) 3-phase 200V 240V	380V 440V	Aux. contact NO	NC	Open 3-element Type	Ordering code	Enclosed 3-element Type	Ordering code	Combined thermal overload relay Type
3	2.5	12	6	1	–*1	**FW-0/3H**	SF12BAAN-■10T□D	**FW-0C/3H**	SF12BCAN-■10T□D	TR-0/3
3.5	4.5	15	10	1	–*1	**FW-0S/3H**	SF15BAAN-■10T□D	**FW-0SC/3H**	SF15BCAN-■10T□D	TR-0/3
5.5	5.5	20	13	1	1*2	**FW-1/3H**	SF20BAAN-■11T□D	**FW-1C/3H**	SF20BCAN-■11T□D	RCa3737-1CNF/3
7.5	7.5	27	18	1	1*2	**FW-1S/3H**	SF26BAAN-■11T□D	**FW-1SC/3H**	SF26BCAN-■11T□D	TR-1SN/3
11	11	40	26	1	1*2	**FW-2S/3H**	SF35BAAN-■11T□D	**FW-2SC/3H**	SF35BCAN-■11T□D	TR-2NF/3
15	18.5	52	40	1	1*2	**FW-3/3H**	SF50BAAN-■11T□D	**FW-3C/3H**	SF50BCAN-■11T□D	TR-2NF/3
18.5	30	65	65	1	1*2	**FW-4/3H**	SF65BAAN-■11T□D	**FW-4C/3H**	SF65BCAN-■11T□D	TR-3N/3

Notes: *1 Auxiliary contact arrangement 1NC is available.
*2 Auxiliary contact arrangement 2NO or 2NC is available.
Conforming to IEC 60947-4-1 AC-3.

■: Coil voltage code, see page 01/82.
□: Thermal overload relay ampere setting range code, see page 01/82.

■ Coil ratings

Frame size	Power consumption (max.) Inrush (VA)	Sealed (VA)	Voltage and frequency *
0, 0S	23	6	200V AC
1, 1S	75	11	50Hz
2S	125	14	
3	125	14	
4	200	14.3	

Notes: * Other voltages between 24V and 440V AC are available.
DC operated type FC-0/G and FC-0T/G are also available.
Coil voltage: 24, 48, 60, 100, 120 , 200, 210 and 220V DC

Wiring example

100V/100-110V
50Hz/60Hz

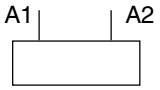

■ Performance data

Frame size	Making & breaking capacity	Operating cycles per hour	Durability (operations) Electrical	Mechanical
0, 0S, 1, 1S	10 × Ie	600	250,000	1,000,000
2S, 3, 4	10 × Ie	600	250,000	1,000,000

Ie: Rated operational current (Amps).

■ Auxiliary contact ratings

Frame size	Rated thermal current (A)	Voltage (V AC)	Making & breaking capacity (A)	Rated operational current A) Inductive (cosϕ=0.65)	Resistive (cosϕ=0.95)
0, 0S	8	200-240	40	4	8
		380-440	20	2	8
1, 1S, 2S	10	200-240	60	6	10
3, 4		380-440	60	6	10

Downloaded from Arrow.com.

■ Dimensions, mm

● Open type

FW-0/3H, FW-0S/3H

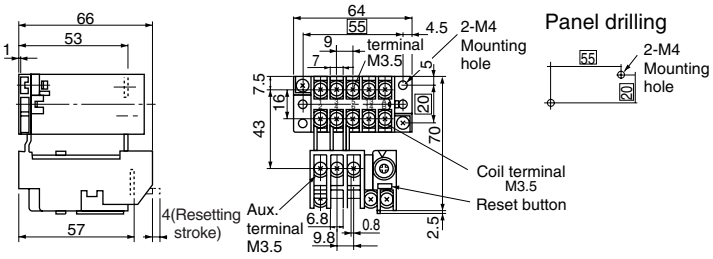

Mass: 0.29kg (with 3-thermal element)

FW-1/3H, FW-1S/3H, 2S/3H, 3/3H, 4/3H

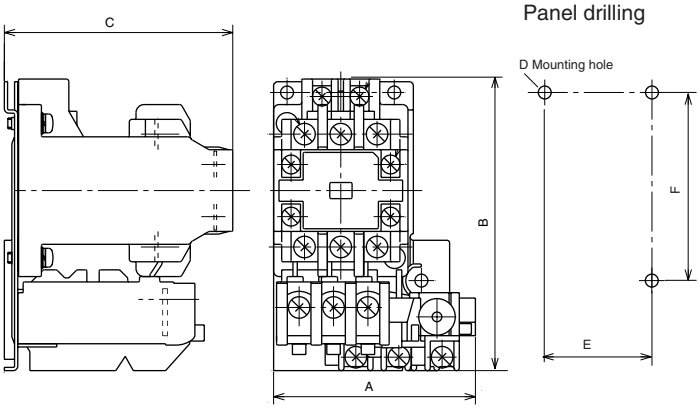

Type	A	B	C	D	E	F	Mass (kg)
FW-1/3H	75	108.5	85	2-M4	50	70	0.49
FW-1S/3H	68	121	90	2-M4	40	110	0.55
FW-2S/3H	78	138.5	91.5	2-M4	45	70	0.71
FW-3/3H	78	138.5	91.5	2-M4	45	70	0.71
FW-4/3H	90	175	109	3-M5	75	160	1.3

Mass: With 3-thermal element

Dimensions for reference only. Confirm before construction begins.

● Enclosed type

FW-0C, 0SC, 1C

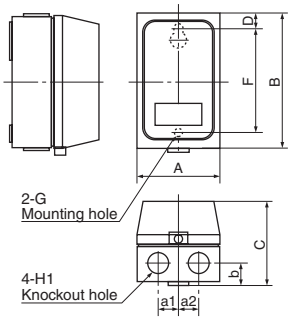

FW-1SC, 2SC, 3C, 4C

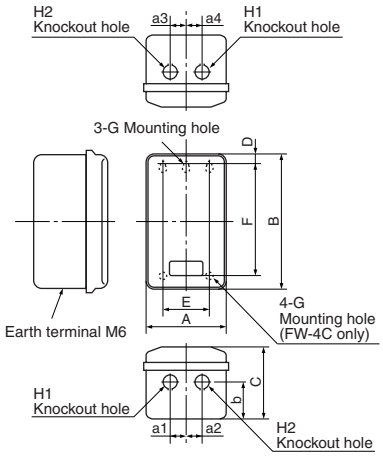

Type	A	B	C	D	E	F	G
FW-0C, 0SC*	71	120	79	15	–	90	ø5.3
FW-1C	94	166	95	15.5	–	135	ø5.5
FW-1SC	120	195	115	21.5	80	150	ø7
FW-2SC, 3C	130	230	124	20	80	190	ø7
FW-4C	175	320	145	35	110	250	ø7

Type	H1	H2	a1	a2	a3	a4	b	Mass(kg)
FW-0C, 0SC*	ø17	–	17.5	17.5	17.5	17.5	20	0.25
FW-1C	ø22	–	20	20	20	20	24	0.7
FW-1SC	ø22	ø22	22.5	22.5	20	20	35	1.5
FW-2SC, 3C	ø28	ø28	27	27	20	20	52	2
FW-4C	ø35	ø28	15	35	35	15	70	3.7

Note: * The enclosure dimensions given here are based on a "TR-0 thermal overload relay and 2-elements" being incorporated in the case. The temperature rise inside the enclosure may sometimes become a problem if a 3-element is used instead of a 2-element. In this case the FW-0P (Enclosure with pushbuttons) is recommended.

■ Wiring diagrams

FW-0/3H, 0S/3H

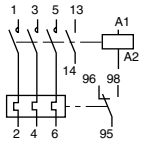

FW-1S/3H to 4/3H

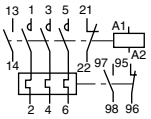

FW-1/3H

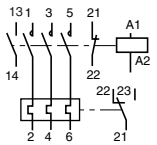

Example FW-2S/3H

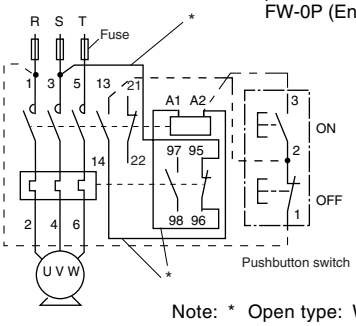

Note: * Open type: Wirings from 3 to 95 , A2 to 14 and A1 to 96 are not connected at factory. Connect the wires at site.

Downloaded from Arrow.com.

Thermal overload relays for FW series

Type*1 (3-element)	Setting current (3-element)*1 Range (A)	Ordering code	Range (A)	Ordering code	Reset	Contact
TR-0/3	0.24–0.36 0.48–0.72 0.8–1.2 0.95–1.45 1.4–2.2 1.7–2.6 2.8–4.2	TB13DW-E TB13DW-H TB13DW-K TB13DW-L TB13DW-M TB13DW-N TB13DW-R	4–6 5–8 6–9 7–11 9–13	TB13DW-S TB13DW-T TB13DW-U TB13DW-V TB13DW-W	Manual *2	SPDT
RCa3737-1CNF/3	4–8 8–16 12–18	TC20DF-S TC20DF-V TC20DF-X			Manual	
TR-1SN/3	13–20 20–26	TR26DW-X TR26DW-Y			Manual and auto	1NO+1NC
TR-2NF/3	12–18 18–26 24–36	TR35DW-X TR35DW-B TR35DW-E	28–40 34–50	TR35DW-F TR35DW-G	Manual and auto	
TR-3N/3	24–36 28–40	TR65DW-E TR65DW-F	34–50 45–67	TR65DW-G TR65DW-J	Manual and auto	

Notes: *1 2-element is also available on request.
*2 Auto reset type is available on request. Specify “Auto reset“ when ordering.

Maximum setting ranges at 380–440V AC for starter use

TR-0/3	4–6A	**TR-2N/3**	18–26A (for FW-2S/3H)
RCa3737-1CNF/3	8–16A		34–50A (for FW-3/3H)
TR-1SN/3	13–20A	**TR-3N/3**	45–67A (for FW-4/3H)

■ Characteristic curves (Cold start)

TR-0/3

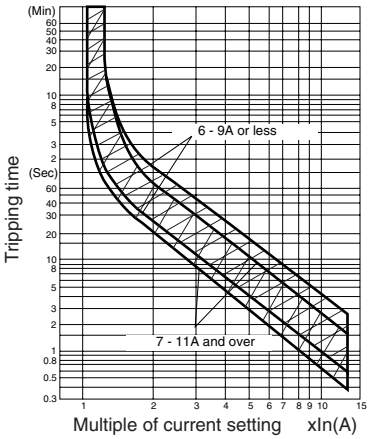

RCa3737-1CNF/3

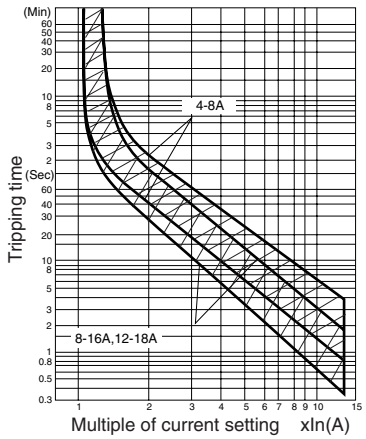

TR-1SN/3

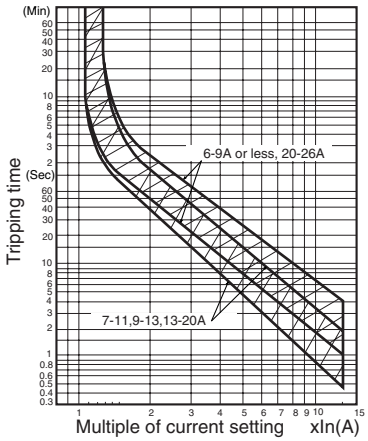

TR-2NF/3

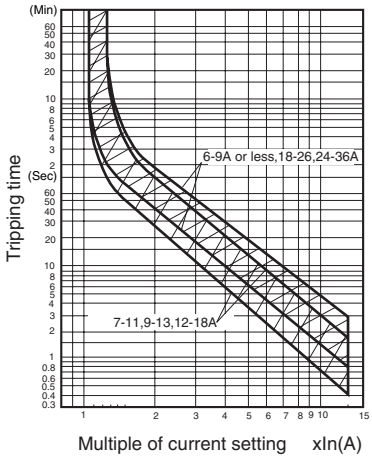

TR-3N/3

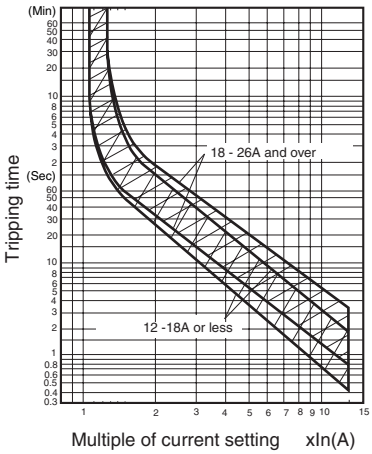

Downloaded from Arrow.com.

Magnetic motor starters with pushbuttons

Up to 4.5kW 440 Volts 3-phase

■ Description

FW series magnetic motor starter is provided with square-shaped ON-OFF pushbuttons. Internal wirings are connected. The starter is housed in a plastic enclosure. The two operating buttons are color-coded; green for ON and red for OFF. Thermal overload relay is fitted with 2 or 3-element and is of manual reset type.

■ Ordering information

Specify the following:
1. Ordering code
2. Operating coil voltage
3. Main circuit voltage.
4. Overload relay setting range code

See page 01/86.

■ Performance data

Same as FW series. *See page 01/84.*

■ Characteristic curves (Cold start)

See page 01/86.

KK01-198

FW-0P/3H

KKD07-354

FW-1P/3H

■ Types and ratings

Max. motor capacity (kW) 3-phase 200-240V	380-440V	Operational current (A) 200-240V	380-440V	2-thermal element Type	Ordering code	3-thermal element Type	Ordering code
3.0	2.5	12	6	**FW-0P**	SF12BPAN-■10T□	**FW-0P/3H**	SF12BPAN-■10T□D
3.5	4.5	15	10	**FW-0SP**	SF15BPAN-■10T□	**FW-0SP/3H**	SF15BPAN-■10T□D
5.5	5.5	20	13	**FW-1P**	SF20BPAN-■11T□	**FW-1P/3H**	SF20BPAN-■11T□D
3.0	2.5	12	6	**FW-0PL**	SF12BKAN-■10T□	**FW-0PL/3H**	SF12BKAN-■10T□D
3.5	4.5	15	10	**FW-0SPL**	SF15BKAN-■10T□	**FW-0SPL/3H**	SF15BKAN-■10T□D

Notes; Auxiliary contact 1NC is available on request. (0P)
Conforming to IEC 60947-4-1 AC-3.
■: Enter the operating coil voltage code.
□: Enter the thermal overload relay ampere setting range code.

■ Thermal overload relay

Type	Setting range (A)	Contact	Starter type
TR-0 (2 or 3-element)	0.24–0.36, 0.48–0.72, 0.8–1.2, 0.95–1.45 1.4–2.2, 1.7–2.6, 2.8–4.2, 4–6, 5–8, 6–9 7–11, 9–13	SPDT 95 — 96, 95 — 98	FW-0P, FW-0P/3H, FW-0PL, FW-0PL/3H, FW-0SP, FW-0SP/3H
TR-5-1N (2 or 3-element)	4–6, 5–8, 6–9, 7–11, 9–13, 12–18	SPDT 95 — 96, 97 — 98	FW-1P, FW-1P/3H

Note: Maximum setting ranges at 440V AC for starter use:
TR-0: 4-6A, RCa3737-1CNF: 8-16A

■ Dimensions, mm

FW-0P, 0PL, 0SP, 0SPL

Plastic enclosure

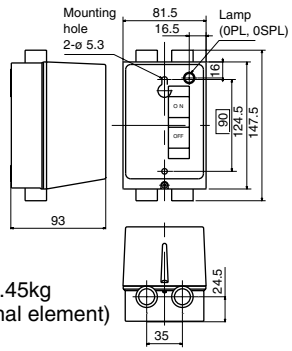

Mass: 0.45kg
(3-thermal element)

FW-1P

Plastic enclosure

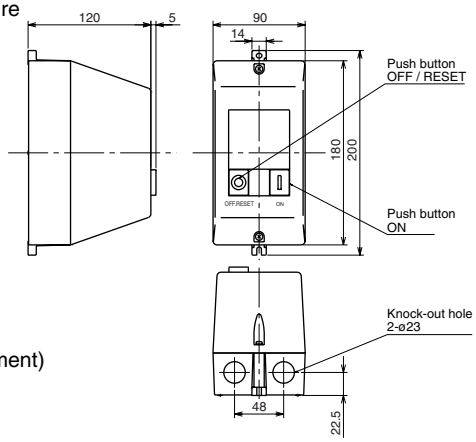

Mass: 0.92kg
(3-thermal element)

■ Wiring diagrams

FW-0P/3H, 0PL/3H, 0SP/3H, 0SPL/3H

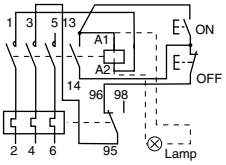

FW-1P/3H

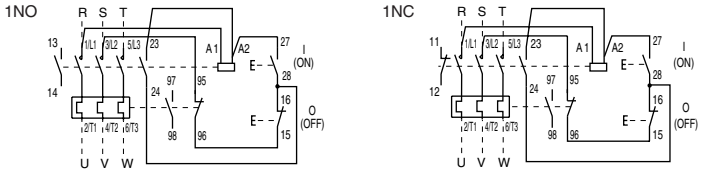

Downloaded from Arrow.com.

Standard type thermal overload relays

■ Description

- Highly reliable thermal overload relays

FUJI thermal overload relays are designed to provide overload protection to meet the thermal characteristics of low voltage induction motors.
Adjustable thermal overload relays give motors positive overcurrent protection.
The starter contacts cannot be held closing under overload conditions.
However, once the bimetal element has cooled, the reset button can be depressed and the motor can be restarted in the normal manner.
Ordinarily this reset is carried out manually but the starter can be changed over to 'automatic reset' by means of a screw-driver.

- FUJI thermal overload relay is subjected to stringent testing in the factory to check performance and actual values are calibrated with the markings on the adjustable dial. Consequently, they provide a positive protection.
- Relays are also provided with ambient temperature compensators, so that their performance will be maintained in spite of temperature changes. The ambient temperature is regulated for 20°C.
- The heater elements are available for either 2- or 3-pole use.

Long time operating type
In the case of loads having large inertia moments such as blowers, winders or centrifuges the starting time is extended.
This will cause the standard-type thermal overload relay to operate during starting so isolating the motor.
If necessary FUJI will supply thermal relays with saturable reactors. (Time-delay type).

Quick operating type overload relays
The windings of submersible pump and compressor motors normally have a smaller overload capacity than those of standard motors, since they are generally cooled by the water and other medium being pumped. Q type overload relays will operate more quickly than the standard type in the face of a locked rotor current.

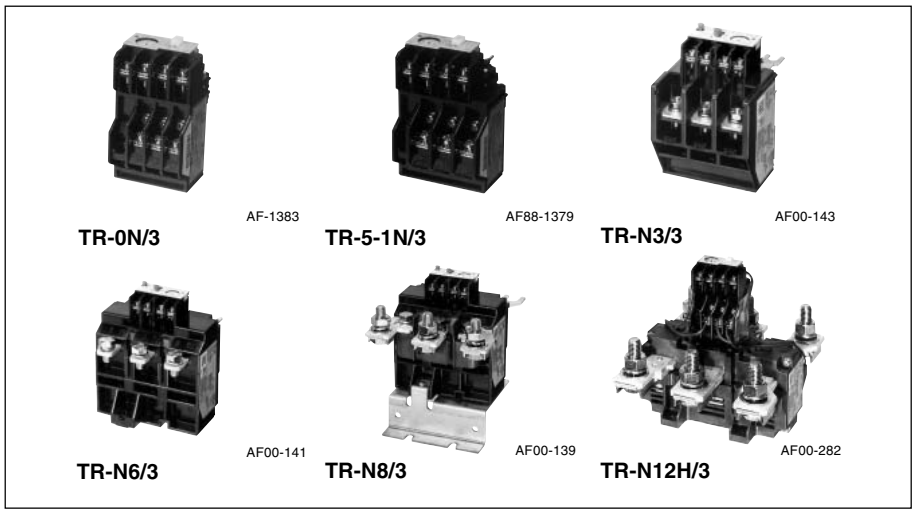

■ Features

- Isolated NO and NC contacts can be used with different potentials.
- Gold-flashed silver contact assures high contact reliability (TR-0N/3 to N14/3).
- Stable operating characteristics protect motors from burnout due to overload or locked rotor currents.
- Easy setting of current value with a calibrated dial.
- Both manual and auto reset available. A manual trip button is provided to facilitate sequence testing.
- Mechanical trip indication
- Trip-free mechanism is provided.
- Reset release button and trip indicator are optional accessories.

■ Warning

All FUJI thermal overload relays have been tested and calibrated at the factory.
They should not be tampered with or stripped down at the job site since this would affect their accuracy. A special feature of the FUJI starter series is the ease by which the relay current ratings can be varied to match the requirements of the load.
The changeover is effected by simply turning a dial to the new value required.
The range of adjustment is approximately 100%–125%–150% and details are given overleaf.

■ Ordering information

Specify the following:
1. Ordering code
2. Setting range code

See page 01/89.

■ Type number nomenclature

TR–0N□H/3A

Basic type
TR: Standard type
TK: With phase-loss protective device

Frame size
0N to N14

Operation
Blank: Standard operation
L: Long time operation
Q: Quick operation

Reset
Blank: Manual reset
A: Auto reset

No. of heater elements
Blank: 2-element (TR)
3-element (TK, TR-Q)
3: 3-element (TR)

Mounting
Blank: On-contactor mounting
H: Separate mounting

Downloaded from Arrow.com.

■ Ordering code system

T	R	2 0	B	N	W	—	T	A
①	②	③④	⑤	⑥	⑦		⑧	⑨

① Product category

Description	Code
Thermal overload relay	T

② Series category

Description	Code
TR-N□ series	R

③④ Frame size

Frame size	Code	
	③	④
0N	1	3
5-1N	2	0
N2	3	5
N3	6	5
N5	9	3
N6	1	C
N7	1	F
N8	1	J
N10	2	C
N12	4	A
N14	6	A

⑤ Index

Type	Code
TR-0N, 5-1N	Blank
TR-N2 to N14	B

⑥ Version

Description	No. of element	Code
Standard	2	N
	3	D
Long time operation	2	L
	3	F
Quick operation	3	S
With phase-loss	3	E

⑦ Mounting

Description	Code
On-contactor mounting	W
Separate mounting	H

⑨ Reset

Description	Code
Manual reset	Blank
Auto reaet	A

⑧ Thermal overload relay ampere setting range

Ampere setting range (A)	Code
0.1 — 0.15	A
0.13 — 0.2	B
0.15 — 0.24	C
0.2 — 0.3	D
0.24 — 0.36	E
0.3 — 0.45	F
0.36 — 0.54	G
0.48 — 0.72	H
0.64 — 0.96	J
0.8 — 1.2	K
0.95 — 1.45	L
1.4 — 2.2	M
1.7 — 2.6	N
2.2 — 3.4	P
2.8 — 4.2	R
4 — 6	S
5 — 8	T
6 — 9	U
7 — 11	V
9 — 13	W
12 — 18	X
16 — 22	Q
18 — 26	B
24 — 36	E
28 — 40	F
32 — 42	I
34 — 50	G
45 — 65	J
48 — 68	O
53 — 80	L
65 — 95	M
85 — 105	I
85 — 125	N
110 — 160	P
125 — 185	R
160 — 240	S
200 — 300	T
240 — 360	U
300 — 450	V
400 — 600	W

Ordering example

① Thermal overload relay ..... T
② TR-□N series ..... R
③④ Frame size: 5-1N 20
⑤ Index ..... Blank
⑥ Standard type, 3-element ..... D
⑦ On-contactor mounting ..... W
—
⑧ Ampere setting range 4-6A ..... S
⑨ Auto reset ..... A

TR20DW-SA

① Thermal overload relay ..... T
② TR-N□ series ..... R
③④ Frame size: N3 65
⑤ Index ..... B
⑥ With phase-loss protection ..... E
⑦ On-contactor mounting ..... W
—
⑧ Ampere setting range 24-36A ..... E
⑨ Manual reset ..... Blank

TR65BEW-E

Downloaded from Arrow.com.

■ Features

● Manual trip

These relays can be manually tripped for sequence inspection by pressing manual trip bar (TR-0N/3, TR-5-1N/3). A sequence inspection will be performed when the test button is pulled out. When the test button is pressed in, only the NC contact will turn OFF. The original status will be restored when the test button is then released.(TR-N2/3 to N8/3)

● Trip-free mechanism

Even if the reset button is carelessly pressed, this relay trips without trouble (Trip-free mechanism).

● Easy visual checking of operating status

Trip indicator and manual trip bar permit visual check of tripping status.

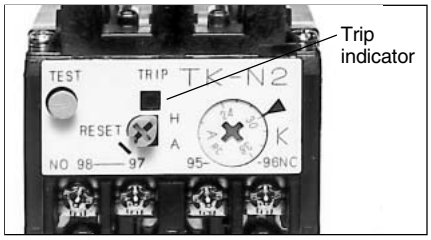

● Dial ampere setting

The setting dial uses a RC (Rated Current) marking which is set to the motor full load current.

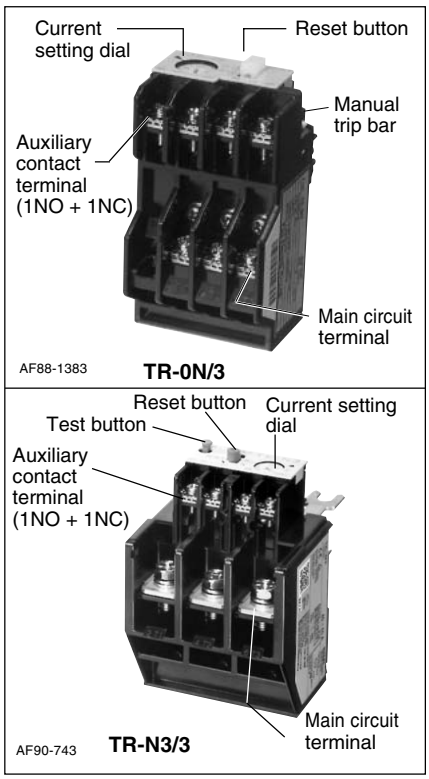

■ Versatile optional accessories

Trip indicator

AF00-291

Reset release

AF00-585

Base unit for separate mounting

AF00-159

■ Optional accessories

Description		Type	Ordering code	Used with thermal overload relay
Reset release You can reset these relays remotely on the front panels of switchboards.	Lead length 300 mm 500 mm 700 mm	**SZ-R1** **SZ-R2** **SZ-R3**	TZ1R1 TZ1R2 TZ1R3	TR-0N/3, TR-5-1N/3, TK-0N, TK-5-1N TR-N10 to N14, TK-N10 to N14
	Lead length 300 mm 500 mm 700 mm	**SZ-R4** **SZ-R5** **SZ-R6**	TZ2R4 TZ2R5 TZ2R6	TR-N2/3 to N8/3, TK-N2 to N8
Trip indicator	100–110V AC 50/60Hz 200–220V AC 50/60Hz	**SZ-L100** **SZ-L200**	TZ1L100 TZ1L200	TR-0N/3, TR-5-1N/3, TK-0N, TK-5-1N TR-N10 to N14, TK-N10 to N14
Easier checking of trip status	100–110V AC 50/60Hz 200–220V AC 50/60Hz	**SZ-L100N2** **SZ-L200N2**	TZ2L100N2 TZ2L200N2	TR-N2/3 to N8/3, TK-N2 to N8
Dial cover For protection against the current setting being changed in error		**SZ-DA**	SZ1DA	TR-0N/3, TR-5-1N/3, TK-0N, TK-5-1N TR-N2/3 to N14/3, TK-N2 to N14
Base unit for separate mounting The unit can be screw-mounted and rail-mounted.		**SZ-HB**	TZ1HB	TR-0N/3, TK-0N
		SZ-HC	TZ1HC	TR-5-1N/3, TK-5-1N
		SZ-HD	TZ2HD	TR-N2/3, TK-N2
		SZ-HE	TZ2HE	TR-N3/3, TK-N3
Terminal cover		**SZ-T10**	SZ1T10	Base unit for separate mounting SZ-HB
		SZ-T11	SZ1T11	Base unit for separate mounting SZ-HC
		SZ-T14	SZ2T14	For separate mounting TR-N2H/3, TK-N2H
		SZ-T15	SZ2T15	For separate mounting TR-N3H/3, TK-N3H
		SZ-RN6T	SZ2RN6T	For separate mounting TR-N6H/3, TK-N6H
		SZ-T12	TZ1T12	TR-0N/3, TK-0N
		SZ-T13	TZ1T13	TR-5-1N/3, TK-5-1N
		SZ-T16	SZ2T16	TR-N2/3, TK-N2
		SZ-T17	SZ2T17	TR-N3/3, TK-N2

Downloaded from Arrow.com.

■ Selection guide/Standard type

On-contactor mounting	3-element	**TR-0N/3** (TR13DW)		**TR-5-1N/3** (TR20DW)		**TR-N2/3** (TR35BDW)		**TR-N3/3** (TR65BDW)	
	2-element	**TR-0N** (TR13NW)		**TR-5-1N** (TR20NW)		**TR-N2** (TR35BNW)		**TR-N3** (TR65BNW)	
Separate mounting	3-element	**TR-0NH/3** (TR13DH)		**TR-5-1NH/3** (TR20DH)		**TR-N2H/3** (TR35BDH)		**TR-N3H/3** (TR65BDW)	
	2-element	**TR-0NH** (TR13NH)		**TR-5-1NH** (TR20NH)		**TR-N2H** (TR35BNH)		**TR-N3H** (TR65BNW)	
Contactor to be combined		SC-03	SC-0 SC-05	SC-4-0	SC-4-1 SC-5-1	SC-N1	SC-N2	SC-N2S	SC-N3
Ampere setting range (A) **Code**	**A**	0.1 – 0.15	0.1 – 0.15	0.1 – 0.15	0.1 – 0.15				
	B	0.13 – 0.2	0.13 – 0.2	0.13 – 0.2	0.13 – 0.2				
	C	0.15 – 0.24	0.15 – 0.24	0.15 – 0.24	0.15 – 0.24				
	D	0.2 – 0.3	0.2 – 0.3	0.2 – 0.3	0.2 – 0.3				
	E	0.24 – 0.36	0.24 – 0.36	0.24 – 0.36	0.24 – 0.36				
	F	0.3 – 0.45	0.3 – 0.45	0.3 – 0.45	0.3 – 0.45				
	G	0.36 – 0.54	0.36 – 0.54	0.36 – 0.54	0.36 – 0.54				
	H	0.48 – 0.72	0.48 – 0.72	0.48 – 0.72	0.48 – 0.72				
	J	0.64 – 0.96	0.64 – 0.96	0.64 – 0.96	0.64 – 0.96				
	K	0.8 – 1.2	0.8 – 1.2	0.8 – 1.2	0.8 – 1.2				
	L	0.95 – 1.45	0.95 – 1.45	0.95 – 1.45	0.95 – 1.45				
	M	1.4 – 2.2	1.4 – 2.2	1.4 – 2.2	1.4 – 2.2				
Specify the setting range code when ordering.	**N**	1.7 – 2.6	1.7 – 2.6	1.7 – 2.6	1.7 – 2.6				
	P	2.2 – 3.4	2.2 – 3.4	2.2 – 3.4	2.2 – 3.4				
	R	2.8 – 4.2	2.8 – 4.2	2.8 – 4.2	2.8 – 4.2				
	S	4 – 6	4 – 6	4 – 6	4 – 6	4 – 6	4 – 6		
	T	5 – 8	5 – 8	5 – 8	5 – 8	5 – 8	5 – 8		
	U	6 – 9	6 – 9	6 – 9	6 – 9	6 – 9	6 – 9		
	V	7 – 11	7 – 11	7 – 11	7 – 11	7 – 11	7 – 11	7 – 11	7 – 11
	W		9 – 13	9 – 13	9 – 13	9 – 13	9 – 13	9 – 13	9 – 13
	X			12 – 18	12 – 18	12 – 18	12 – 18	12 – 18	12 – 18
	Q				16 – 22				
	B					18 – 26	18 – 26	18 – 26	18 – 26
	E					24 – 36	24 – 36	24 – 36	24 – 36
	F							28 – 40	28 – 40
	I						32 – 42		
	G							34 – 50	34 – 50
	J							45 – 65	45 – 65
	O								48 – 68
	L								53 – 80*
	M								65 – 95*
	I								85 – 105*

On-contactor mounting	3-element	**TR-N5/3** (TR80BDW)		**TR-N6/3** (TR1CBDW)	**TR-N7/3** (TR1FBDW)	**TR-N8/3** (TR1JBDW)	**TR-N10/3** (TR2CBDW)	**TR-N12/3** (TR4ABDW)		**TR-N14/3** (TR8ABDW)
	2-element	**TR-N5** (TR80BNW)		**TR-N6** (TR1CBNW)	**TR-N7** (TR1FBNW)	**TR-N8** (TR1JBNW)	**TR-N10** (TR2CBNW)	**TR-N12** (TR4ABNW)		**TR-N14** (TR8ABNW)
Separate mounting	3-element	–		**TR-N6H/3** (TR1CBDW)	–	–	**TR-N10H/3** (TR2CBDH)	**TR-N12H/3** (TR4ABDH)		**TR-N14H/3** (TR8ABDH)
	2-element	–		**TR-N6H** (TR1CBNW)	–	–	**TR-N10H** (TR2CBNH)	**TR-N12H** (TR4ABNH)		**TR-N14H** (TR8ABNH)
Contactor to be combined		SC-N4	SC-N5A	SC-N6	SC-N7	SC-N8	SC-N10	SC-N11	SC-N12	SC-N14
Ampere setting range (A) **Code**	**B**	18 – 26	18 – 26							
	E	24 – 36	24 – 36							
	F	28 – 40	28 – 40							
	G	34 – 50	34 – 50							
	J	45 – 65	45 – 65	45 – 65	45 – 65					
	L	53 – 80	53 – 80	53 – 80	53 – 80					
	M		65 – 95	65 – 95	65 – 95	65 – 95				
	I		85 – 105							
	N			85 – 125	85 – 125	85 – 125	85 – 125			
	P			110 – 160*	110 – 160	110 – 160	110 – 160	110 – 160	110 – 160	
	R					125 – 185	125 – 185	125 – 185	125 – 185	
	S						160 – 240	160 – 240	160 – 240	
	T							200 – 300	200 – 300	
	U								240 – 360	240 – 360
	V								300 – 450	300 – 450
	W									400 – 600

Notes: • TR-N10/3 to N14/3 types are provided with CTs.
• Max. setting ranges of these starters are as shown in the table on the right.
• When ordering the thermal overload relays for starter use, select the applicable setting range.
( ): Basic ordering code (When ordering phase-loss protective type, enter the version code E instead of D)
* : Separate mounting only

Motor starter	Maximum applicable heater range (A) 200–240V	380–440V
SW-03/3H	7–11	6–9
SW-4-0/3H	12–18	12–18
SW-N1/3H	24–36	24–36
SW-N2S/3H	34–50	34–50
SW-N4/3H	53–80	53–80
SW-N6/3H	85–125	85–125

Downloaded from Arrow.com.

■ Selection guide/Long time operating type

On-contactor mounting	3-element	–		–		**TR-N2L/3** (TR35BFW)		**TR-N3L/3** (TR65BFW)	
	2-element	–		–		**TR-N2L** (TR35BLW)		**TR-N3L** (TR65BLW)	
Separate mounting	3-element	**TR-0NLH/3** (TR13FH)		**TR-5-1NLH/3** (TR20FH)		**TR-N2LH/3** (TR35BFH)		**TR-N3LH/3** (TR65BFH)	
	2-element	**TR-0NLH** (TR13LH)		**TR-5-1NLH** (TR20LH)		**TR-N2LH** (TR35BLH)		**TR-N3LH** (TR65BLH)	
Contactor to be combined		SC-03	SC-0 SC-05	SC-4-0	SC-4-1 SC-5-1	SC-N1	SC-N2	SC-N2S	SC-N3
Ampere setting range (A)	**Code** **L**	0.95 – 1.45	0.95 – 1.45	0.95 – 1.45	0.95 – 1.45				
	M	1.4 – 2.2	1.4 – 2.2	1.4 – 2.2	1.4 – 2.2				
	N	1.7 – 2.6	1.7 – 2.6	1.7 – 2.6	1.7 – 2.6				
	P	2.2 – 3.4	2.2 – 3.4	2.2 – 3.4	2.2 – 3.4				
	R	2.8 – 4.2	2.8 – 4.2	2.8 – 4.2	2.8 – 4.2				
	S	4 – 6	4 – 6	4 – 6	4 – 6	4 – 6	4 – 6		
	T	5 – 8	5 – 8	5 – 8	5 – 8	5 – 8	5 – 8		
	U	6 – 9	6 – 9	6 – 9	6 – 9	6 – 9	6 – 9		
	V	7 – 11	7 – 11	7 – 11	7 – 11	7 – 11	7 – 11	7 – 11	7 – 11
	W		9 – 13	9 – 13	9 – 13	9 – 13	9 – 13	9 – 13	9 – 13
	X			12 – 18	12 – 18	12 – 18	12 – 18	12 – 18	12 – 18
	B					18 – 26	18 – 26	18 – 26	18 – 26
	E						24 – 36	24 – 36	24 – 36
	F							28 – 40	28 – 40
	G							34 – 50	34 – 50
	J								45 – 65
	L								53 – 80*
	M								65 – 95*

On-contactor mounting	3-element	**TR-N5L/3** (TR80BFW)		**TR-N6L/3** (TR1CBFW)	**TR-N7L/3** (TR1FBFW)	**TR-N10L/3** (TR2CBFW)		**TR-N12L/3** (TR4ABFW)		**TR-N14L/3** (TR8ABFW)
	2-element	**TR-N5L** (TR80BLW)		**TR-N6L** (TR1CBLW)	**TR-N7L** (TR1FBLW)	**TR-N10L** (TR2CBLW)		**TR-N12L** (TR4ABLW)		**TR-N14L** (TR8ABLW)
Separate mounting	3-element	–		**TR-N6LH/3** (TR1CBFH)	–	**TR-N10LH/3** (TR2CBFH)		**TR-N12LH/3** (TR4ABFH)		**TR-N14LH/3** (TR8ABFH)
	2-element	–		**TR-N6LH** (TR1CBLH)	–	**TR-N10LH** (TR2CBLH)		**TR-N12LH** (TR4ABLH)		**TR-N14LH** (TR8ABLH)
Contactor to be combined		SC-N4	SC-N5A	SC-N6	SC-N7	SC-N8	SC-N10	SC-N11	SC-N12	SC-N14
Ampere setting range (A)	**Code** **B**	18 – 26	18 – 26							
	E	24 – 36	24 – 36							
	F	28 – 40	28 – 40							
	G	34 – 50	34 – 50							
	J	45 – 65	45 – 65	45 – 65	45 – 65					
Specify the setting range code when ordering.	**L**	53 – 80	53 – 80	53 – 80	53 – 80					
	M		65 – 95	65 – 95	65 – 95					
	N			85 – 125	85 – 125	85 – 125	85 – 125			
	P			110 – 160*	110 – 160	110 – 160	110 – 160	110 – 160	110 – 160	
	R					125 – 185	125 – 185	125 – 185	125 – 185	
	S						160 – 240	160 – 240	160 – 240	
	T							200 – 300	200 – 300	
	U								240 – 360	240 – 360
	V								300 – 450	300 – 450
	W									400 – 600

Notes: Maximum setting ranges of the these starters are as shown in the table below.
Select the applicable setting range when ordering the thermal overload relays for starter use.

( ): Basic ordering code
* : Separate mounting only

Motor starter	Maximum applicable heater range (A) 200–240V	380–440V
SW-03/2L, 3L	7–11	6–9
SW-N2S/2L, 3L	34–50	34–50
SW-N4/2L, 3L	53–80	53–80
SW-N6/2L, 3L	85–125	85–125

Downloaded from Arrow.com.

■ Selection guide/Quick operating type

On-contactor mounting	3-element		**TR-0NQ** (TR13SW)		**TR-5-1NQ** (TR20SW)		**TR-N2Q** (TR35BSW)	
Separate mounting	3-element		–		–		–	
Contactor to be combined			SC-03	SC-0 SC-05	SC-4-0	SC-4-1 SC-5-1	SC-N1	SC-N2
Rated operational current (A)	200–240V		11	13	18	22	27	39
	380–440V		9	12	16	22	30	37
Ampere setting range (A)	**Code**	**M**	1.4 – 2.2	1.4 – 2.2	1.4 – 2.2	1.4 – 2.2		
		N	1.7 – 2.6	1.7 – 2.6	1.7 – 2.6	1.7 – 2.6		
		P	2.2 – 3.4	2.2 – 3.4	2.2 – 3.4	2.2 – 3.4		
		R	2.8 – 4.2	2.8 – 4.2	2.8 – 4.2	2.8 – 4.2		
		S	4 – 6	4 – 6	4 – 6	4 – 6		
Specify the setting range code when ordering.		**T**	5 – 8	5 – 8	5 – 8	5 – 8		
		U	6 – 9	6 – 9	6 – 9	6 – 9		
		V	7 – 11 *1	7 – 11 *1	7 – 11 *1	7 – 11 *1		
		W		9 – 13 *1	9 – 13 *1	9 – 13 *1		
		X			12 – 18 *1	12 – 18 *1	12 – 18	12 – 18
		B					18 – 26	18 – 26
		E						24 – 36

On-contactor mounting	3-element		**TR-N3Q** (TR65BSW)		**TR-N5Q** (TR80SW)	
Separate mounting	3-element		**TR-N3Q** (TR65BSW)		–	
Contactor to be combined			SC-N2S	SC-N3	SC-N4	SC-N5A
Rated operational current (A)	200–240V		52	65	80	105
	380–440V		48	65	80	105
Ampere setting range (A)	**Code**	**B**	18–26	18–26	18–26	18–26
		E	24–36	24–36	24–36	24–36
		F	28–40	28–40	28–40	28–40
		G	34–50	34–50	34–50	34–50
Specify the setting range code when ordering.		**J**		45–65	45–65	45–65
		L		53–80*2	53–80	53–80
		M		65–95*2		65–95

Notes: *1 Thermal overload relay with phase-loss protection is available with *1 marked setting ranges of TR-0NQ, TR-5-1NQ and all setting ranges of TR-N2Q to N5Q.
Type numbers are TK-0NQ, TK-5-1NQ, TK-N2Q to N5Q. The setting ranges of these TK-□Q type relays are as same as those of the above setting ranges.
*2 Separate mounting only.
( ) Basic ordering code

■ Ratings of auxiliary contact

Type	Rated thermal current (A)	Rated voltage (V)	Rated AC operational current (A)	Rated DC operational current (A)
TR-0N, 5-1N TR-0N/3, 5-1N/3 TK-0N, 5-1N TR-0NQ, 5-1NQ	3	24 100-120 200-240 380-440 500-600	3 (0.3)* 2.5 (0.3)* 2 (0.3)* 1 (0.3)* 0.6 (0.3)*	1.1 (0.3)* 0.28 0.14 – –
TR-N2 to N8 TR-N2/3 to N8/3 TK-N2 to N8 TR-N2Q to N5Q	5	24 100-120 200-240 380-440 500-600	3 (0.5)* 2.5 (0.5)* 2 (0.5)* 1 (0.5)* 0.6 (0.5)*	1.1(0.3)* 0.28 0.14 – –
TR-N10 to N14 TR-N10/3 to N14/3 TK-N10 to N14	5	24 100-120 200-240 380-440 500-600	3 (0.3)* 2.5 (0.3)* 2 (0.3)* 1 (0.3)* 0.6 (0.3)*	1.1(0.3)* 0.28 0.14 – –

Notes: Conforming to Class AC-15, DC-13, IEC, JIS, and JEM.
( )* NO contact of auto reset type.

Downloaded from Arrow.com.

■ Dimensions, mm

Standard and quick operating types

TR-0N/3, TR-0NQ
On-contactor mounting

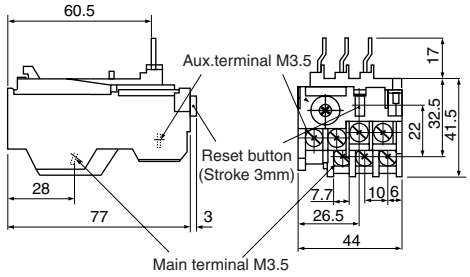

TR-0NH/3

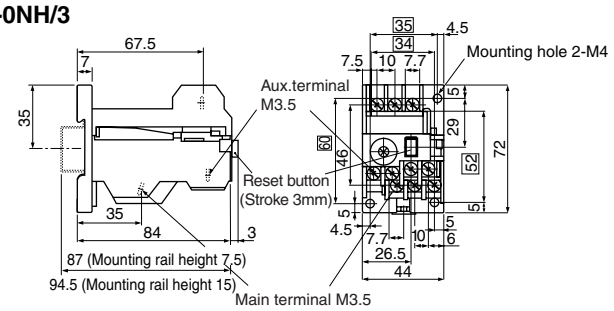

TR-5-1N/3, TR-5-1NQ
On-contactor mounting

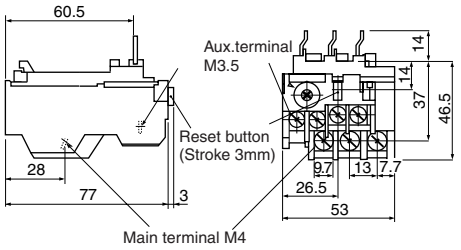

TR-5-1NH/3

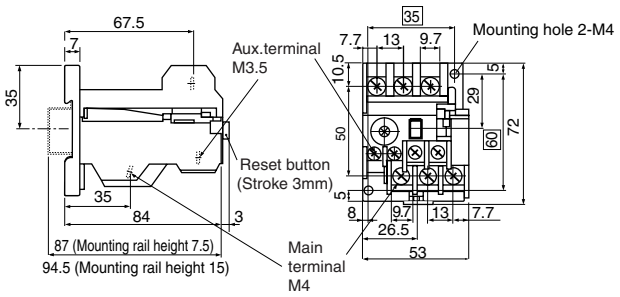

TR-N2/3, TR-N2Q
On-contactor mounting

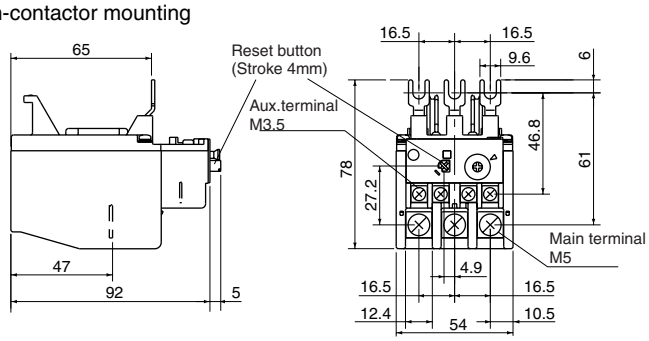

TR-N2H/3

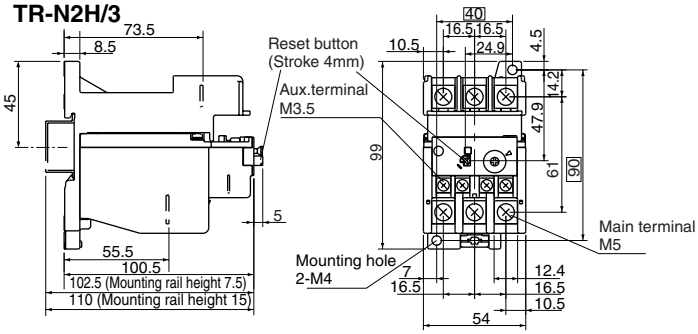

TR-N3/3, TR-N3Q
On-contactor mounting

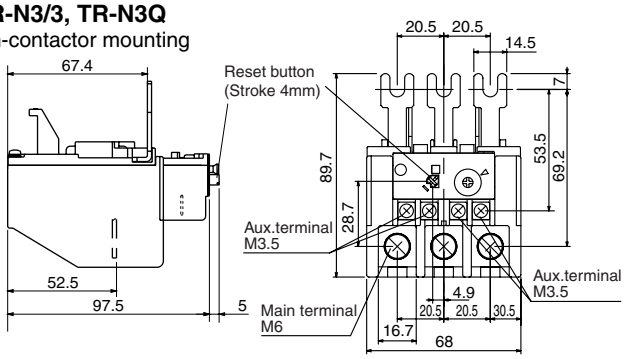

TR-N3H/3

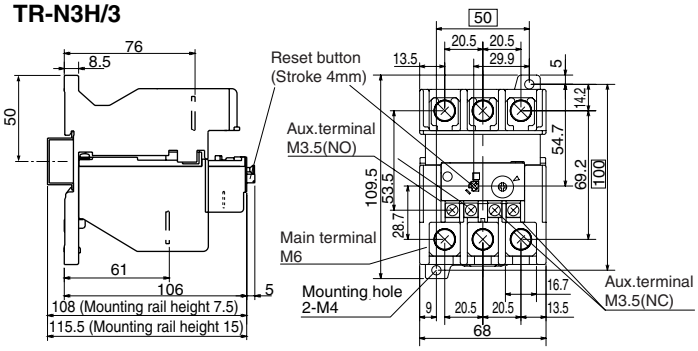

TR-N5/3, TR-N5Q
On-contactor mounting

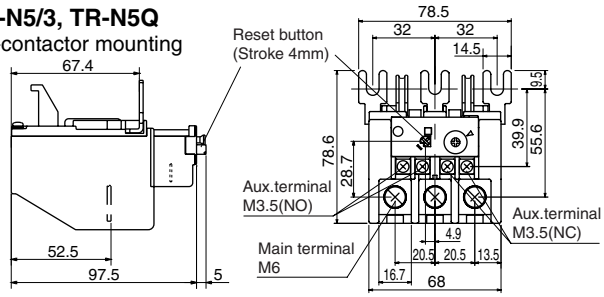

□ : Mounting pitch
Mass: *See page 01/96.*

Downloaded from Arrow.com.

■ Dimensions, mm

Standard and quick operating types

TR-6N/3

On-contactor mounting

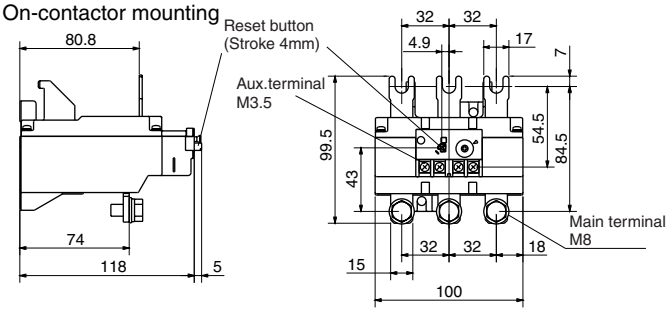

TR-N6H/3

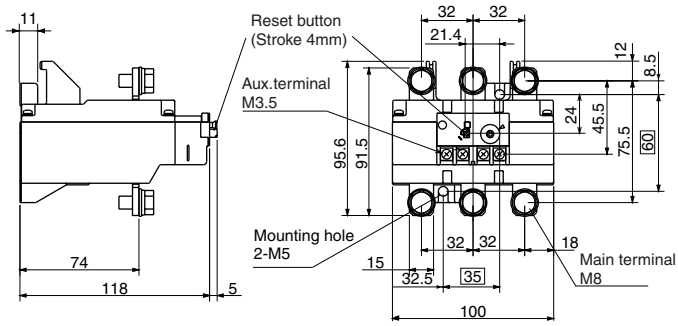

TR-N7/3

On-contactor mounting

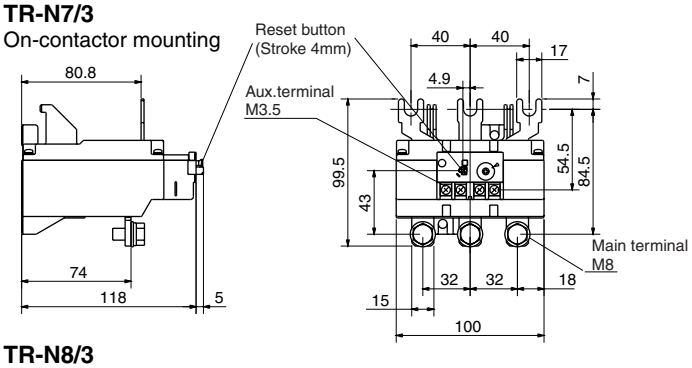

TR-N8/3

On-contactor mounting

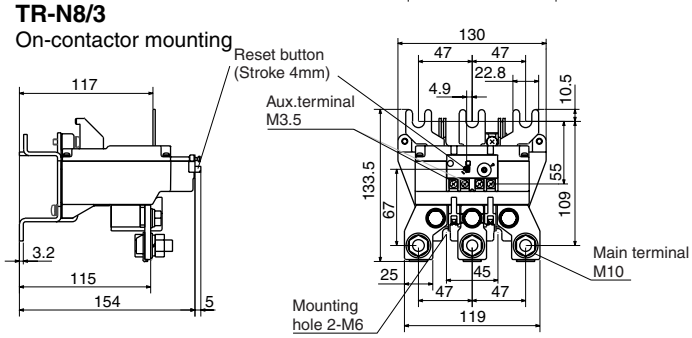

TR-N10/3

On-contactor mounting

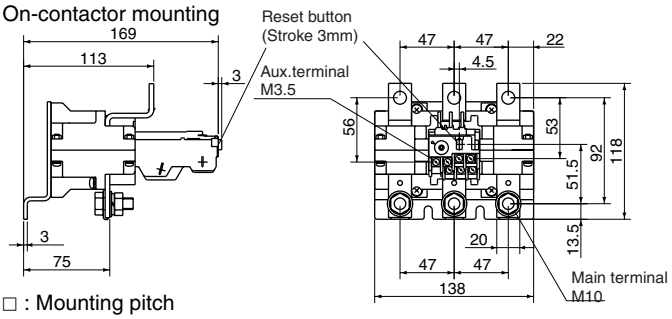

TR-N10H/3

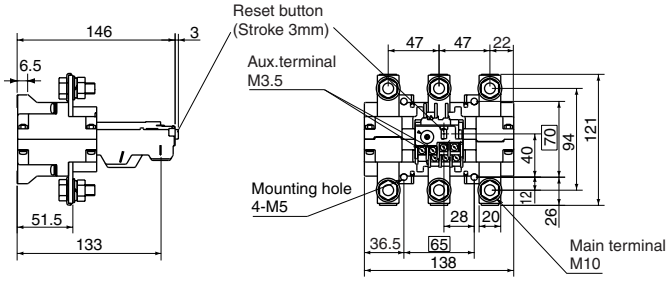

TR-N12/3

On-contactor mounting

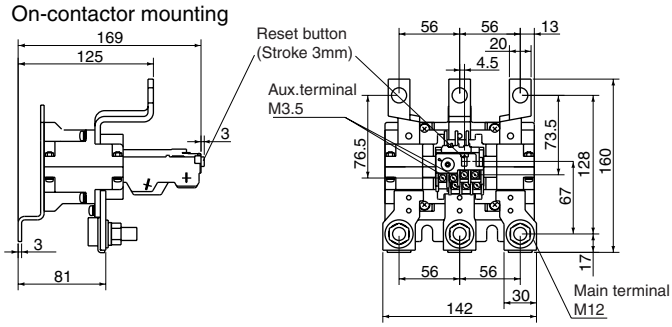

TR-N12H/3

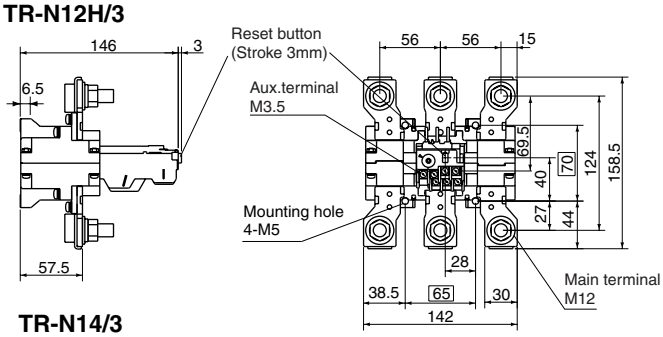

TR-N14/3

On-contactor mounting

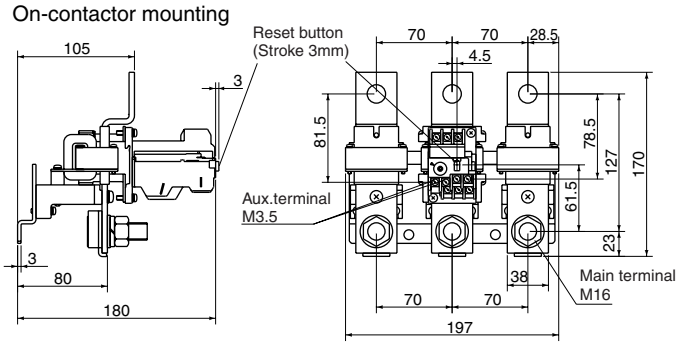

TR-N14H/3

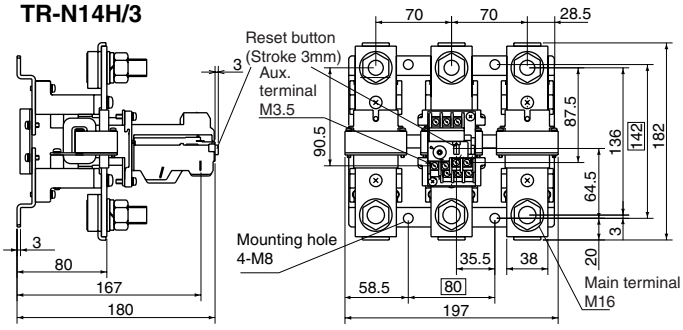

□ : Mounting pitch

Mass: *See page 01/96.*

Downloaded from Arrow.com.

■ Dimensions, mm
Base unit for separate mounting

SZ-HB

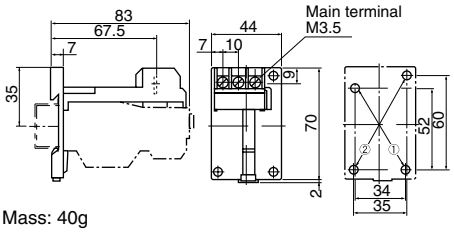

Mass: 40g

SZ-HD

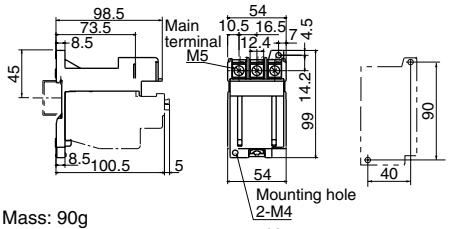

Mass: 90g

SZ-HC

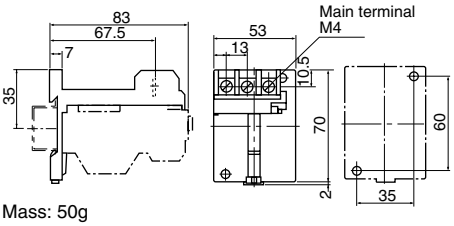

Mass: 50g

SZ-HE

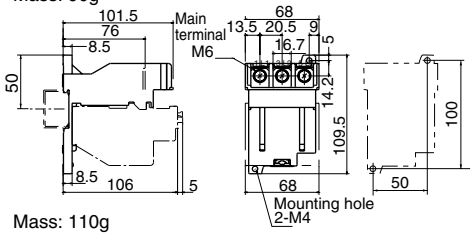

Mass: 110g

■ Mass/Standard and quick operating types

On-contactor mounting Type	Mass	Separate mounting Type	Mass	On-contactor mounting Type	Mass	Separate mounting Type	Mass
TR-0N **TR-0N/3** **TR-0NQ**	0.09kg 0.10kg 0.10kg	**TR-0NH** **TR-0NH/3**	0.13kg 0.14kg	**TR-N7** **TR-N7/3**	0.61kg 0.61kg	–	
TR-5-1N **TR-5-1N/3** **TR-5-1NQ**	0.11kg 0.12kg 0.12kg	**TR-5-1NH** **TR-5-1NH/3**	0.16kg 0.17kg	**TR-N8** **TR-N8/3**	1.2kg 1.2kg	–	
TR-N2, N2/3 **TR-N2Q**	0.2kg 0.2kg	**TR-N2H** **TR-N2H/3**	0.29kg 0.29kg	**TR-N10** **TR-N10/3**	1.85kg 1.85kg	**TR-10NH** **TR-10NH/3**	1.5kg 1.5kg
TR-N3, N3/3 **TR-N3Q**	0.27kg 0.27kg	**TR-N3H, N3H/3**	0.38kg	**TR-N12, N12/3**	2.3kg	**TR-12NH, 12NH/3**	2.25kg
TR-N5, N5/3 **TR-N5Q**	0.27kg 0.27kg	–		**TR-N14, N14/3**	3.5kg	**TR-14NH, 14NH/3**	4kg
TR-N6, N6/3	0.61kg	**TR-N6H, N6H/3**	0.67kg	–		–	

■ Dimensions, mm
Long time operating type

TR-0NLH, 0NLH/3

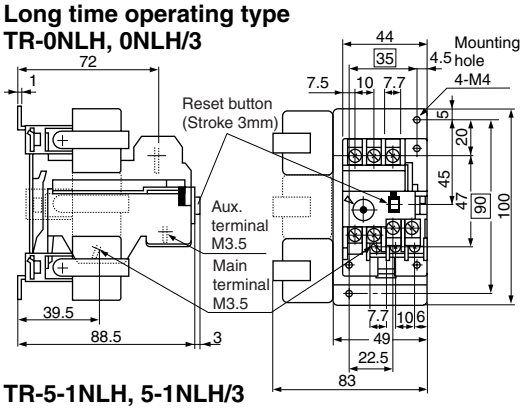

TR-N2L, N2L/3

On-contactor mounting

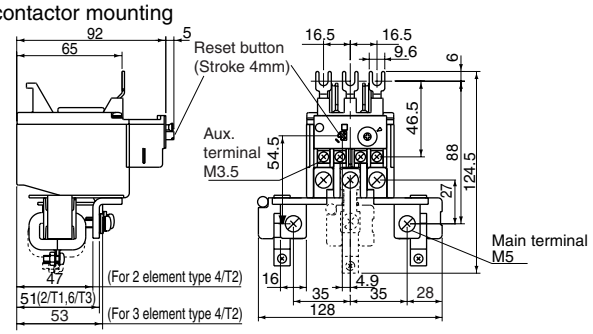

TR-5-1NLH, 5-1NLH/3

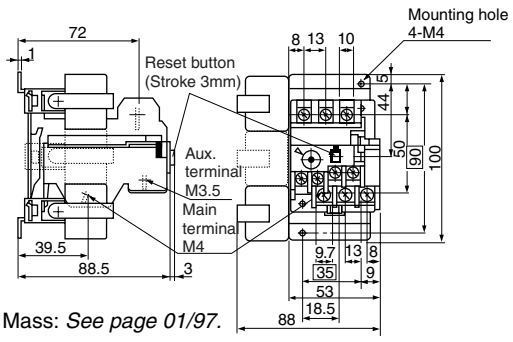

Mass: *See page 01/97.*

TR-N2LH, N2LH/3

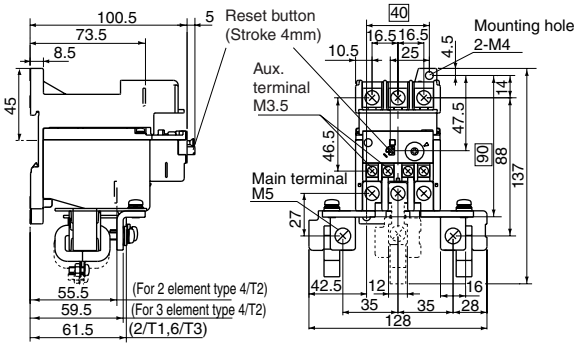

Downloaded from Arrow.com.

■ Dimensions, mm

Long time operating type

TR-N3L, N3L/3

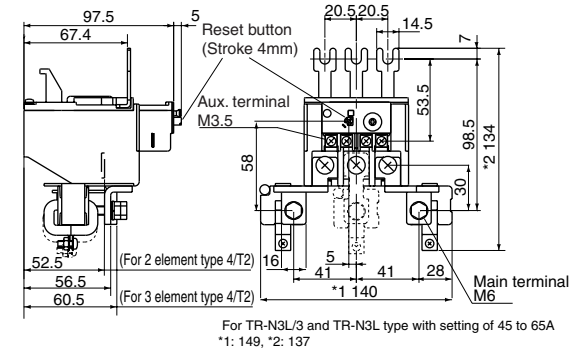

For TR-N3L/3 and TR-N3L type with setting of 45 to 65A
*1: 149, *2: 137

TR-N6L, N6L/3

On-contactor mounting

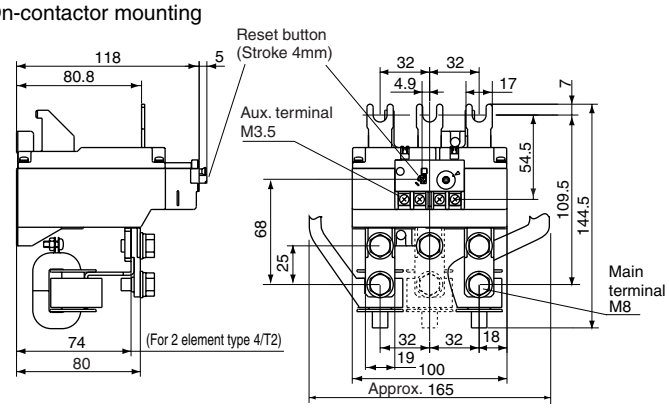

TR-N3LH, N3LH/3

On-contactor mounting

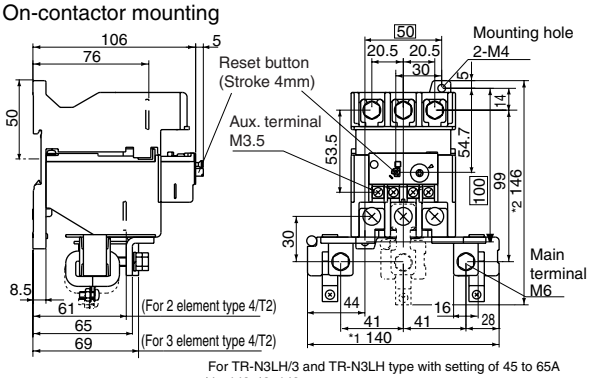

For TR-N3LH/3 and TR-N3LH type with setting of 45 to 65A
*1: :149, *2: 149

TR-N6LH, N6LH/3

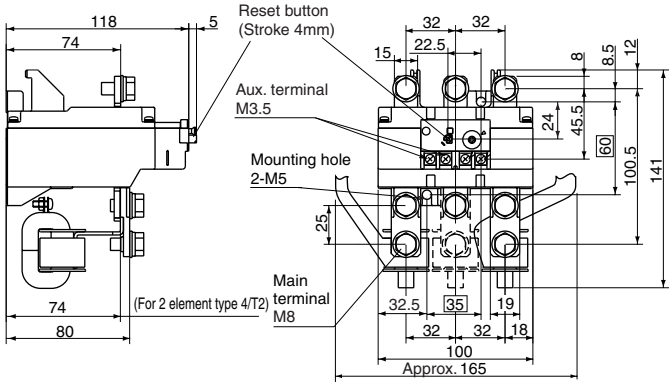

TR-N5L, N5LH/3

On-contactor mounting

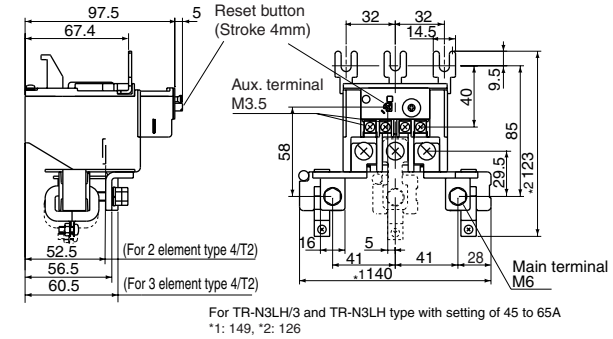

For TR-N3LH/3 and TR-N3LH type with setting of 45 to 65A
*1: 149, *2: 126

TR-N7L, N7L/3

On-contactor mounting

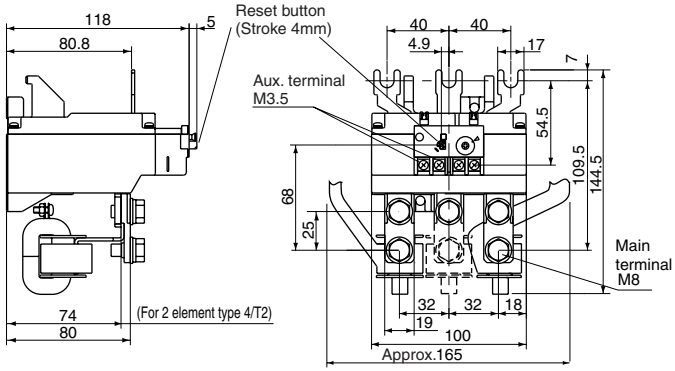

Note: TR-N10L, N10LH, N12NL, N12LH, N14L and N14LH types have the same dimensions as standard types. *See pages 01/105.*

■ Mass/Long time operating type

On-contactor mounting Type	Mass	Separate mounting Type	Mass	On-contactor mounting Type	Mass	Separate mounting Type	Mass
–		**TR-0NLH** **TR-0NLH/3**	0.4kg 0.5kg	**TR-N6L** **TR-N6L/3**	1.54kg 1.85kg	**TR-N6LH** **TR-N6LH/3**	1.6kg 1.91kg
–		**TR-5-1NLH** **TR-5-1NLH/3**	0.42kg 0.52kg	**TR-N7L** **TR-N7L/3**	1.54kg 1.85kg	–	
TR-N2L **TR-N2L/3**	0.56kg 0.68kg	**TR-N2LH** **TR-N2LH/3**	0.65kg 0.77kg	**TR-N10L** **TR-N10L/3**	1.85kg 1.85kg	**TR-N10LH** **TR-N10LH/3**	1.5kg 1.5kg
TR-N3L **TR-N3L/3**	0.63kg 0.77kg	**TR-N3LH** **TR-N3LH/3**	0.74kg 0.88kg	**TR-N12L** **TR-N12L/3**	2.3kg 2.3kg	**TR-N12LH** **TR-N12LH/3**	2.25kg 2.25kg
TR-N5L **TR-N5L/3**	0.63kg 0.77kg	–		**TR-N14L** **TR-N14L/3**	3.5kg 3.5kg	**TR-N14LH** **TR-N14LH/3**	4kg 4kg

Downloaded from Arrow.com.

■ Dimensions, mm

Optional accessories

Trip indicator

SZ-L100
SZ-L200

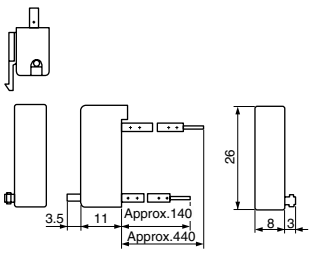

SZ-L100N2
SZ-L200N2

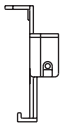

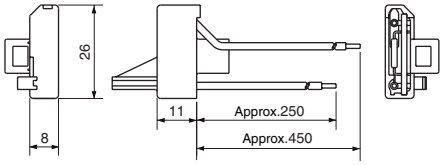

Reset release button

SZ-R1
SZ-R2
SZ-R3

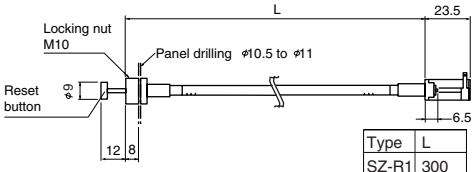

Type	L
SZ-R1	300
SZ-R1	500
SZ-R1	700

SZ-R4
SZ-R5
SZ-R6

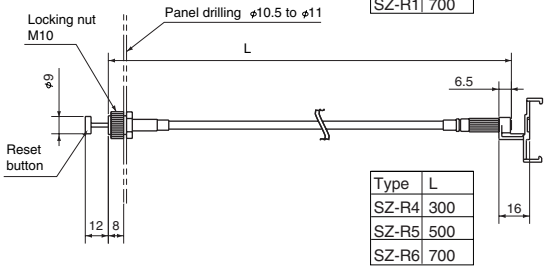

Type	L
SZ-R4	300
SZ-R5	500
SZ-R6	700

Dial cover

SZ-DA

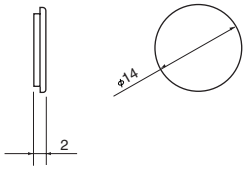

■ Characteristic curves

These curves show cold starting characteristics.

● Standard type

TR-0N, 5-1N,
TR-0N/3, 5-1N/3,
TR-0NH, 5-1NH,
TR-0NH/3, 5-1NH/3

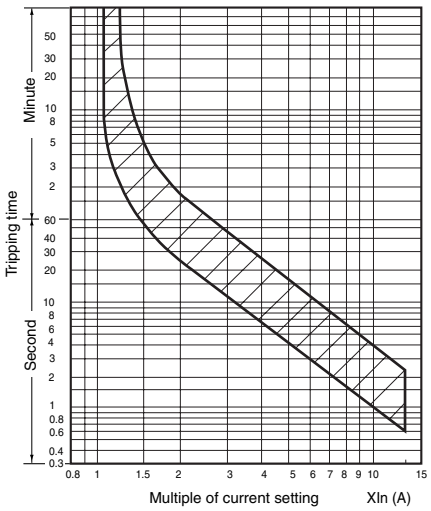

TR-N2 to N8
TR-N2/3 to N8/3
TR-N2H, N3H, N6H
TR-N2H/3, N3H/3, N6H/3

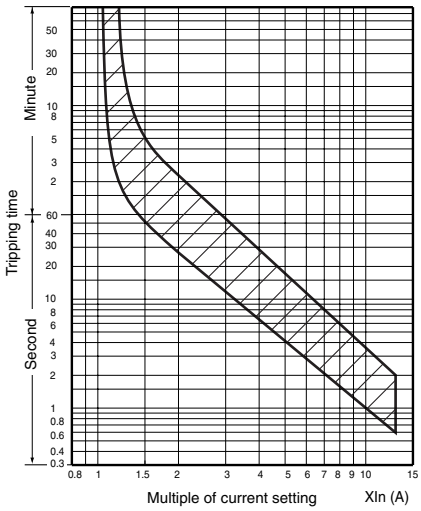

TR-N10 to N14,
TR-N10/3 to N14/3,
TR-N10H to N14H
TR-N10H/3 to N14H/3

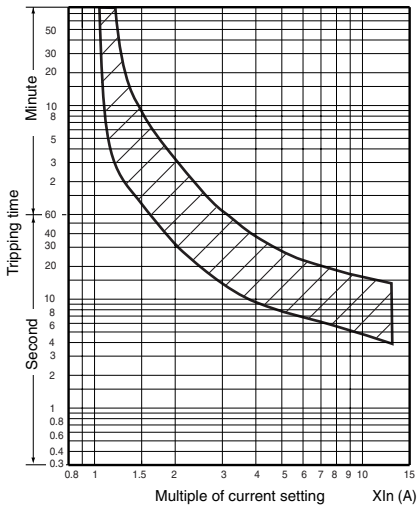

■ Wiring diagrams

● Standard type

TR-0N to N8
TR-0N/3 to N8/3
TR-0NH, 5-1NH, N2H, N3H, N6H
TR-0NH/3, 5-1NH/3, N2H/3, N3H/3, N6H/3

2-element

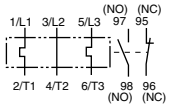

3-element

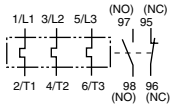

TR-N10 to N14
TR-N10/3 to N14/3
TR-N10H to N14H
TR-N10H/3 to N14H/3

2-element
(with CTs)

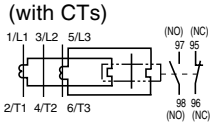

3-element
(with CTs)

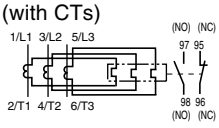

Downloaded from Arrow.com.

■ Characteristic curves
These curves show cold starting characteristics

● Long time operating type
(When setting at the center dial current)

TR-0NL, 5-1NL
TR-0NL/3, 5-1NL/3
TR-0NLH, 5-1NLH
TR-0NLH/3, 5-1NLH/3

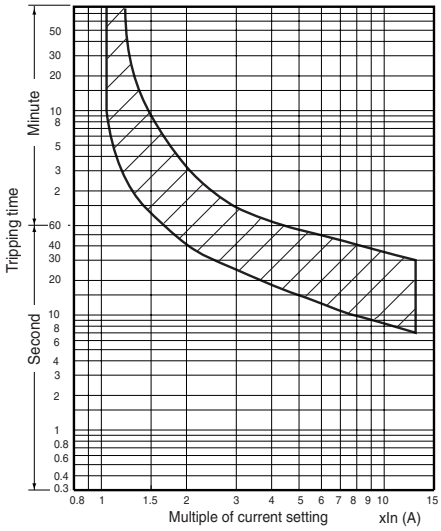

TR-N2L to N7L
TR-N2L/3 to N7L/3
TR-N2LH, N3LH, N6LH
TR-N2LH/3, N3LH/3, N6LH/3

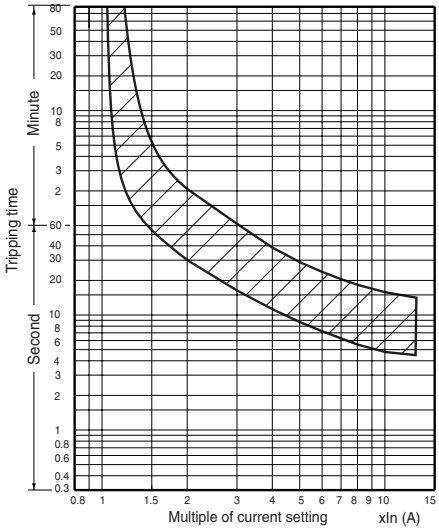

TR-N10L to N14L
TR-N10L/3 to N14L/3
TR-N10LH to N14LH
TR-N10LH/3 to N14LH/3

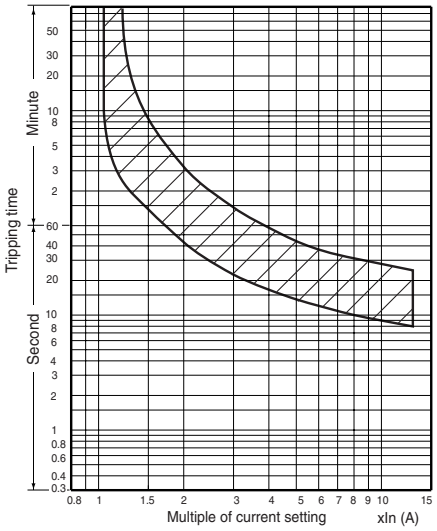

● Quick operating type

TR-0NQ, 5-1NQ

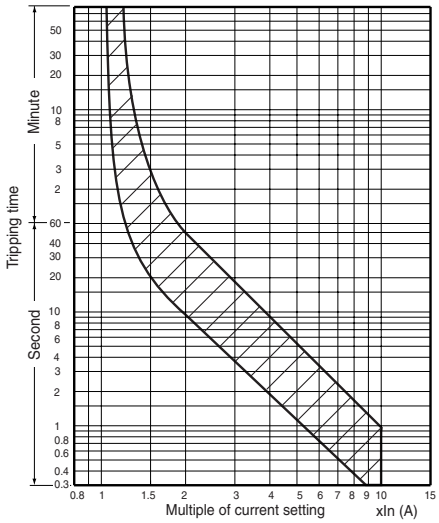

TR-N2Q, N3Q, N5Q

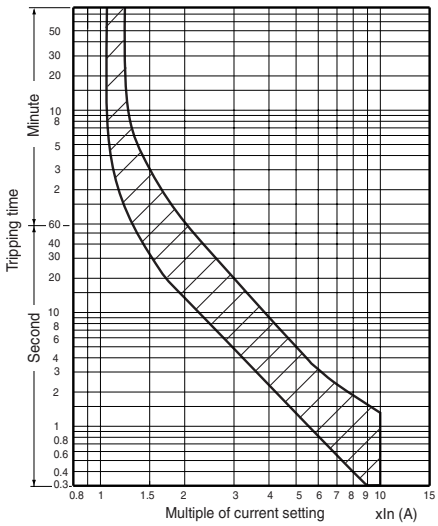

■ Wiring diagrams

● Long time operating type

TR-0NL to N7L
TR-0NL/3 to N7L/3
TR-0NLH, 5-1NLH, N2LH, N3LH, N6LH
TR-0NLH/3, 5-1NLH/3, N2LH/3, N3LH/3, N6LH/3

2-element

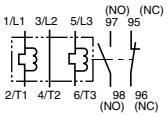

3-element

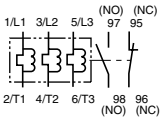

TR-N10L to N14L
TR-N10L/3 to N14L/3
TR-N10LH to N14LH
TR-N10LH/3 to N14LH/3

2-element (with CTs)

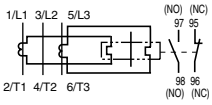

3-element (with CTs)

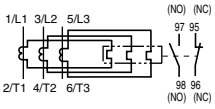

● Quick operating type

TR-0NQ, 5-1NQ
TR-N2Q, N3Q, N5Q

3-element

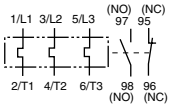

Downloaded from Arrow.com.

TK series
With phase-loss protective device

Thermal overload relays with phase-loss protective device

■ Description

FUJI TK series consists of a 3-heater element thermal overload relay and an phase-loss protective device. These two elements are assembled to make the relay unit. The overload relay characteristics are designed to meet the thermal characteristics of a squirrel-cage motors at the time of overload. A FUJI ADL mechanism is also provided to protect from phase-loss. This ADL mechanism is incorporated with the overload relay.
The characteristics are coordinated with the temperature rise curve in stator winding at the time of motor phase-loss. They respond quickly to overloads.
Other features include the following.

TK-5-1N AF88-1380

TK-N6 AF00-141

A trip-free mechanism, wide-range dial ampere adjustment, manual/auto reset chageover lever, operating indicator, and ambient temperature compensators.
Types are available ranging from TK-0N to TK-N14.

■ Ordering information

Specify the following:
1. Ordering code

See pages 01/89.

■ Characteristics

The operating characteristics of a thermal overload relays
represents its tripping time and response current starting from
cold or hot state.

Cold starting characteristics

In cold starting, tripping time is measured from the time when
the temperature of the thermal overload relay is equal to the
ambient temperature.

Hot starting characteristics

In hot starting, tripping time is measured from the time when
the thermal overload relay reaches the steady state after non-tripping current flows two hours.

Standard	When all poles are equally energized				When all poles are not equally energized			Ambient temp.
	Operating limit Non-tripping	Tripping	Overload (hot start)	Locked rotor (cold start)	Phase-loss protection	Operating limit Non-tripping	Tripping Hot start	
IEC 60947-4-1	105% Ie	120% Ie (2h max.)	class 10A 150% Ie 2min max.	class 10A 720% Ie 2 to 10s max.	Not provided	3-phase: 105% Ie	2-phase: 132% Ie	20˚C
			class 10 150% Ie 4min max.	class 10 720% Ie 4 to 10s max.			1-phase: 0 2h max.	
			class 20 150% Ie 8min max.1-phase:	class 20 720% Ie 6 to 20s max.	Provided	2-phase: 100% Ie	2-phase: 115% Ie	
			class 30 150% Ie 12min max.	class 30 720% Ie 9 to 30s max. *		1-phase: 90% Ie	1-phase: 0 2h max.	

TK-0N, 5-1N
TK-0NH, 5-1NH

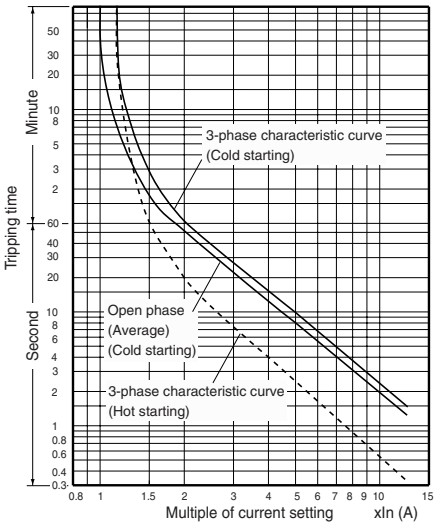

TK-N2, N3, N5, N6, N7, N8
TK-N2H, N3H, N6H

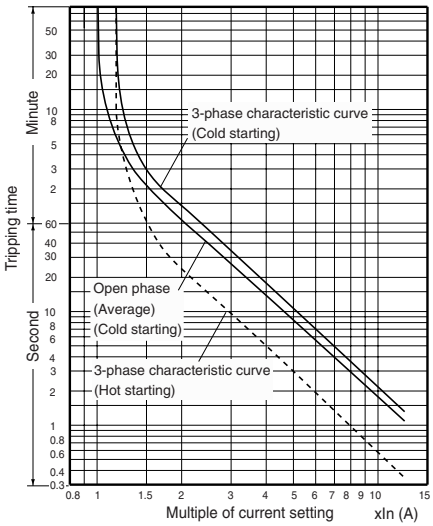

TK-N10, N12, N14
TK-N10H, N12H, N14H

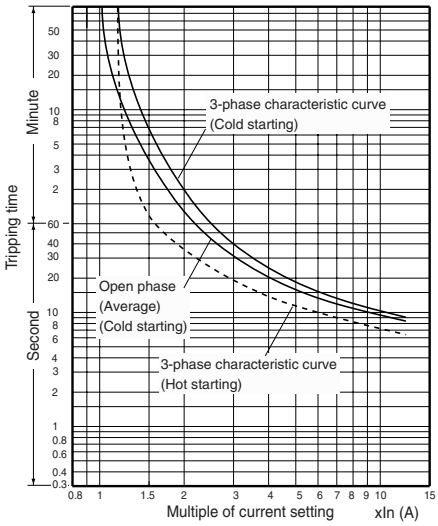

■ Dimensions, mm

TK-0N to N14 types:
Same as standard types
See pages 01/94, 01/95.

■ Wiring diagrams

TK-0N to N14 types:
Same as standard 3-heater element types
See pages 01/98.

■ Ratings of auxiliary contact

Same as standard types.
See Page 01/93.

Downloaded from Arrow.com.

Solid-state contactors
General use

■ Description

Solid-state contactors (SSC) are required in cases where contacts must have long life because contacts are frequently made and broken, and where contactor noise must be eliminated. Single-and 3-pole solid-state contactors incorporate thyristors as making and breaking elements in the main circuit.

Single-pole type **3-pole type**

KKD05-253

SS101

AF91-622

SS1501

KKD06-043

SS083

KKD06-045

SS803

■ Features

- **Operation indicator provided**
  An operation indicator LED (red) is provided as a standard feature for all models, so you can easily check whether a control voltage is applied to the SSC.
- **Long service life, optimum for highly frequent switching**
  The solid-state contactor utilizes high-performance semiconductor switch elements to include the functions and features of conventional magnetic contactors. The SSC, featuring long life, low-noise, and high-speed response, is suitable for highly frequent switching of various types of loads, such as motors and heaters.
- **Built-in surge suppressor**
  Varistors and C-R circuits are included so that surge voltage due to SSC switching and lightening can be suppressed to protect the control and main circuits.
- **AC and DC operation**
  The AC and DC operated type SSCs are available, either of which can be selected as required.
- **SSC with zero-cross switching function**
  The SSC is also available with a zero-cross switching function to enable load current switching at the point where the line voltage is near zero to suppress excessive inrush current in the load circuit.
- **Built-in auxiliary contact**
  An auxiliary contact module using semiconductor switches or relay contacts is included. Therefore an auxiliary output signal can easily be obtained without using a separate auxiliary devices.

■ Standards

■ Specifications

Single-pole types

- **Main circuit 240V AC, SS101 to SS501**

AC control voltage

Type		SS101-5Z-A3 SS101-5Z-A4	SS201-5Z-A3 SS201-5Z-A4	SS301-5Z-A3 SS301-5Z-A4	SS401-5Z-A3 SS401-5Z-A4	SS501-5Z-A3 SS501-5Z-A4
Ordering code		SS101-5ZA3 SS101-5ZA4	SS201-5ZA3 SS201-5ZA4	SS301-5ZA3 SS301-5ZA4	SS401-5ZA3 SS401-5ZA4	SS501-5ZA3 SS501-5ZA4
Main circuit	Rated voltage	100 — 240V AC 50/60Hz				
	Rated thermal current (A)*	10	20	30	40	50
	Max. heater capacity (kW) Single phase 200V AC	2	4	6	8	10
	Number of elements	Single-pole, 1-element				
Control circuit	Isolation method	Photocoupler				
	Control voltage Vn	A3: 100 — 120V AC, A4: 200 —240V AC				
	Pick-up voltage Drop-out voltage	85% Vn or less 35% Vn and over				
	Operating time (at 100% Vn) Release time (at 100% Vn)	30ms or less 30ms or less				
Auxiliary circuit		–				

Note: * The values are the maximum ratings of type with cooling fin that apply at an ambient temperature not exceeding 40°C.

Downloaded from Arrow.com.

■ Specifications

Single-pole types

● Main circuit 240V AC, SS701 to SS2001
AC control voltage

Type		SS701-1Z-A3 SS701-1Z-A4	SS1001-1Z-A3 SS1001-1Z-A4	SS1501-1Z-A3 SS1501-1Z-A4	SS2001-1Z-A3 SS2001-1Z-A4
Ordering code		SS701-1ZA3 SS701-1ZA4	SS1A1-1ZA3 SS1A1-1ZA4	SS1F1-1ZA3 SS1F1-1ZA4	SS2A1-1ZA3 SS2A1-1ZA4
Main circuit	Rated voltage	100 — 240V AC 50/60Hz			
	Rated thermal current (A)*	70	100	150	200
	Max. heater capacity (kW) Single phase 200V AC	14	20	30	40
	Number of elements	Single-pole, 1-element			
Control circuit	Isolation method	Photocoupler			
	Control voltage Vn	A3: 100 — 120V AC, A4: 200 — 240V AC			
	Pick-up voltage Drop-out voltage	85% Vn or less 35% Vn and over			
	Operating time (at 100% Vn) Release time (at 100% Vn)	30ms or less 30ms or less			
Auxiliary circuit	Output Rated current and voltage	Thyristor 1NO A3: 50mA, 120V AC A4: 50mA, 240V AC			

Note: * The values are the maximum ratings of type with cooling fin that apply at an ambient temperature not exceeding 40°C.

● Main circuit 240V AC, SS101 to SS2001
DC control voltage

Type		SS101-3Z-D3	SS201-3Z-D3	SS301-3Z-D3	SS401-3Z-D3	SS501-3Z-D3
Ordering code		SS101-3ZD3	SS201-3ZD3	SS301-3ZD3	SS401-3ZD3	SS501-3ZD3
Main circuit	Rated voltage	100 — 240V AC 50/60Hz				
	Rated thermal current (A)*	10	20	30	40	50
	Max. heater capacity (kW) Single phase 200V AC	2	4	6	8	10
	Number of elements	Single-pole, 1-element				
Control circuit	Isolation method	Photocoupler				
	Control voltage Vn	5 — 24V DC				
	Pick-up voltage Drop-out voltage	3.5V or less 1V and over				
	Operating time (at 100% Vn) Release time (at 100% Vn)	15ms or less 15ms or less				
Auxiliary circuit		–				

Type		SS701-3Z-D3	SS1001-3Z-D3	SS1501-3Z-D3	SS2001-3Z-D3
Ordering code		SS701-3ZD3	SS1A1-3ZD3	SS1F1-3ZD3	SS2A1-3ZD3
Main circuit	Rated voltage	100 — 240V AC 50/60Hz			
	Rated thermal current (A)*	70	100	150	200
	Max. heater capacity (kW) Single phase 200V AC	14	20	30	40
	Number of elements	Single-pole, 1-element			
Control circuit	Isolation method	Photocoupler			
	Control voltage Vn	5 — 24V DC			
	Pick-up voltage Drop-out voltage	3.5V or less 1V and over			
	Operating time (at 100% Vn) Release time (at 100% Vn)	15ms or less 15ms or less			
Auxiliary circuit		–			

Note: * The values are the maximum ratings of type with cooling fin that apply at an ambient temperature not exceeding 40°C.

Downloaded from Arrow.com.

■ Specifications

Single-pole types

● Main circuit 480V AC, SS701H to SS2001H

AC control voltage

Type		SS701H-1Z-A3 SS701H-1Z-A4	SS1001H-1Z-A3 SS1001H-1Z-A4	SS1501H-1Z-A3 SS1501H-1Z-A4	SS2001H-1Z-A3 SS2001H-1Z-A4
Ordering code		SS701H-1ZA3 SS701H-1ZA4	SS1A1H-1ZA3 SS1A1H-1ZA4	SS1F1H-1ZA3 SS1F1H-1ZA4	SS2A1H-1ZA3 SS2A1H-1ZA4
Main circuit	Rated voltage	200 - 480V AC 50/60Hz			
	Rated thermal current (A)*	70	100	150	200
	Max. heater capacity (kW) Single phase 400V AC	28	40	60	80
	Number of elements	Single-pole, 1-element			
Control circuit	Isolation method	Photocoupler			
	Control voltage Vn	A3: 100 – 120V AC, A4: 200 – 240V AC			
	Pick-up voltage Drop-out voltage	85% Vn or less 35% Vn and over			
	Operating time (at 100% Vn) Release time (at 100% Vn)	30ms or less 30ms or less			
Auxiliary circuit	Output Rated current and voltage	Thyristor 1NO A3: 50mA, 120V AC A4: 50mA, 240V AC			

DC control voltage

Type		SS701H-3Z-D3	SS1001H-3Z-D3	SS1501H-3Z-D3	SS2001H-3Z-D3
Ordering code		SS701H-3ZD3	SS1A1H-3ZD3	SS1F1H-3ZD3	SS2A1H-3ZD3
Main circuit	Rated voltage	200 - 480V AC 50/60Hz			
	Rated thermal current (A)*	70	100	150	200
	Max. heater capacity (kW) Single phase 400V AC	28	40	60	80
	Number of elements	Single-pole, 1-element			
Control circuit	Isolation method	Photocoupler			
	Control voltage Vn	5 — 24V DC			
	Pick-up voltage Drop-out voltage	3.5V or less 1V and over			
	Operating time (at 100% Vn) Release time (at 100% Vn)	15ms or less 15ms or less			
Auxiliary circuit		–			

Note: * The values are the maximum ratings of type with cooling fin that apply at an ambient temperature not exceeding 40°C.

3-pole unit type

● Main circuit 240V AC, SS03 to SS120

Type *1			SS □■-1(Z)-A3, A4, D5		SS □■-1(Z)-A1, D2					
Ordering code *1			SS □■-1M(Z)A3, A4, D5		SS □■-1M(Z)A1, D2					
Main circuit	Rated voltage		100 - 240V AC 50/60Hz		100 - 240V AC 50/60Hz					
	Rated thermal current	(A)	3	8	20	30	40	50	80	120
	Max. heater capacity Max. motor capacity Motor full load current 3-phase 200V AC	(kW) (kW) *2 (A)	1.0 0.2 1.8	2.5 0.4 3.2	6.9 0.75 4.8	10.3 1.5 8	13.8 2.2 11.1	17.3 3.7 17.4	27.7 7.5 34	41.5 7.5 34
	Number of elements		3-pole, 2 or 3-element *3							
Control circuit	Isolation method		Photocoupler							
	Control voltage (Vn)		A3: 100–120V AC 50/60Hz A4: 200–240VAC 50/60Hz D5: 12–24V DC		A1: 100–120/200–240V AC 50/60Hz D2: 12/24V DC					
	Pick-up voltage Drop-out voltage		85% Vn or less 8V or less(D5) 30% Vn and over 1V and over(D5)		85% Vn or less 30% Vn and over					
	Operating time (at 100% Vn) Release time (at 100% Vn)		30ms or less 30ms or less							
Auxiliary circuit	Output	AC operated	Thyristor 1NO							Thyristor 2NO
		DC operated	Transistor 1NO							Transistor 2NO
	Rated current and voltage	AC operated	50mA, 240V AC		0.2A, 240V AC					
		DC operated	0.1A, 24V DC		0.2A, 24V DC					

Note: *1, *2, *3 see page 01/104.

Downloaded from Arrow.com.

■ Specifications

3-pole unit types

● Main circuit 240V AC, SS03 to SS120

Type *1			SS□■-3(Z)-D5, D6		SS□■-3(Z)-D3					
Ordering code *1			SS□■-3M(Z)D5, D6		SS□■-3M(Z)D3					
Main circuit	Rated voltage		100 - 240V AC 50/60Hz							
	Rated thermal current	(A)	3	8	20	30	40	50	80	120
	Max. heater capacity Max. motor capacity Motor full load current 3-phase 200V AC	(kW) (kW) *2 (A)	1.0 0.2 1.8	2.5 0.4 3.2	6.9 1.5 8	10.3 2.2 11.1	13.8 3.7 17.4	17.3 5.5 26	27.7 7.5 34	41.5 7.5 34
	Number of elements		3-pole, 2 or 3-element *3							
Control circuit	Isolation method		Photocoupler							
	Control voltage (Vn)		D5: 12–24V DC D6: 5V DC		D3: 5–24V DC					
	Pick-up voltage Drop-out voltage		D5: 8V or less D6: 4V or less D5, D6: 1V and over		D3: 3.5V or less D3: 1.5V and over					
	Operating time (at 100% Vn) Release time (at 100% Vn)		5ms or less (SS□-3Z: 15ms or less) 15ms or less							
Auxiliary circuit	AC operated type DC operated type		— —							

Notes: *1 Replace the □ mark by rated thermal current code (03 to 200), and the ■ mark by the number of elements (2 or 3). *See page 01/123,124.*
*2 Maximum ratings when SSC is used with cooling fin (SX1-□) at temperature of 40˚C or less.
Motor starting current: 6 times full-load current, Motor starting time: 0.25s or less.
*3 2-element types are supplied in 3-pole with current carrying parts omitted from center pole.

● Main circuit 480V AC, SS30H to SS120H

Type *1			SS□■H-1(Z)-A1, D2				SS□■H-3(Z)-D3			
Ordering code *1			SS□■H-1M(Z)A1, D2				SS□■H-3M(Z)D3			
Main circuit	Rated voltage		200 - 480V AC 50/60Hz				200 - 480V AC 50/60Hz			
	Rated thermal current	(A)	30	50	80	120	30	50	80	120
	Max. heater capacity Max. motor capacity Motor full load current 3-phase 400V AC	(kW) (kW) *2 (A)	20.7 7.5 17	34.6 11 24	55.4 22 48	83.0 22 48	20.7 7.5 17	34.6 11 24	55.4 22 48	83.0 22 48
	Number of elements		3-pole, 2 or 3-element *3				3-pole, 2 or 3-element *3			
Control circuit	Isolation method		Photocoupler				Photocoupler			
	Control voltage (Vn)		A1: 100–120/200–240V AC 50/60Hz D2: 12/24V DC				5–24V DC			
	Pick-up voltage Drop-out voltage		85% Vn or less 30% Vn and over				3.5V or less 1.5V and over			
	Operating time (at 100% Vn) Release time (at 100% Vn)		30ms or less 30ms or less				5ms or less (SS□H-3Z: 15ms or less) 15ms or less			
Auxiliary circuit	Output	AC operated DC operated	Thyristor 2NO Transistor 2NO				—			
	Rated current and voltage	AC operated DC operated	0.2A, 240V AC 0.2A, 24V DC				—			

Notes: *1 Replace the □ mark by rated thermal current code (03 to 200), and the ■ mark by the number of elements (2 or 3). *See page 01/123,124.*
*2 Maximum ratings when SSC is used with cooling fin (SX1-□) at temperature of 40˚C or less.
Motor starting current: 6 times full-load current, Motor starting time: 0.25s or less.
*3 2-element types are supplied in 3-pole with current carrying parts omitted from center pole.

Downloaded from Arrow.com.

■ Specifications

3-pole independent type

● Main circuit 240V AC, SS03-4 to SS120-4

Type *1		SS□■-4(Z)-A3		SS□■-4(Z)-A4		SS□■-4(Z)-D3		SS□■-4(Z)-D5		SS□■-4(Z)-D6	
Ordering code *1		SS□■-4M(Z)A3		SS□■-4M(Z)A4		SS□■-4M(Z)D3		SS□■-4M(Z)D5		SS□■-4M(Z)D6	
Main circuit	Rated voltage	100 - 240V AC 50/60Hz						100 - 240V AC 50/60Hz			
	Rated thermal current (A)	20	30	40	50	80	120	3	8	3	8
	Max. heater capacity (kW) Single phase 200V AC	4	6	8	10	16	24	0.6	1.6	0.6	1.6
	Number of elements	3-pole, 2 or 3-element *3									
Control circuit	Isolation method	Photocoupler									
	Control voltage (Vn)	100–120V AC		200–240V AC		5–24V DC		12–24V DC		5V DC	
	Pick-up voltage Drop-out voltage	85% Vn or less 30%Vn and over				3.5V or less 1.5V and over		8V or less 1V and over		4V or less 1V and over	
	Operating time (at 100% Vn) Release time (at 100% Vn)	30ms or less 30ms or less				5ms or less (D3: SS□■-4Z: 15ms or less) 15ms or less					
Auxiliary circuit		—									

● Main circuit 480V AC, SS30H-4 to SS120H-4

Type *1		SS□■H-4(Z)-A3		SS□■H-4(Z)-A4		SS□■H-4(Z)-D3
Ordering code *1		SS□■H-4M(Z)A3		SS□■H-4M(Z)A4		SS□■H-4M(Z)D3
Main circuit	Rated voltage	200 - 480V AC 50/60Hz				
	Rated thermal current (A)	30	50	80	120	
	Max. heater capacity (kW) Single phase 400V AC	12	20	32	48	
	Number of elements	3-pole, 2 or 3-element *3				
Control circuit	Isolation method	Photocoupler				
	Control voltage (Vn)	100–120V AC		200–240V AC		5–24V DC
	Pick-up voltage Drop-out voltage	85% Vn or less 30% Vn and over				3.5V or less 1.5V and over
	Operating time (at 100% Vn) Release time (at 100% Vn)	30ms or less 30ms or less				5ms or less (SS□■H-4Z: 15ms or less) 15ms or less
Auxiliary circuit		—				

Notes: *1 Replace the □ mark by rated thermal current code (03 to 200) and the ■ mark by the number of elements (2 or 3). *See page 01/123, 124.*
*2 Maximum ratings when SSC is used with cooling fin (SX1-□) at temperature of 40˚C or less.
*3 2-element types are supplied in 3-pole with current carrying parts omitted from center pole.

Downloaded from Arrow.com.

● 3-pole AC operated

Type Main circuit 240V AC: **Blank** 480V AC: **H**		Control circuit 3-pole unit type: **1**						3-pole independent type: **4**			
		Zero-cross function Provided: **Z**			Not provided: **Blank**			Provided: **Z**		Not provided: **Blank**	
3-pole 2-element	3-pole 3-element	Control voltage: 100-120V AC/200-220V AC: **A1**, 100-120V AC: **A3**, 200-240V AC: **A4**									
		A1	A3	A4	A1	A3	A4	A3	A4	A3	A4
		With cooling fin: F						With cooling fin: F			
SS032	SS033		●	●		●	●				
SS082	SS083		●	●		●	●				
SS202	SS203	●			●			●	●	●	●
SS302 SS302H	SS303 SS303H	● ●			● ●			● ●	● ●	● ●	● ●
SS402	SS403	●			●			●	●	●	●
SS502 SS502H	SS503 SS503H	● ●			● ●			● ●	● ●	● ●	● ●
SS802 SS802H	SS803 SS803H	● ●			● ●			● ●	● ●	● ●	● ●
SS1202 SS1202H	SS1203 SS1203H	● ●			● ●			● ●	● ●	● ●	● ●

Note: ● Available

● 3-pole DC operated

Type Main circuit 240V AC: **Blank** 480V AC: **H**		Control circuit 3-pole unit type: **1**				3-pole unit type: **3**						3-pole independent type: **4**					
		Zero-cross function **Z**		**Blank**		Provided: **Z** **Z**			Not provided: **Blank** **Blank**			**Z**			**Blank**		
3-pole 2-element	3-pole 3-element	Control voltage: 12/24V DC: **D2**, 5-24V DC: **D3**, 12-24V DC: **D5**, 5V DC: **D6**															
		D2	D5	D2	D5	D3	D5	D6	D3	D5	D6	D3	D5	D6	D3	D5	D6
		With cooling fin: F										With cooling fin: F					
SS032	SS033		●		●		●	●		●	●		●	●		●	●
SS082	SS083		●		●		●	●		●	●		●	●		●	●
SS202	SS203	●		●		●			●			●			●		
SS302 SS302H	SS303 SS303H	● ●		● ●		● ●			● ●			● ●			● ●		
SS402	SS403	●		●		●			●			●			●		
SS502 SS502H	SS503 SS503H	● ●		● ●		● ●			● ●			● ●			● ●		
SS802 SS802H	SS803 SS803H	● ●		● ●		● ●			● ●			● ●			● ●		
SS1202 SS1202H	SS1203 SS1203H	● ●		● ●		● ●			● ●			● ●			● ●		

Note: ● Available

Downloaded from Arrow.com.

■ Type number nomenclature

• Single-pole type

SS 70 1 □ – 1 Z – A3

Basic type

Rated thermal current
10: 10A 70: 70A
20: 20A 100: 100A
30: 30A 150: 150A
40: 40A 200: 200A
50: 50A

No. of main circuit elements
1: Single pole 1-element

Rated voltage of main circuit
Blank: 100–240V AC
H: 200–480V AC

Control voltage
A3: 100–120V AC
A4: 200–240V AC
D3: 5–24V DC

Zero-cross function
Z: Provided

Control circuit

	Isolation method	Voltage detector	Auxiliary contact	Applicable contactor	
1	Photocoupler	Provided	Provided	SS701 to 2001	240V AC
				SS701H to 2001H	480V AC
3	Photocoupler	Not provided	Not provided	SS101 to 2001	240V AC
				SS701H to 2001H	480V AC
5	Photocoupler	Not provided	Not provided	SS101 to 501	240V AC

• 3-pole type

SS 20 2 □ – 1 Z – A3 / F / T

Basic type

Rated thermal current
03: 3A *1 80: 80A
08: 8A *2 120: 120A
20: 20A
30: 30A
40: 40A
50: 50A

No. of main circuit elements
2: 3-pole 2-element
3: 3-pole 3-element

Rated voltage of main circuit
Blank: 100–240V AC
H: 200–480V AC

Terminal cover
Blank: Not provided
T: Provided (only for SS202 to SS502, SS203 to SS503 of main circuit voltage 200V)

Shipping form
F: Contactor and cooling fin set
F-A3: Contactor and cooling fin set *3
F-A4: Contactor and cooling fin set *4
F-D5: Contactor and cooling fin set *5
Blank: Contactor only
(Cooling fin sold separatry)

Control voltage
A1: 100–120/200–220V AC
A3: 100–120V AC
A4: 200–240V AC
D2: 12/24V DC
D3: 5–24V DC
D5: 12–24V DC
D6: 5V DC

Zero-cross function
Blank: Not provided
Z: Provided

Control circuit

	Control method		Isolation method	Voltage detector	Auxiliary contact
	3-pole unit	3-pole independent			
1	○		Photocoupler	Provided	Provided
3	○		Photocoupler	Not provided	Not provided
4		○	Photocoupler	Not provided	Not provided

Notes: *1 Type SS03□ can carry the rated thermal current even if no cooling fin is fitted.
*2 Type SS08□ is shipped with a cooling fin fitted to the main body even if /F is not suffixed to the type number.
*3 Suffix code applicable only to type SS80□ and type SS120□. Fan rated operating voltage: 100–120V AC, 50/60Hz.
*4 Suffix code applicable only to type SS80□ and type SS120□. Fan rated operating voltage: 200–240V AC, 50/60Hz.
*5 Suffix code applicable only to type SS80□ and type SS120□. Fan rated operating voltage: 24V DC.

Downloaded from Arrow.com.

■ Ordering code system

S	S	8 0	3	H	—	1	Z	A	1	F	A	3
①	②	③④	⑤	⑥		⑦	⑧	⑨	⑩	⑪	⑫	⑬

① Product category

Description	Code
Contactor	S

② Series category

Description	Code
Solid-state contactor	S

③④ Framesize

Frame size	Code	
	③	④
03	0	3
08	0	8
10	1	0
20	2	0
30	3	0
40	4	0
50	5	0
70	7	0
80	8	0
100	1	A
120	1	C
150	1	F
200	2	A

⑤ No. of main circuit elements

No. of elements	Code
Single pole, 1-element	1
3-pole, 2-element	2
3-pole, 3-element	3

⑥ Rated voltage of main circuit

Rated voltage	Code
100 - 240V AC	Blank
200 - 480V AC	H

⑦ Control circuit

● 3-pole type

Control method	Insolation method	Voltage detector	Auxiliary contact	Code
3-pole unit	Photocoupler	Provided	Provided	1
3-pole unit	Photocoupler	Not provided	Not provided	3
3-pole independent	Photocoupler	Not provided	Not provided	4

● Single-pole type

Control method	Insolation method	Voltage detector	Auxiliary contact	Code
Single-pole	Photocoupler	Provided	Provided	1
	Photocoupler	Not provided	Not provided	3
	Photocoupler	Not provided	Not provided	5

⑧ Zero-cross function

Zero-cross function	Code	
	Single-pole	3-pole
Not provided	Blank	M
Provided	Z	Z

⑨⑩ Control voltage

Description	Code	
	⑨	⑩
100-120V/200-240V AC	A	1
100-120V AC	A	3
200-240V AC	A	4
12/24V DC	D	2
5-24 V DC	D	3
12-24V DC	D	5
5V DC	D	6

⑪ Shipping form

Description	Code	
	Single-pole	3-pole
Cooling fin set	Blank	F
Contactor only	Not provided	Blank

⑫⑬ Cooling fan voltage

Cooling fin control voltage	Code	
	⑫	⑬
100-120V AC	A	3
200-240V AC	A	4
12-24V DC	D	5

■ Versions

Single-pole type

● Main circuit 240V AC

Control voltage	Voltage detector	Auxiliary contact	Zero-cross function	Rated thermal current 10A	20A	30A	40A	50A
100 –120V AC	–	–	●	SS101-5Z-A3	SS201-5Z-A3	SS301-5Z-A3	SS401-5Z-A3	SS501-5Z-A3
200 –240V AC	–	–	●	SS101-5Z-A4	SS201-5Z-A4	SS301-5Z-A4	SS401-5Z-A4	SS501-5Z-A4
5 –24V DC	–	–	●	SS101-3Z-D3	SS201-3Z-D3	SS301-3Z-D3	SS401-3Z-D3	SS501-3Z-D3

Control voltage	Voltage detector	Auxiliary contact	Zero-cross function	Rated thermal current 70A	100A	150A	200A
100 –120V AC	●	●	●	SS701-1Z-A3	SS1A1-1Z-A3	SS1F1-1Z-A3	SS2A1-1Z-A3
200 –240V AC	●	●	●	SS701-1Z-A4	SS1A1-1Z-A4	SS1F1-1Z-A4	SS2A1-1Z-A4
5 –24V DC	–	–	●	SS701-3Z-D3	SS1A1-3Z-D3	SS1F1-3Z-D3	SS2A1-3Z-D3

● Main circuit 480V AC

Control voltage	Voltage detector	Auxiliary contact	Zero-cross function	Rated thermal current 70A	100A	150A	200A
100 –120V AC	●	●	●	SS701H-1Z-A3	SS1A1H-1Z-A3	SS1F1H-1Z-A3	SS2A1H-1Z-A3
200 –240V AC	●	●	●	SS701H-1Z-A4	SS1A1H-1Z-A4	SS1F1H-1Z-A4	SS2A1H-1Z-A4
5 –24V DC	–	–	●	SS701H-3Z-D3	SS1A1H-3Z-D3	SS1F1H-3Z-D3	SS2A1H-3Z-D3

Note: ● Provided – Not provided

Downloaded from Arrow.com.

■ Versions

3-pole type

● Main circuit 240V AC

Rated thermal current		3A	8A	20A	30A	40A	50A	80A	120A
AC control voltage *1	2-element	SS032-1M□	SS082-1M□	SS202-1M□F SS202-4M□F	SS302-1M□F SS302-4M□F	SS402-1M□F SS402-4M□F	SS502-1M□F SS502-4M□F	SS802-1M□F■ SS802-4M□F■	SS1C2-1M□F■ SS1C2-4M□F■
	(With zero-cross function)	SS032-1Z□	SS082-1Z□	SS202-1Z□F SS202-4Z□F	SS302-1Z□F SS302-4Z□F	SS402-1Z□F SS402-4Z□F	SS502-1Z□F SS502-4Z□F	SS802-1Z□F■ SS802-4Z□F■	SS1C2-1Z□F■ SS1C2-4Z□F■
	3-element	SS033-1M□	SS083-1M□	SS203-1M□F SS203-4M□F	SS303-1M□F SS303-4M□F	SS403-1M□F SS403-4M□F	SS503-1M□F SS503-4M□F	SS803-1M□F■ SS803-4M□F■	SS1C3-1M□F■ SS1C3-4M□F■
	(With zero-cross function)	SS033-1Z□	SS083-1Z□	SS203-1Z□F SS203-4Z□F	SS303-1Z□F SS303-4Z□F	SS403-1Z□F SS403-4Z□F	SS503-1Z□F SS503-4Z□F	SS803-1Z□F■ SS803-4Z□F■	SS1C3-1Z□F■ SS1C3-4Z□F■
DC control voltage *2	2-element	SS032-1M□ SS032-3M□ SS032-4M□	SS082-1M□ SS082-3M□ SS082-4M□	SS202-1M□F SS202-3M□F SS202-4M□F	SS302-1M□F SS302-3M□F SS302-4M□F	SS402-1M□F SS402-3M□F SS402-4M□F	SS502-1M□F SS502-3M□F SS502-4M□F	SS802-1M□F■ SS802-3M□F■ SS802-4M□F■	SS1C2-1M□F■ SS1C2-3M□F■ SS1C2-4M□F■
	(With zero-cross function)	SS032-1Z□ SS032-3Z□ SS032-4Z□	SS082-1Z□ SS082-3Z□ SS082-4Z□	SS202-1Z□F SS202-3Z□F SS202-4Z□F	SS302-1Z□F SS302-3Z□F SS302-4Z□F	SS402-1Z□F SS402-3Z□F SS402-4Z□F	SS502-1Z□F SS502-3Z□F SS502-4Z□F	SS802-1Z□F■ SS802-3Z□F■ SS802-4Z□F■	SS1C2-1Z□F■ SS1C2-3Z□F■ SS1C2-4Z□F■
	3-element	SS033-1M□ SS033-3M□ SS033-4M□	SS083-1M□ SS083-3M□ SS083-4M□	SS203-1M□F SS203-3M□F SS203-4M□F	SS303-1M□F SS303-3M□F SS303-4M□F	SS403-1M□F SS403-3M□F SS403-4M□F	SS503-1M□F SS503-3M□F SS503-4M□F	SS803-1M□F■ SS803-3M□F■ SS803-4M□F■	SS1C3-1M□F■ SS1C3-3M□F■ SS1C3-4M□F■
	(With zero-cross function)	SS033-1Z□ SS033-3Z□ SS033-4Z□	SS083-1Z□ SS083-3Z□ SS083-4Z□	SS203-1Z□F SS203-3Z□F SS203-4Z□F	SS303-1Z□F SS303-3Z□F SS303-4Z□F	SS403-1Z□F SS403-3Z□F SS403-4Z□F	SS503-1Z□F SS503-3Z□F SS503-4Z□F	SS803-1Z□F■ SS803-3Z□F■ SS803-4Z□F■	SS1C3-1Z□F■ SS1C3-3Z□F■ SS1C3-4Z□F■

Note: Enter the cooling fan voltage code in the ■ mark, *see page 01/124.*

● Main circuit 480V AC

Rated thermal current		30A	50A	80A	120A
AC control voltage *1	2-element	SS302H-1M□F SS302H-4M□F	SS502H-1M□F SS502H-4M□F	SS802H-1M□F■ SS802H-4M□F■	SS1C2H-1M□F■ SS1C2H-4M□F■
	(With zero-cross function)	SS302H-1Z□F SS302H-4Z□F	SS502H-1Z□F SS502H-4Z□F	SS802H-1Z□F■ SS802H-4Z□F■	SS1C2H-1Z□F■ SS1C2H-4Z□F■
	3-element	SS303H-1M□F SS303H-4M□F	SS503H-1M□F SS503H-4M□F	SS803H-1M□F■ SS803H-4M□F■	SS1C3H-1M□F■ SS1C3H-4M□F■
	(With zero-cross function)	SS303H-1Z□F SS303H-4Z□F	SS503H-1Z□F SS503H-4Z□F	SS803H-1Z□F■ SS803H-4Z□F■	SS1C3H-1Z□F■ SS1C3H-4Z□F■
DC control voltage *2	2-element	SS302H-1M□F SS302H-3M□F SS302H-4M□F	SS502H-1M□F SS502H-3M□F SS502H-4M□F	SS802H-1M□F■ SS802H-3M□F■ SS802H-4M□F■	SS1C2H-1M□F■ SS1C2H-3M□F■ SS1C2H-4M□F■
	(With zero-cross function)	SS302H-1Z□F SS302H-3Z□F SS302H-4Z□F	SS502H-1Z□F SS502H-3Z□F SS502H-4Z□F	SS802H-1Z□F■ SS802H-3Z□F■ SS802H-4Z□F■	SS1C2H-1Z□F■ SS1C2H-3Z□F■ SS1C2H-4Z□F■
	3-element	SS303H-1M□F SS303H-3M□F SS303H-4M□F	SS503H-1M□F SS503H-3M□F SS503H-4M□F	SS803H-1M□F■ SS803H-3M□F■ SS803H-4M□F■	SS1C3H-1M□F■ SS1C3H-3M□F■ SS1C3H-4M□F■
	(With zero-cross function)	SS303H-1Z□F SS303H-3Z□F SS303H-4Z□F	SS503H-1Z□F SS503H-3Z□F SS503H-4Z□F	SS803H-1Z□F■ SS803H-3Z□F■ SS803H-4Z□F■	SS1C3H-1Z□F■ SS1C3H-3Z□F■ SS1C3H-4Z□F■

Note: Enter the cooling fan voltage code in the ■ mark, *see page 01/124.*

Notes:
Control voltage (*Refer to page 01/124, 125.*)

*1 Replace the □ mark in the order number by the control voltage codes shown below.

A1	100–120/200–240V AC
A3	100–120V AC
A4	200–240V AC

*2 Replace the □ mark in the order number by the control voltage codes shown below.

D2	12/24V DC
D3	5–24V DC
D5	12–24V DC
D6	5V DC

Downloaded from Arrow.com.

■ Dimensions, mm

Single-pole type

● **SS101**

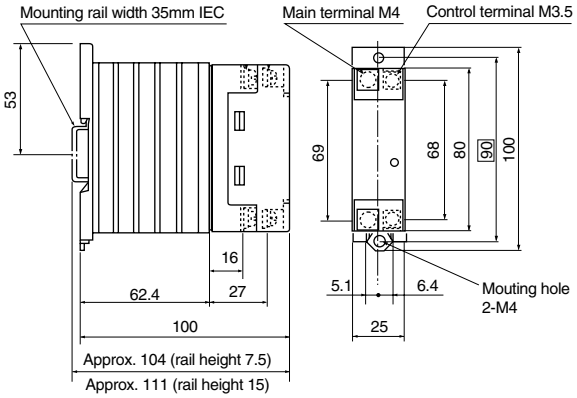

● **SS201**

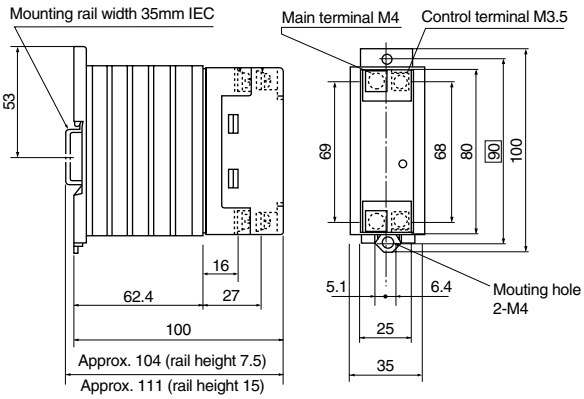

● **SS301, 401**

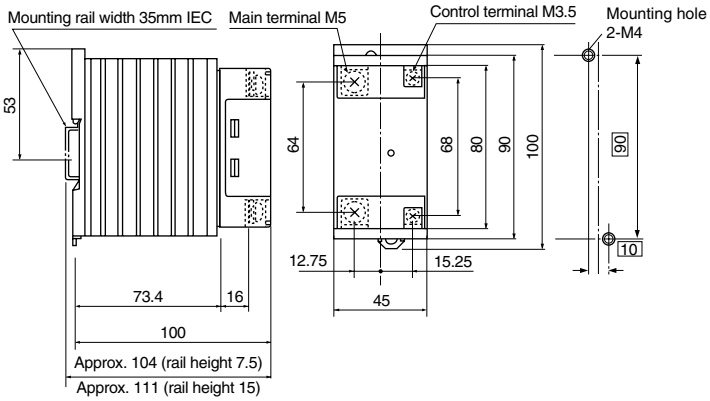

● **SS501**

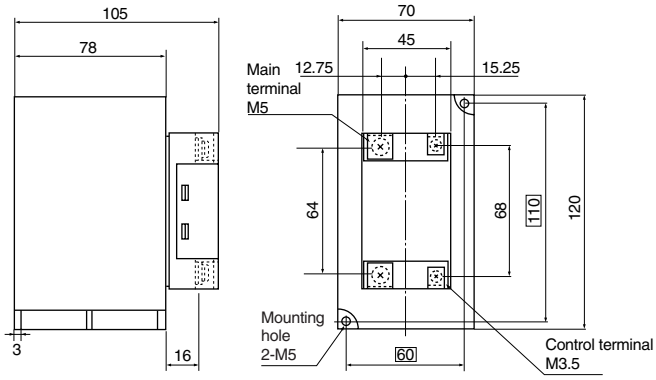

Mass:
SS101: 0.22kg SS401: 0.36kg
SS201: 0.24kg SS501: 0.66kg
SS301: 0.36kg

● **SS701**

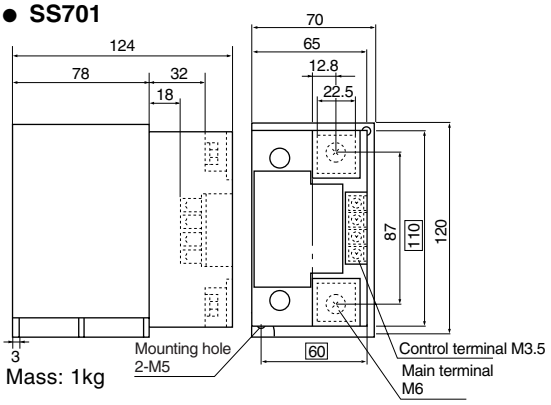

Mass: 1kg

Mounting hole dimensions

● **SS1001**

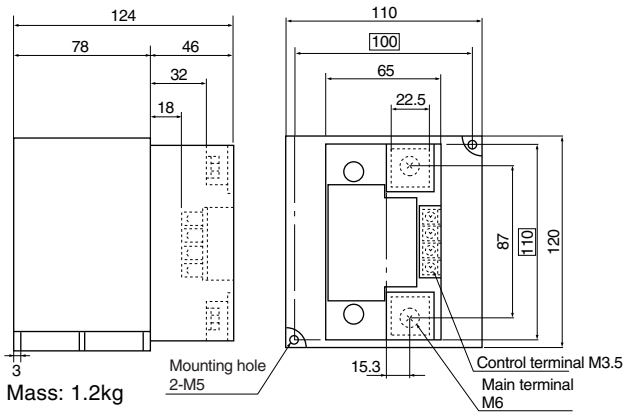

Mass: 1.2kg

■ Wiring diagram

● **SS101 to SS501**

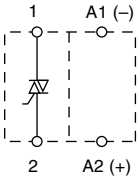

Input
A3: 100–120V AC
A4: 200–240V AC
D3: 5–24V DC

Downloaded from Arrow.com.

■ Dimensions, mm

Single-pole type

● SS1501

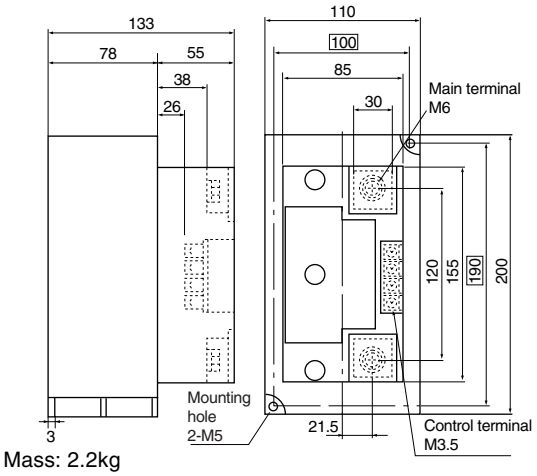

Mass: 2.2kg

● SS2001

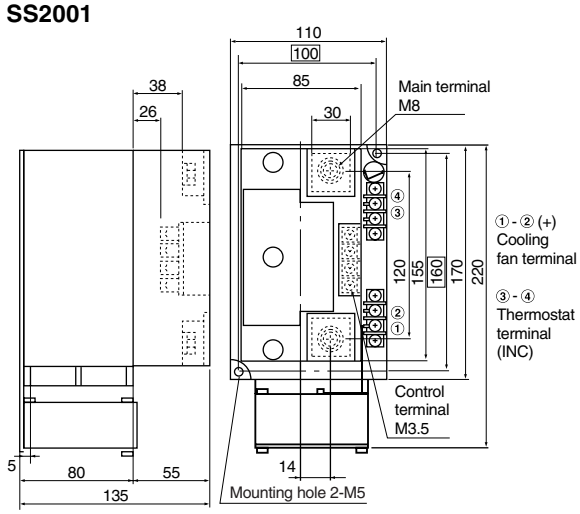

Mass: 2.9kg

Mounting hole dimensions

■ Wiring diagrams

● SS701 to SS1501
SS701H to SS1501H

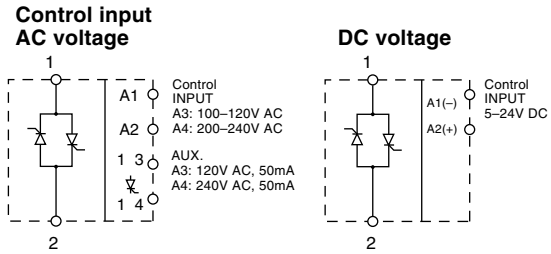

● SS2001, SS2001H

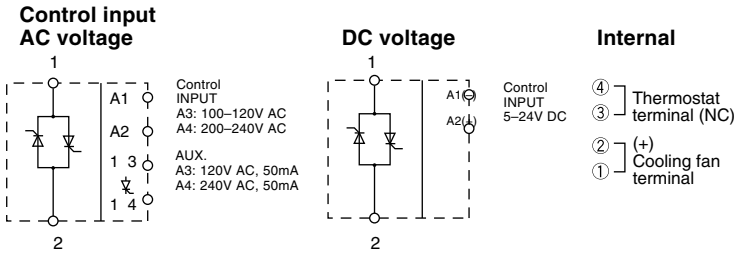

Single pole type solid-state contactor Application example

● Drive system

● Driven by relay contact

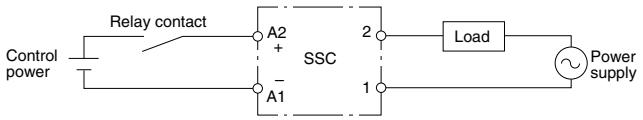

● Driven by NPN transistor

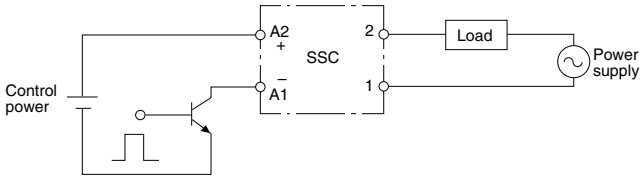

● Driven by PNP transistor

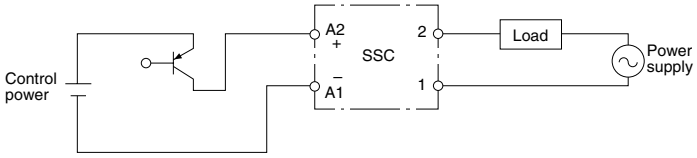

● Connection to load

● Heater control

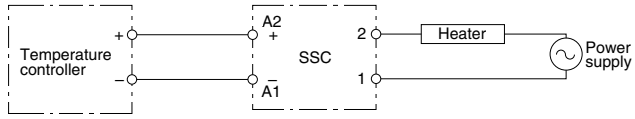

● Incandescent lamp

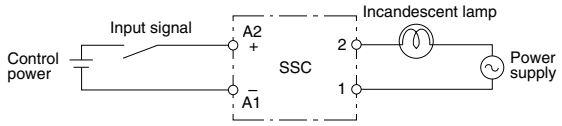

● 3-phase motor

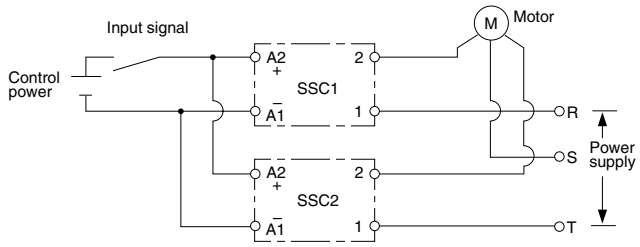

Downloaded from Arrow.com.

■ Dimensions, mm

3-pole unit type

● **SS03** (Rail mounting only)

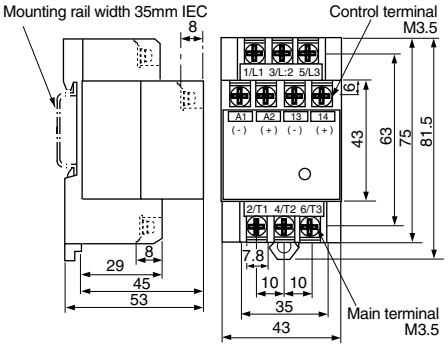

Mass: Approx. 0.18kg

● **SS08**

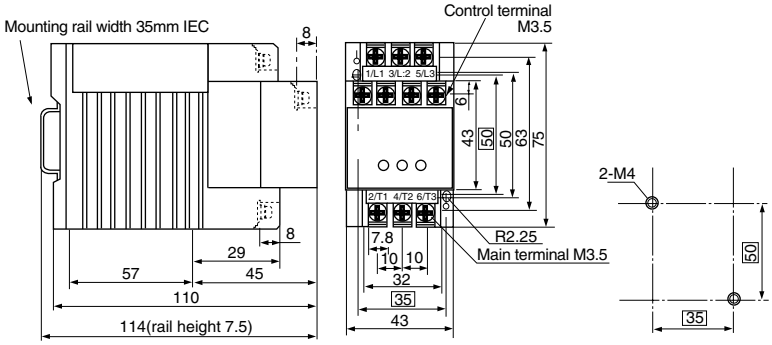

Mass: Approx. 0.3kg

● **SS202, 203, 30**

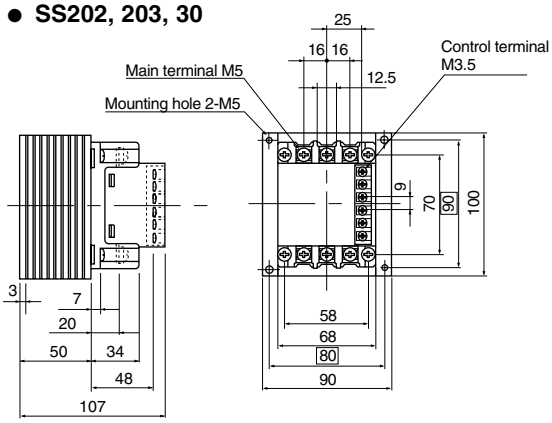

Mass: Approx. 0.77kg

● **SS303, 403**

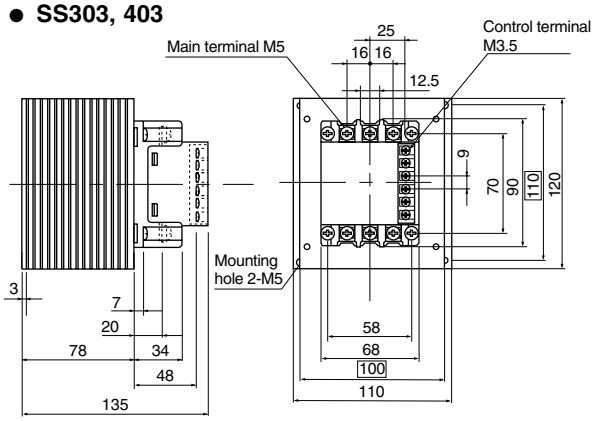

Mass: Approx. 1.1kg

● **SS402**

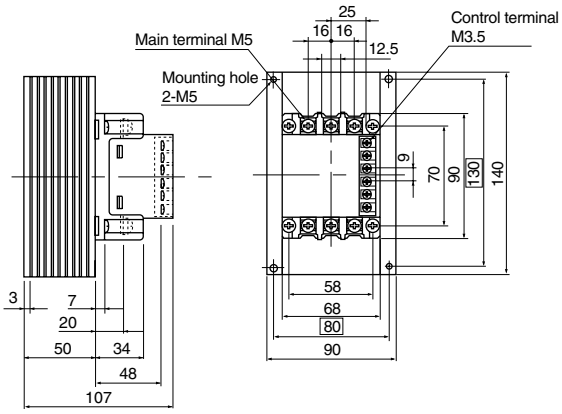

Mass: Approx. 0.99kg

● **SS502**

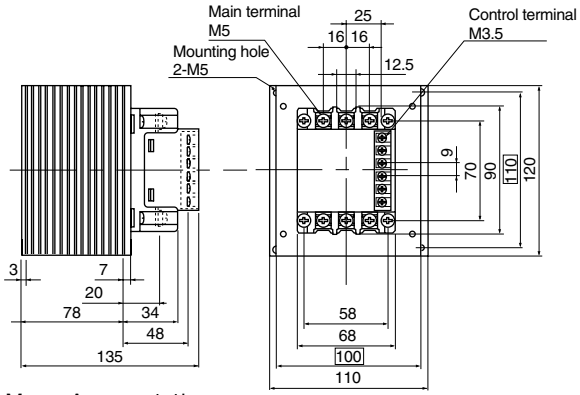

Mass: Approx. 1.1kg

▭ Mounting hole dimensions

Downloaded from Arrow.com.

■ Dimensions, mm

● SS503

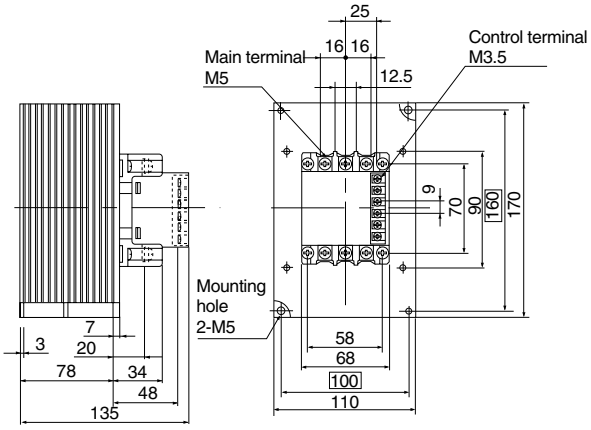

Mass: Approx. 1.6kg

● SS802, 803, 802H, 803H

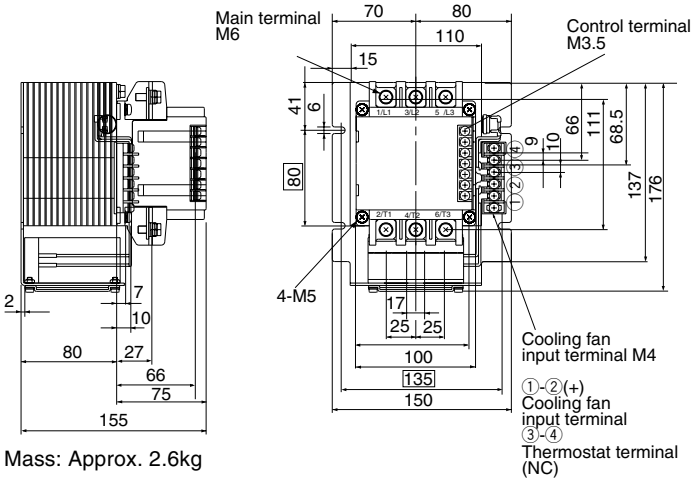

Mass: Approx. 2.6kg

● SS1202, 1203, 1202H, 1203H

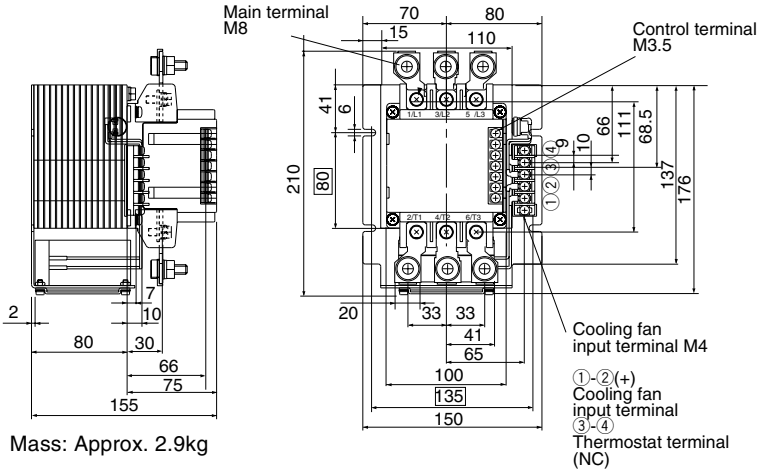

Mass: Approx. 2.9kg

● SS302H, 303H

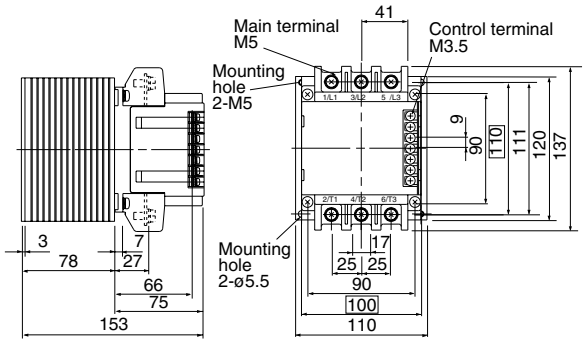

Mass: Approx. 1.8kg

● SS502H

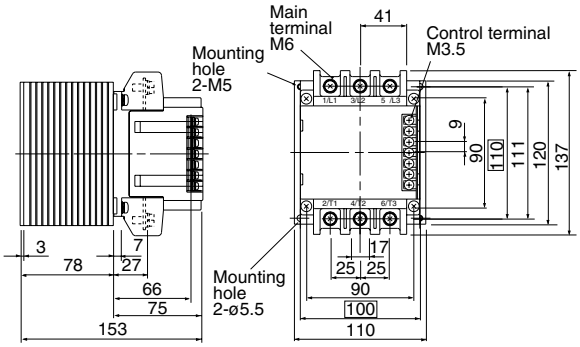

Mass: Approx. 1.8kg

● SS503H

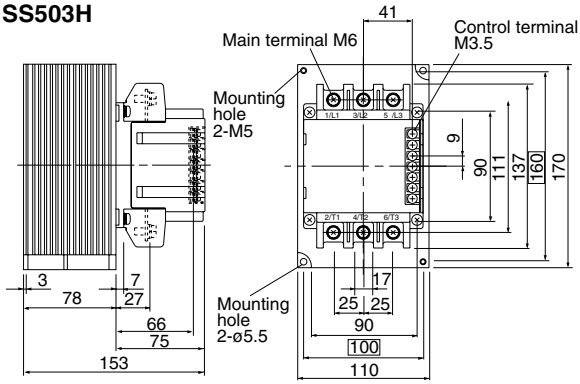

Mass: Approx. 2.2kg

☐ Mounting hole dimensions

Downloaded from Arrow.com.

■ Dimensions, mm/Cooling fins

● SX1-D10, SX1-D14

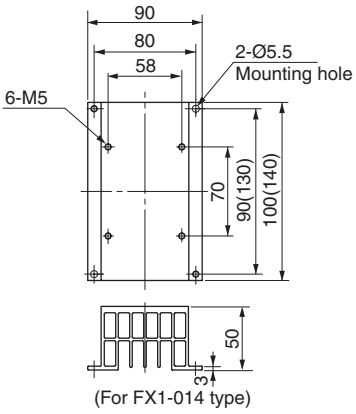

● SX1-E12

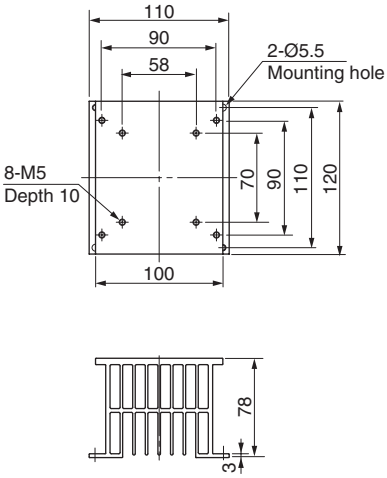

● SX1-E17

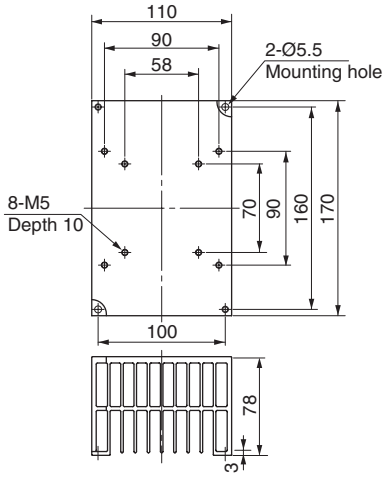

● SX1-C12

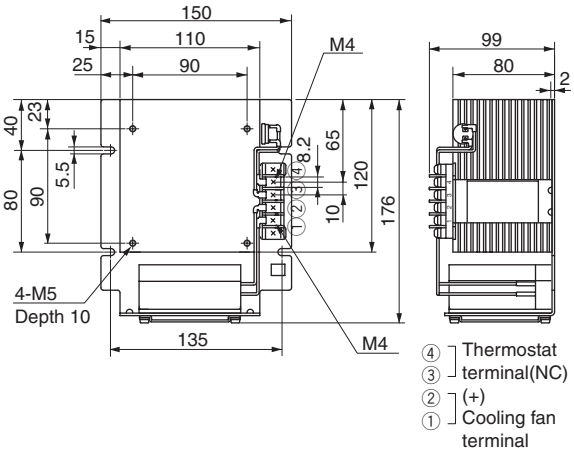

Type	Used with	Mass (kg)
SX1-D10	SS202, SS203, SS302	Approx. 0.36
SX1-D14	SS402	Approx. 0.53
SX1-E12	SS302H, SS303, SS303H SS403, SS502, SS502H	Approx. 0.82
SX1-E17	SS503, SS503H	Approx. 1.16
SX1-C12-A3 100–120V AC 50/60Hz **SX1-C12-A4** 200–240V AC 50/60Hz **SX1-C12-D5** 24V DC	SS802, SS802H, SS803 SS803H, SS1202, SS1202H SS1203, SS1203H	Approx. 2.2

■ Wiring diagrams

● SS03, SS08/2-element

A1, A2, A3, C3, COM: Control terminals
13, 14: Aux.terminals

SS032-1□-A□
SS082-1□-A□

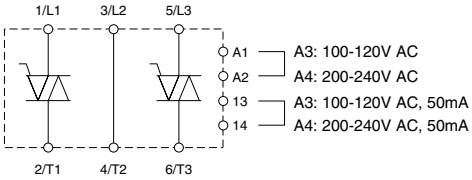

SS032-3□-D6
SS082-3□-D6

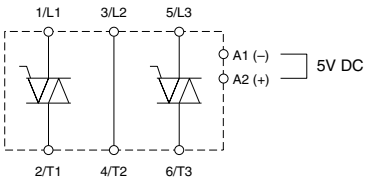

SS032-1□-D5
SS082-1□-D5

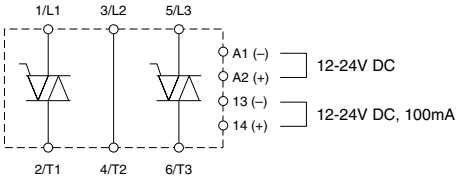

SS032-4□-D5
SS082-4□-D5

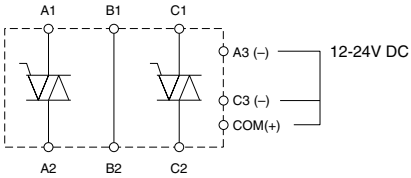

SS032-3□-D5
SS082-3□-D5

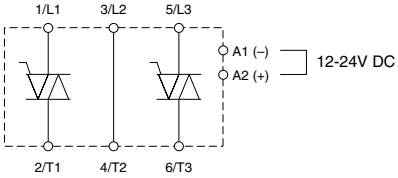

SS032-4□-D6
SS082-4□-D6

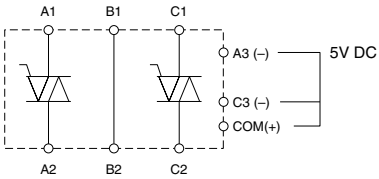

Downloaded from Arrow.com.

■ Wiring diagrams

A1, A2, A3, B3, B4, C3, C4: Control terminals
13, 14, 23, 24: Aux.terminals

● SS03, SS08/3-element

SS033-1□-A□
SS083-1□-A□

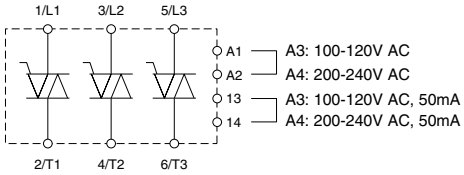

SS033-3□-D6
SS083-3□-D6

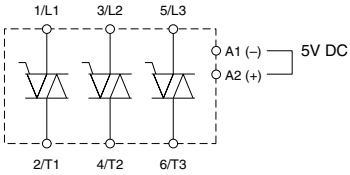

SS033-1□-D5
SS083-1□-D5

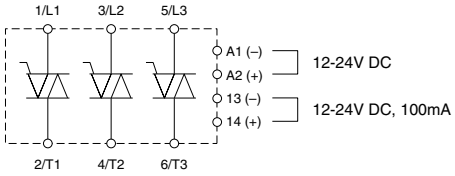

SS033-4□-D5
SS083-4□-D5

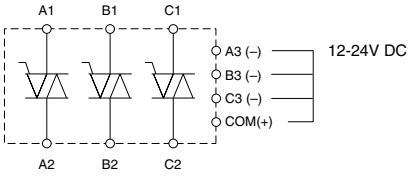

SS033-3□-D5
SS083-3□-D5

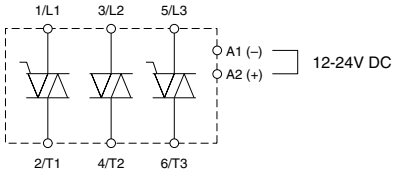

SS032-4□-D6
SS082-4□-D6

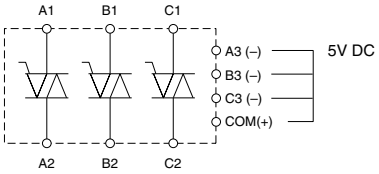

● SS20, SS30, SS40, SS50, SS80, SS120

2-element

SS□-1
AC control

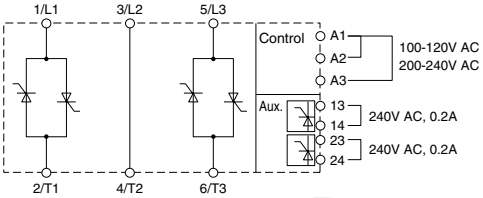

SS80, 120, □H: 2NO, output

SS□-1
DC control

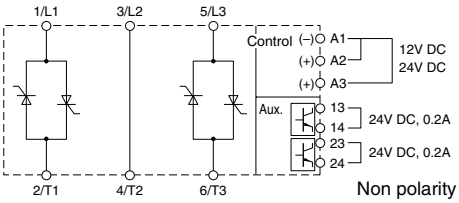

Non polarity

SS□-3

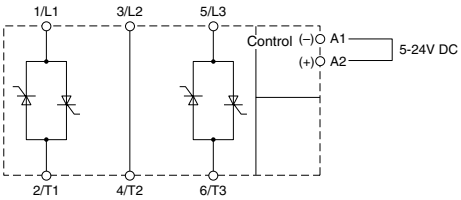

SS□-4

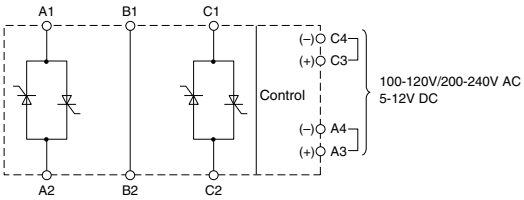

3-element

SS□-1
AC control

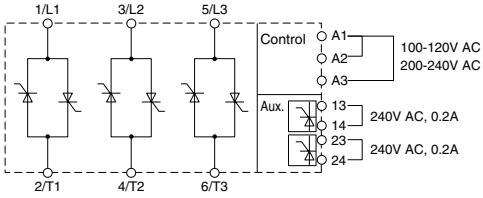

SS80, 120, □H: 2NO, output

SS□-1
DC control

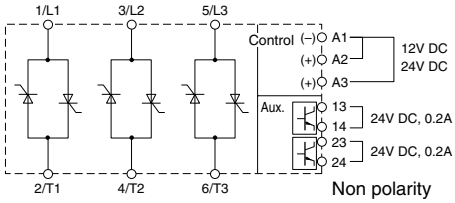

Non polarity

SS□-3

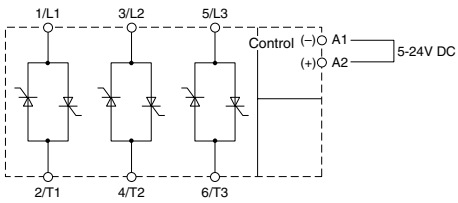

SS□-4

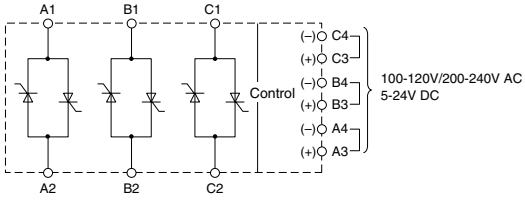

■ Precautions for use

Be sure to read an Instruction Manual enclosed with the solid state relays before using in order to ensure proper operation.

Downloaded from Arrow.com.

KK05-049

SW-N1

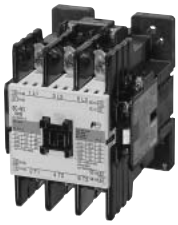

KK04-090

SC-N3

AF89-728

SB-2N/SEUL

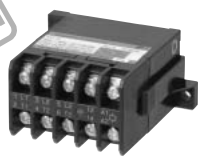

KKD06-052

FC-0UL

■ Ordering information

Specify the following:

1. Ordering code
2. Overload relay setting range code
3. Operating coil voltage code

UL [File No. E42419, E44592], **CSA** [File No. LR20479]
Non reversing contactors (Open type)

Frame size	Max. motor capacity (HP) 200V 240V	220V 480V	440V 480V	550V 600V	Rated continuous current	Aux. contact NO	NC	AC operated Type	Ordering code	UL	DC operated Type	Ordering code	UL
03	2	2	5	5	11A	1	– *1	**SC-03**	SC11AA-■10	●	**SC-03/G**	SC11AG-■10	●
0	3	3	5	5	13A	1	– *1	**SC-0**	SC13AA-■10	●	**SC-0/G**	SC13AG-■10	●
05	3	3	5	5	13A	1	1 *2	**SC-05**	SC14AA-■11	●	**SC-05/G**	SC14AG-■11	●
4-0	5	5	7.5	7.5	20A	1	– *1	**SC-4-0**	SC18AA-■10	●	**SC-4-0/G**	SC18AG-■10	●
4-1	5	5	10	10	20A	1	– *1	**SC-4-1**	SC19AA-■10	●	**SC-4-1/G**	SC19AG-■10	●
5-1	5	5	10	10	20A	1	1 *3	**SC-5-1**	SC20AA-■11	●	**SC-5-1/G**	SC20AG-■11	●
N1	7.5	10	25	25	50A	2	2 *4	**SC-N1**	SC25BAA-■22	●	**SC-N1/G**	SC25BAG-■22	●
N2	10	15	30	30	60A	2	2 *4	**SC-N2**	SC35BAA-■22	●	**SC-N2/G**	SC35BAG-■22	●
N2S	15	20	40	40	80A	2	2 *4	**SC-N2S**	SC50BAA-■22	●	**SC-N2S/G**	SC50BAG-■22	●
N3	20	25	50	50	100A	2	2 *4	**SC-N3**	SC65BAA-■22	●	**SC-N3/G**	SC65BAG-■22	●
N4	25	30	60	60	135A	2	2 *4	**SC-N4**	SC80BAA-■22	●	**SC-N4/G**	SC80BAG-■22	●
N5	30	30	60	75	150A	2	2 *4	**SC-N5A**	SC93CAA-■22	●	**SC-N5/G**	SC93BAG-■22	●
N6	40	40	75	100	150A	2	2 *4	**SC-N6**	SC1CBAA-■22	●	**SC-N6**	SC1CBAA-■22	●
N7	50	50	100	125	200A	2	2 *4	**SC-N7**	SC1FBAA-■22	●	**SC-N7**	SC1FBAA-■22	●
N8	60	60	150	150	260A	2	2 *4	**SC-N8**	SC1JBAA-■22	●	**SC-N8**	SC1JBAA-■22	●
N10	75	75	150	200	260A	2	2 *4	**SC-N10**	SC2CBAA-■22	●	**SC-N10**	SC2CBAA-■22	●
N11	100	100	200	250	350A	2	2 *4	**SC-N11**	SC3ABAA-■22	●	**SC-N11**	SC3ABAA-■22	●
N12	125	150	300	350	450A	2	2 *4	**SC-N12**	SC4ABAA-■22	●	**SC-N12**	SC4ABAA-■22	●
N14	200	200	500	600	660A	2	2 *4	**SC-N14**	SC6ABAA-■22	●	**SC-N14**	SC6ABAA-■22	●
N16	250	300	600	700	800A	2	2 *4	**SC-N16**	SC8ABAA-■22	●	**SC-N16**	SC8ABAA-■22	●
N1	7.5	10	25	25	50A	2	2 *4	**SC-N1/SE**	SC25BAS-■22	●	**SC-N1/SE**	SC25BAS-■22	●
N2	10	15	30	30	60A	2	2 *4	**SC-N2/SE**	SC35BAS-■22	●	**SC-N2/SE**	SC35BAS-■22	●
N2S	15	20	40	40	80A	2	2 *4	**SC-N2S/SE**	SC50BAS-■22	●	**SC-N2S/SE**	SC50BAS-■22	●
N3	20	25	50	50	100A	2	2 *4	**SC-N3/SE**	SC65BAS-■22	●	**SC-N3/SE**	SC65BAS-■22	●
N4	25	30	60	60	135A	2	2 *4	**SC-N4/SE**	SC80BAS-■22	●	**SC-N4/SE**	SC80BAS-■22	●

Notes: ● Available
■ Coil voltage code

*1 Auxiliary contact 1NC is available on request.
*2 Auxiliary contact 2NO or 2NC is available on request.
*3 Auxiliary contact 2NO or 2NC or 2NO+2NC is available on request.
*4 Auxiliary contact 4NO+4NC is available on request for frame sizes N1 and above.

Downloaded from Arrow.com.

Non reversing starters (Open type)

Frame size	Max. motor capacity (HP) 200V	220V 240V	440V 480V	550V 600V	Aux. contact NO	NC	AC operated Type	Ordering code		DC operated Type	Ordering code	
03	2	2	5	5	1	– *1	**SW-03/3H**	SC11AAN-■10T□D	●	**SW-03/G3H**	SC11AGN-■10T□D	●
0	3	3	5	5	1	– *1	**SW-0/3H**	SC13AAN-■10T□D	●	**SW-0/G3H**	SC13AGN-■10T□D	●
05	3	3	5	5	1	1 *2	**SW-05/3H**	SC14AAN-■11T□D	●	**SW-05/G3H**	SC14AGN-■11T□D	●
4-0	5	5	7.5	7.5	1	– *1	**SW-4-0/3H**	SC18AAN-■10T□D	●	**SW-4-0/G3H**	SC18AGN-■10T□D	●
4-1	5	5	10	10	1	– *1	**SW-4-1/3H**	SC19AAN-■10T□D	●	**SW-4-1/G3H**	SC19AGN-■10T□D	●
5-1	5	5	10	10	1	1 *3	**SW-5-1/3H**	SC20AAN-■11T□D	●	**SW-5-1/G3H**	SC20AGN-■10T□D	●
N1	7.5	10	25	25	2	2 *4	**SW-N1/3H**	SC25BAAN-■22T□D	●	**SW-N1/G3H**	SC25BAGN-■10T□D	●
N2	10	15	30	30	2	2 *4	**SW-N2/3H**	SC35BAAN-■22T□D	●	**SW-N2/G3H**	SC35BAGN-■10T□D	●
N2S	15	20	40	40	2	2 *4	**SW-N2S/3H**	SC50BAAN-■22T□D	●	**SW-N2S/G3H**	SC50BAGN-■10T□D	●
N3	20	25	50	50	2	2 *4	**SW-N3/3H**	SC65BAAN-■22T□D	●	**SW-N3/G3H**	SC65BAGN-■10T□D	●
N4	25	30	60	60	2	2 *4	**SW-N4/3H**	SC80BAAN-■22T□	●	**SW-N4/G3H**	SC80BAGN-■22T□D	●
N5	30	30	60	75	2	2 *4	**SW-N5A/3H**	SC93CAAN-■22T□	●	**SW-N5/G3H**	SC93BAGN-■22T□D	●
N6	40	40	75	100	2	2 *4	**SW-N6/3H**	SC1CBAAN-■22T□	●	**SW-N6/3H**	SC1CBAAN-■22T□	●
N7	50	50	100	125	2	2 *4	**SW-N7/3H**	SC1FBAAN-■22T□	●	**SW-N7/3H**	SC1FBAAN-■22T□	●
N8	60	60	150	150	2	2 *4	**SW-N8/3H**	SC1JBAAN-■22T□	●	**SW-N8/3H**	SC1JBAAN-■22T□	●
N10	75	75	150	200	2	2 *4	**SW-N10/3H**	SC2CBAAN-■22T□	●	**SW-N10/3H**	SC2CBAAN-■22T□	●
N11	100	100	200	250	2	2 *4	**SW-N11/3H**	SC3ABAAN-■22T□	●	**SW-N11/3H**	SC3ABAAN-■22T□	●
N12	125	150	300	350	2	2 *4	**SW-N12/3H**	SC4ABAAN-■22T□	●	**SW-N12/3H**	SC4ABAAN-■22T□	●
N14	200	200	500	600	2	2 *4	**SW-N14/3H**	SC6ABAAN-■22T□	●	**SW-N14/3H**	SC6ABAAN-■22T□	●
N1	7.5	10	25	25	2	2 *4	**SW-N1/SE3H**	SC25BASN-■22T□	●	**SW-N1/SE3H**	SC25BASN-■22T□	●
N2	10	15	30	30	2	2 *4	**SW-N2/SE3H**	SC35BASN-■22T□	●	**SW-N2/SE3H**	SC35BASN-■22T□	●
N2S	15	20	40	40	2	2 *4	**SW-N2S/SE3H**	SC50BASN-■22T□	●	**SW-N2S/SE3H**	SC50BASN-■22T□	●
N3	20	25	50	50	2	2 *4	**SW-N3/SE3H**	SC65BASN-■22T□	●	**SW-N3/SE3H**	SC65BASN-■22T□	●

Notes: ● Available
■ Coil voltage code
□ Thermal overload relay ampere setting range code

*1 Auxiliary contact 1NC is available on request.
*2 Auxiliary contact 2NO or 2NC is available on request.
*3 Auxiliary contact 2NO or 2NC or 2NO+2NC is available on request.
*4 Auxiliary contact 4NO+4NC is available on request for frame sizes N1 and above.

Non reversing starters with phase-loss protective device (Open type)

Frame size	Max. motor capacity (HP) 200V	220V 240V	440V 480V	550V 600V	Rated continuous current	Aux. contact NO	NC	AC operated Type	Ordering code		DC operated Type	Ordering code	
03	2	2	5	5	11A	1	– *1	**SW-03/2E**	SC11AAE-■10T□	●	**SW-03/G2E**	SC11AGE-■10T□	●
0	3	3	5	5	13A	1	– *1	**SW-0/2E**	SC13AAE-■10T□	●	**SW-0/G2E**	SC13AGE-■10T□	●
05	3	3	5	5	13A	1	1 *2	**SW-05/2E**	SC14AAE-■11T□	●	**SW-05/G2E**	SC14AGE-■11T□	●
4-0	5	5	7.5	7.5	20A	1	– *1	**SW-4-0/2E**	SC18AAE-■10T□	●	**SW-4-0/G2E**	SC18AGE-■10T□	●
4-1	5	5	10	10	20A	1	– *1	**SW-4-1/2E**	SC19AAE-■10T□	●	**SW-4-1/G2E**	SC19AGE-■10T□	●
5-1	5	5	10	10	20A	1	1 *3	**SW-5-1/2E**	SC20AAE-■11T□	●	**SW-5-1/G2E**	SC20AGE-■10T□	●
N1	7.5	10	25	25	50A	2	2 *4	**SW-N1/2E**	SC25BAAE-■22T□	●	**SW-N1/G2E**	SC25BAGE-■22T□	●
N2	10	15	30	30	60A	2	2 *4	**SW-N2/2E**	SC35BAAE-■22T□	●	**SW-N2/G2E**	SC35BAGE-■22T□	●
N2S	15	20	40	40	80A	2	2 *4	**SW-N2S/2E**	SC50BAAE-■22T□	●	**SW-N2S/G2E**	SC50BAGE-■22T□	●
N3	20	25	50	50	100A	2	2 *4	**SW-N3/2E**	SC65BAAE-■22T□	●	**SW-N3/G2E**	SC65BAGE-■22T□	●
N4	25	30	60	60	135A	2	2 *4	**SW-N4/2E**	SC80BAAE-■22T□	●	**SW-N4/G2E**	SC80BAGE-■22T□	●
N5	30	30	60	75	150A	2	2 *4	**SW-N5A/2E**	SC93CAAE-■22T□	●	**SW-N5/G2E**	SC93BAGE-■22T□	●
N6	40	40	75	100	150A	2	2 *4	**SW-N6/2E**	SC1CBAAE-■22T□	●	**SW-N6/2E**	SC1CBAAE-■22T□	●
N7	50	50	100	125	200A	2	2 *4	**SW-N7/2E**	SC1FBAAE-■22T□	●	**SW-N7/2E**	SC1FBAAE-■22T□	●
N8	60	60	150	150	260A	2	2 *4	**SW-N8/2E**	SC1JBAAE-■22T□	●	**SW-N8/2E**	SC1JBAAE-■22T□	●
N10	75	75	150	200	260A	2	2 *4	**SW-N10/2E**	SC2CBAAE-■22T□	●	**SW-N10/2E**	SC2CBAAE-■22T□	●
N11	100	100	200	250	350A	2	2 *4	**SW-N11/2E**	SC3ABAAE-■22T□	●	**SW-N11/2E**	SC3ABAAE-■22T□	●
N12	125	150	300	350	450A	2	2 *4	**SW-N12/2E**	SC4ABAAE-■22T□	●	**SW-N12/2E**	SC4ABAAE-■22T□	●
N14	200	200	500	600	660A	2	2 *4	**SW-N14/2E**	SC6ABAAE-■22T□	●	**SW-N14/2E**	SC6ABAAE-■22T□	●
N1	7.5	10	25	25	50A	2	2 *4	**SW-N1/SE2E**	SC25BASE-■22T□	●	**SW-N1/SE2E**	SC25BASE-■22T□	●
N2	10	15	30	30	60A	2	2 *4	**SW-N2/SE2E**	SC35BASE-■22T□	●	**SW-N2/SE2E**	SC35BASE-■22T□	●
N2S	15	20	40	40	80A	2	2 *4	**SW-N2S/SE2E**	SC50BASE-■22T□	●	**SW-N2S/SE2E**	SC50BASE-■22T□	●
N3	20	25	50	50	100A	2	2 *4	**SW-N3/SE2E**	SC65BASE-■22T□	●	**SW-N3/SE2E**	SC65BASE-■22T□	●
N4	25	30	60	60	135A	2	2 *4	**SW-N4/SE2E**	SC80BASE-■22T□	●	**SW-N4/SE2E**	SC80BASE-■22T□	●

Notes: ● Available
■ Coil voltage code
□ Thermal overload relay ampere setting range code

*1 Auxiliary contact 1NC is available on request.
*2 Auxiliary contact 2NO or 2NC is available on request.
*3 Auxiliary contact 2NO or 2NC or 2NO+2NC is available on request.
*4 Auxiliary contact 4NO+4NC is available on request for frame sizes N1 and above.

Downloaded from Arrow.com.

Reversing contactors and starters (Open type)

Auxiliary contact NO	Auxiliary contact NC	Contactor AC operated Type	Ordering code	Starter Standard Type	Ordering code	With phase-loss protective device Type	Ordering code	Approved
–	2 *1	**SC-03RM**	SC11RA-■01	**SW-03RM/3H**	SC11RAN-■01T □D	**SW-03RM/2E**	SC11RAE-■01T□	●
–	2 *1	**SC-0RM**	SC13RA-■01	**SW-0RM/3H**	SC13RAN-■01T □D	**SW-0RM/2E**	SC13RAE-■01T□	●
2	2 *2	**SC-05RM**	SC14RA-■11	**SW-05RM/3H**	SC14RAN-■11T □D	**SW-05RM/2E**	SC14RAE-■11T□	●
–	2 *1	**SC-4-0RM**	SC18RA-■01	**SW-4-0RM/3H**	SC18RAN-■01T □D	**SW-4-0RM/2E**	SC18RAE-■01T□	●
–	2 *1	**SC-4-1RM**	SC19RA-■01	**SW-4-1RM/3H**	SC19RAN-■01T □D	**SW-4-1RM/2E**	SC19RAE-■01T□	●
2	2 *3	**SC-5-1RM**	SC20RA-■11	**SW-5-1RM/3H**	SC20RAN-■11T □D	**SW-5-1RM/2E**	SC20RAE-■11T□	●
4	4 *4	**SC-N1RM**	SC25BRA-■22	**SW-N1RM/3H**	SC25BRAN-■22T □D	**SW-N1RM/2E**	SC25BRAE-■22T□	●
4	4 *4	**SC-N2RM**	SC35BRA-■22	**SW-N2RM/3H**	SC35BRAN-■22T □D	**SW-N2RM/2E**	SC35BRAE-■22T□	●
4	4 *4	**SC-N2SRM**	SC50BRA-■22	**SW-N2SRM/3H**	SC50BRAN-■22T □D	**SW-N2SRM/2E**	SC50BRAE-■22T□	●
4	4 *4	**SC-N3RM**	SC65BRA-■22	**SW-N3RM/3H**	SC65BRAN-■22T □D	**SW-N3RM/2E**	SC65BRAE-■22T□	●
4	4 *4	**SC-N4RM**	SC80BRA-■22	**SW-N4RM/3H**	SC80BRAN-■22T □	**SW-N4RM/2E**	SC80BRAE-■22T□	●
4	4 *4	**SC-N5ARM**	SC93CRA-■22	**SW-N5ARM/3H**	SC93CRAN-■22T □	**SW-N5ARM/2E**	SC93CRAE-■22T□	●
4	4 *4	**SC-N6RM**	SC1CBRA-■22	**SW-N6RM/3H**	SC1CBRAN-■22T □	**SW-N6RM/2E**	SC1CBRAE-■22T□	●
4	4 *4	**SC-N7RM**	SC1FBRA-■22	**SW-N7RM/3H**	SC1FBRAN-■22T □	**SW-N7RM/2E**	SC1FBRAE-■22T□	●
4	4 *4	**SC-N8RM**	SC1JBRA-■22	**SW-N8RM/3H**	SC1JBRAN-■22T □	**SW-N8RM/2E**	SC1JBRAE-■22T□	●
4	4 *4	**SC-N10RM**	SC2CBRA-■22	**SW-N10RM/3H**	SC2CBRAN-■22T □	**SW-N10RM/2E**	SC2CBRAE-■22T□	●
4	4 *4	**SC-N11RM**	SC3ABRA-■22	**SW-N11RM/3H**	SC3ABRAN-■22T □	**SW-N11RM/2E**	SC3ABRAE-■22T□	●
4	4 *4	**SC-N12RM**	SC4ABRA-■22	**SW-N12RM/3H**	SC4ABRAN-■22T □	**SW-N12RM/2E**	SC4ABRAE-■22T□	●
4	4 *4	**SC-N14RM**	SC6ABRA-■22	**SW-N14RM/3H**	SC6ABRAN-■22T □	**SW-N14RM/2E**	SC6ABRAE-■22T□	●

Notes: ● Available
■ Coil voltage code
□ Thermal overload relay ampere setting range code

Ratings are same as non-reversing types.
*1 Auxiliary contact 2NO is available on request.
*2 Auxiliary contact 4NC is available on request.
*3 Auxiliary contact 4NC, 4NO+4NC is available on request.
*4 Auxiliary contact 6NO+6NC is available on request.

● Coil characteristics

Frame size 03 to N5A

Coil operating voltage				Code
24V	50Hz /	24–26V	60Hz	**E**
48V	50Hz /	48–52V	60Hz	**F**
100V	50Hz /	100–110V	60Hz	**1**
100–110V	50Hz /	110–120V	60Hz	**H**
110–120V	50Hz /	120–130V	60Hz	**K**
200V	50Hz /	200–220V	60Hz	**2**
200–220V	50Hz /	220–240V	60Hz	**M**
220–240V	50Hz /	240–260V	60Hz	**P**
346–380V	50Hz /	380–420V	60Hz	**S**
380–400V	50Hz /	400–440V	60Hz	**4**
415–440V	50Hz /	440–480V	60Hz	**T**
480–500V	50Hz /	500–550V	60Hz	**5**

Note: Other voltages are available in 24–600V AC range on request.

Frame size N5 to N16

Coil operating voltage AC		DC	Code
24–25V	50/60Hz	24V	**E**
48–50V	50/60Hz	48V	**F**
100–127V	50/60Hz	100–120V	**1**
200–250V	50/60Hz	200–240V	**2**
380–450V	50/60Hz	—	**4**

Notes: • Be careful of these voltages because they are different from the standard range.
• 24V and 48V is not available for N14 and 16 .

Frame size 03/G to N5/G

Coil operating voltage DC	Code
12V	**B**
24V	**E**
48V	**F**
60V	**G**
100V	**1**
110V	**H**
120V	**K**
200V	**2**
210V	**Y**
220V	**M**

Note: Other voltages are available in 12–250V DC range on request.

Downloaded from Arrow.com.

Thermal overload relays

Standard type Type	Ordering code	With phase-loss protective device Type	Ordering code	Setting range (A)	Reset	Combined motor starter Standard	With phase-loss protective device
TR-0N/3	TR13DW-□	**TK-0N**	TR13EW-□	0.1–0.15, 0.13–0.2, 0.15–0.24, 0.2–0.3 0.24–0.36, 0.3–0.45, 0.36–0.54, 0.48–0.72 0.64–0.96, 0.8–1.2, 0.95–1.45, 1.4–2.2 1.7–2.6, 2.2–3.4, 2.8–4.2, 4–6, 5–8, 6–9 7–11	Manual/auto	SW-03/3H SW-0/3H SW-05/3H	SW-03/2E SW-0/2E SW-05/2E
TR-5-1N/3	TR20DW-□	**TK-5-1N**	TR20EW-□	0.1–0.15, 0.13–0.2, 0.15–0.24, 0.2–0.3 0.24–0.36, 0.3–0.45, 0.36–0.54 0.48–0.72, 0.64–0.96, 0.8–1.2, 0.95–1.45 1.4–2.2, 1.7–2.6, 2.2–3.4, 2.8–4.2, 4–6 5–8, 6–9, 7–11, 9–13, 12–18	Manual/auto	SW-4-0/3H SW-4-1/3H SW-5-1/3H	SW-4-0/2E SW-4-1/2E SW-5-1/2E
TR-N2/3 **TR-N2H/3***	TR35BDW-□ TR35BDH-□	**TK-N2** **TK-N2H***	TR35BEW-□ TR35BEH-□	4–6, 5–8, 6–9, 7–11, 9–13, 12–18 18–26, 24–36, 32–42	Manual/auto	SW-N1/3H SW-N2/3H	SW-N1/2E SW-N2/2E
TR-N3/3 **TR-N3H/3***	TR65BDW-□ TR65BDH-□	**TK-N3** **TK-N3H***	TR65BEW-□ TR65BEH-□	7–11, 9–13, 12–18, 18–26, 24–36 28–40, 34–50, 45–65, 48–68	Manual/auto	SW-N2S/3H SW-N3/3H	SW-N2S/2E SW-N3/2E
TR-N5/3	TR93BDW-□	**TK-N5**	TR93BEW-□	7–11, 9–13, 12–18, 18–26, 24–36, 28–40 34–50, 45–65, 53–80, 65–95	Manual/auto	SW-N4/3H SW-N5A/3H	SW-N4/2E SW-N5A/2E
TR-N6/3 **TR-N6H/3***	TR1CBDW-□ TR1CBDH-□	**TK-N6** **TK-N6H***	TR1CBEW-□ TR1CBEH-□	45–65, 53–80, 65–95, 85–125	Manual/auto	SW-N6/3H	SW-N6/2E
TR-N7/3	TR1FBDW-□	**TK-N7**	TR1FBEW-□	45–65, 53–80, 65–95, 85–125, 110–160	Manual/auto	SW-N7/3H	SW-N7/2E
TR-N8/3	TR1JBDW-□	**TK-N8**	TR1JBEW-□	53–80, 65–95, 85–125, 110–160, 125–185	Manual/auto	SW-N8/3H	SW-N8/2E
TR-N10/3 **TR-N10H/3***	TR2CBDW-□ TR2CBDH-□	**TK-10N** **TK-10NH***	TR2CBEW-□ TR2CBEH-□	85–125, 110–160, 125–185, 160–240	Manual/auto	SW-N10/3H	SW-N10/2E
TR-N12/3 **TR-N12H/3***	TR4ABDW-□ TR4ABDH-□	**TK-12N** **TK-12NH***	TR4ABEW-□ TR4ABEH-□	110–160, 125–185, 160–240, 200–300, 240–360, 300–450	Manual/auto	SW-N11/3H SW-N12/3H	SW-N11/2E SW-N12/2E
TR-N14/3 **TR-N14H/3***	TR6ABDW-□ TR6ABDH-□	**TK-14N** **TK-14NH***	TR6ABEW-□ TR6ABEH-□	240–360, 300–450, 400–600	Manual/auto	SW-N14/3H	SW-N14/2E

Notes: □ Enter the thermal overload relay ampere setting range code
*Separate mounting type
•Auxiliary contact: 1NO+1NC
•UL recognized

• Max. setting ranges of these starters are as follows.

Starter	Max. setting range	Starter	Max. setting range
SW-03 **SW-N2S**	5–8A 45–65A	**SW-N1** **SW-N4**	24–36A 53–80A

● Auxiliary contact ratings

Contactors

Frame size	Continuous current (A)	AC	Make/Break (A)	DC	Make/Break (A)
SC-03 to N14	10	120V 240V 480V 600V	60/6 30/3 15/1.5 12/1.2	125V 250V	0.55/0.55 0.27/0.27

Thermal overload relays

Frame	Continuous current (A)	AC	Make/Break (A)	DC	Make/Break (A)
TR-0N/3 to 5-1N/3 TK-0N to 5-1N	2.5	120V 240V 480V 600V	15/1.5 7.5/0.75 3.75/0.375 3/0.3	125V 250V	0.22A/0.22 0.11A/0.11
TR-N2/3 to N14/3 TK-N2 to N14	5	120V 240V 480V 600V	30/3 15/1.5 7.5/0.75 6/0.6	125V 250V	0.22A/0.22 0.11A/0.11

● Thermal overload relays

Ampere setting ranges and codes

Ampere setting range (A)	Code	Ampere setting range (A)	Code	Ampere setting range (A)	Code
0.1 - 0.15	**A**	4 - 6	**S**	65 - 95	**M**
0.13 - 0.2	**B**	5 - 8	**T**	85 - 105	**I**
0.15 - 0.24	**C**	6 - 9	**U**	85 - 125	**N**
0.2 - 0.3	**D**	7 - 11	**V**	110 - 160	**P**
0.24 - 0.36	**E**	9 - 13	**W**	125 - 185	**R**
0.3 - 0.45	**F**	12 - 18	**X**	160 - 240	**S**
0.36 - 0.54	**G**	16 - 22	**Q**	200 - 300	**T**
0.48 - 0.72	**H**	18 - 26	**B**	240 - 360	**U**
0.64 - 0.96	**J**	24 - 36	**E**	300 - 450	**V**
0.8 - 1.2	**K**	28 - 40	**F**	400 - 600	**W**
0.95 - 1.45	**L**	32 - 42	**I**		
1.4 - 2.2	**M**	34 - 50	**G**		
1.7 - 2.6	**N**	45 - 65	**J**		
2.2 - 3.4	**P**	48 - 68	**O**		
2.8 - 4.2	**R**	53 - 80	**L**		

● Dimensions

See page 01/26 for standard contactor and starter.
See page 01/35 for reversing contactor and starter.
See page 01/42 for DC operated contactor.

See page 01/94 for thermal overload relay.

Downloaded from Arrow.com.

DC contactor SB series UL [File No. E42419], CSA [File No. LR20479]

Discontinued

Type	Ordering code	Main contact arrangement	Current ratings (A) Variable-speed motor control 2NO (in series)*1 110V/240V	440V/500V	1NC (dynamic brake)*2 110V/240V	440V/500V	DC motor control (DC2, class4) 2NO (in series) 110V	240V	440V	500V	Continuous current (A) NO	NC
SB-2N/UL	SB351AA-■□	2NO	50	35	75	75	40	35	18	15	50	50
SB-2NB/UL	SB351AB-21■□	2NO+1NC										
SB-2N/SEUL	SB351SA-■□	2NO	50	35	75	75	40	35	18	15	50	50
SB-2NB/SEUL	SB351SB-21■□	2NO+1NC										
SB-5N/UL	SB851BA-■□	2NO	110	110	165	165	85	85	60	45	110	100
SB-5NB/UL	SB851BB-■□	2NO+1NC										
SB-6N/UL	SB1C1BA-■□	2NO	140	140	210	210	125	120	80	50	140	100
SB-6NB/UL	SB1C1BB-■□	2NO+1NC										
SB-10N/UL	SB2A1BA-■□	2NO	240	240	360	360	240	200	120	100	240	160
SB-10NB/UL	SB2A1BB-■□	2NO+1NC										
SB-11N/UL	SB2K1BA-■□	2NO	320	320	480	480	320	290	200	150	320	200
SB-11NB/UL	SB2K1BB-■□	2NO+1NC										

Notes:
- Enter the coil voltage code in the ■ mark.
- Enter the auxiliary contact arrangement in the □ mark.
- 22: 2NO+2NC (standard), 33: 3NO+3NC (on request), 44: 4NO+4NC (on request)

*1 NO contacts are capable of making 2 times of listed current ratings.
*2 NC contacts are capable of making 1 time of listed current ratings.

- On-load factor is 50%, operating cycle is 600 cycles per hour.
- Breaking condition : No voltage

● Auxiliary contact ratings

Rating code	Continuous current (A)	Current ratings (A) Voltage	Make	Break
A600	10	120V AC	60	6
		240V AC	30	3
		480V AC	15	1.5
		600V AC	12	1.2
Q300	10	125V DC	0.55	0.55
		250V DC	0.27	0.27

Optional units UL[File No. E42419], CSA [File No. LR20479]

Description		Type	Ordering code		Used with
Auxiliary contact block	Front mounting	**SZ-A40**	SZ1A40	4NO	SC-03 to 5-1 SH-4,5 SC-N1 to N3
		SZ-A31	SZ1A31	3NO+1NC	
		SZ-A22	SZ1A22	2NO+2NC	
		SZ-A20	SZ1A20	2NO	
		SZ-A11	SZ1A11	1NO+1NC	
		SZ-A02	SZ1A02	2NC	
	Side mounting	**SZ-AS1**	SZ1AS1	1NO+1NC	SC-03 to N3 SC-N4 to N12
		SZ-AS2	SZ1AS2	1NO+1NC	
Mechanical interlock unit		**SZ-RM**	SZ1RM		SC-03 to 5-1 SC-N1 to N3
Coil surge suppression unit	Varistor	**SZ-Z1**	SZ1Z1	24 to 48V AC/DC	SC-03 to 5-1 SH-4, 5
		SZ-Z2	SZ1Z2	100 to 250V AC/DC	
		SZ-Z3	SZ1Z3	380 to 440V AC/DC	
		SZ-Z6*2	SZ1Z6	24 to 48V AC/DC	
		SZ-Z7*2	SZ1Z7	100 to 250V AC/DC	
		SZ-Z31	SZ2Z31	24 to 48V AC/DC	SC-N1 to N3 SC-N1/G to N3/G
		SZ-Z32	SZ2Z32	100 to 250V AC/DC	
		SZ-Z33	SZ2Z33	380 to 440V AC/DC	SC-N1 to N3
		SZ-Z41	SZ2Z41	24 to 48V AC	SC-N4, N5A
		SZ-Z42	SZ2Z42	100 to 250V AC	
		SZ-Z43	SZ2Z43	380 to 440V AC	
	CR	**SZ-Z4**	SZ1Z4	24 to 48V AC/DC	SC-03 to 5-1 SH-4, 5
		SZ-Z5	SZ1Z5	100 to 250V AC/DC	
		SZ-Z8*2	SZ1Z8	24 to 48V AC/DC	
		SZ-Z9*2	SZ1Z9	100 to 250V AC/DC	
		SZ-Z34	SZ2Z34	24 to 48V AC	SC-N1 to N3
		SZ-Z35	SZ2Z35	100 to 250V AC	
		SZ-Z36	SZ2Z36	24 to 48V DC	SC-N1/G to N3/G
		SZ-Z37	SZ2Z37	100 to 250V DC	
		SZ-Z44	SZ2Z44	24 to 48V AC	SC-N4, N5A
		SZ-Z45	SZ2Z45	100 to 250V AC	

Notes: *1 Overlapping
*2 With LED

● Dimensions

Same as standard type

See page 01/81.

Description		Type	Ordering code	Used with
Main circuit surge suppression unit		**SZ-ZM1**	SZ1ZM1	SC-03 to 5-1
		SZ-ZM2	SZ1ZM2	SC-03 to 5-1
		SZ-ZM3	SZ1ZM3	SC-N1 to N3
		SZ-ZM4	SZ1ZM4	SC-N1 to N3
Terminal cover	For contactor and industrial relay	**SZ-T1**	SZ1T1	SC-03, 0, SH-4
		SZ-T2	SZ1T2	SC-05, SH-5
		SZ-T3	SZ1T3	SC-4-0, 4-1
		SZ-T4	SZ1T4	SC-5-1
		SZ-T22	SZ2T22	SC-N1, N2
		SZ-T23	SZ2T23	SC-N2S, N3
		SZ-N4T	SZ2N4T	SC-N4, N5, SW-N4/3H,N5A/3H
		SZ-N6T	SZ2N6T	SC-N6, SW-N6/3H
		SZ-N7T	SZ2N7T	SC-N7, SW-N7/3H
		SZ-N8T	SZ2N8T	SC-N8, N10, SW-N8/3H, N10/3H
		SZ-Z11T	SZ2N11T	SC-N11, N12, SW-N11/3H, N12/3H
		SZ-WN4T	SZ2WN7T	SW-N4/3H,N5A/3H
		SZ-WN6T	SZ2WN7T	SW-N6/3H
		SZ-WN7T	SZ2WN7T	SW-N7/3H
		SZ-WN8T	SZ2WN7T	SW-N8/3H
		SZ-WN10T	SZ2WN7T	SW-N10/3H
		SZ-WZ11T	SZ2WN7T	SW-N11/3H, N12/3H
	For auxiliary contact block	**SZ-T5**	SZ1T5	SZ-A40, SZ-A31, SZ-A22
		SZ-T6	SZ1T6	SZ-A20, SZ-A11, SZ-A02
		SZ-T7	SZ1T7	SZ-AS1, SZ-AS2
	For thermal overload relay	**SZ-T10**	SZ1T10	SZ-HB
		SZ-T11	SZ1T11	SZ-HC
		SZ-T12	SZ1T12	TR-0N/3, TK-0N
		SZ-T13	SZ1T13	TR-5-1N/3, TK-5-1N
		SZ-T14	SZ2T14	TR-N2H/3, TK-N2H
		SZ-T15	SZ2T15	TR-N3H/3, TK-N3H
		SZ-RN6T	SZ2RN6T	TR-N6H/3, TK-N6H
		SZ-T16	SZ2T16	TR-N2/3, TK-N2
		SZ-T17	SZ2T17	TR-N3/3, TK-N3
Base unit for separate mounting		**SZ-HB**	TZ1HB	TR-0N/3, TK-0N
		SZ-HC	TZ1HC	TR-5-1N/3, TK-5-1N
		SZ-HD	TZ2HD	TR-N2/3, TK-N2
		SZ-HE	TZ2HE	TR-N3/3, TK-N3
Reset release button		**SZ-R1**	TZ1R1	TR-0N/3, TK-0N, TR-5-1N/3
		SZ-R2	TZ1R2	TK-5-1N
		SZ-R3	TZ1R3	TR-N10/3 to N14/3, TK-N10 to N14
		SZ-R4	TZ2R4	TR-N2/3 to N8/3
		SZ-R5	TZ2R5	TR-N2 to N8
		SZ-R6	TZ2R6	
Dial cover		**SZ-DA**	SZ1DA	TR-0N/3 to N14/3 TK-0N to TK-N14

Downloaded from Arrow.com.

Definite purpose contactors UL [File No. E42419], CSA [File No. LR20479]

Type	Ordering code		Terminal	Auxiliary contact arrangement	Motor capacity (HP) Single-phase 110V 120V	Single-phase 220V 240V	3-phase 200V	3-phase 220V 240V	3-phase 440V 480V	3-phase 550V 600V	Thermal continuous current (A)
FC-0UL	SF12B1A-■10*1	●	Screw	1NO	1/2	1	1	1	–	–	15
FC-0TUL	SF12B3A-■10*1	●	Tab								
FC-0SUL	SF15B1A-■10*1	●	Screw								
FC-0STUL	SF15B3A-■10*1	●	Tab								
FC-1UL	SF20B1A-■11*2	●	Screw	1NO +1NC	1	2	5	5	7.5	7.5	20
FC-1SUL	SF26B1A-■11*2	●	Screw		2	3	5	7.5	10	7.5	26
FC-2SUL	SF38B1A-■11*2	●	Screw		3	5	10	10	15	10	35
FC-3UL	SF50B1A-■11*2	●	Screw		3	7.5	10	15	25	15	45
FC-4UL	SF65B1A-■11*2	●	Screw		5	10	15	20	30	25	65
FC-0/GUL	SF12B1G-■10*1	●	Screw	1NO	1/2	1	1	1	–	–	15
FC-0T/GUL	SF12B3G-■10*1	●	Tab								
FC-0S/GUL	SF15B1G-■10*1	●	Screw								
FC-0ST/GUL	SF15B3G-■10*1	●	Tab								

Notes: *1 1NO is standard, 1NC is also available on request. ● Approved ■ Coil voltage code
*2 1NO+1NC is standard, 2NO or 2NC is also available on request.

Auxiliary contact ratings

Type	Rating code	Thermal continuous current (A)	Current ratings (A) 120V AC Make	120V AC Break	240V AC Make	240V AC Break	480V AC Make	480V AC Break	600V AC Make	600V AC Break	Maximum (VA) Make	Maximum (VA) Break
FC-0UL **FC-0TUL** **FC-0SUL** **FC-0STUL**	B300	5	30	3	15	1.5	–	–	–	–	3600	360
FC-1UL **FC-1SUL** **FC-2SUL** **FC-3UL** **FC-4UL**	A600	10	60	6	30	3	15	1.5	12	1.2	7200	720
FC-0/GUL **FC-0T/GUL** **FC-0S/GUL** **FC-0ST/GUL**	B300	5	30	3	15	1.5	–	–	–	–	3600	360

Operating coil voltage

FC-0UL, 0TUL, 0SUL, 0STUL, 1UL, FC-1SUL, 2SUL, 3UL, 4UL

Voltage and frequency			Code
24V	50Hz/24 – 26V	60Hz	**E**
48V	50Hz/48 – 52V	60Hz	**F**
100V	50Hz/100 – 110V	60Hz	**1**
100 – 110V	50Hz/110 – 120V	60Hz	**H**
110 – 120V	50Hz/120 – 130V	60Hz	**K**
200V	50Hz/200 – 220V	60Hz	**2**
200 – 220V	50Hz/220 – 240V	60Hz	**M**

FC-0/GUL, 0T/GUL
FC-0S/GUL, 0ST/GUL

Voltage	Code
24V DC	**E**
48V DC	**F**
100V DC	**1**
110V DC	**H**
200V DC	**2**
220V DC	**M**

■ Dimensions, mm

See page 01/83.

■ Wiring diagrams

FC-0UL, 0TUL, 0/GUL, 0T/GUL
FC-0SUL, 0STUL, 0S/GUL, 0ST/GUL

1NO

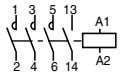

1NO+1NC

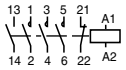

FC-1UL, 1SUL, 2SUL, 3UL, 4UL

1NO+1NC

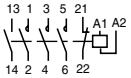

Downloaded from Arrow.com.

Solid-state contactors SS series UL [File No. E132864, E142975]
Single pole type

● Main circuit 240V AC, SS101 to SS2001

Type	**SS101-5Z-A3** **SS101-5Z-A4** **SS101-3Z-D3**	**SS201-5Z-A3** **SS201-5Z-A4** **SS201-3Z-D3**	**SS301-5Z-A3** **SS301-5Z-A4** **SS301-3Z-D3**	**SS401-5Z-A3** **SS401-5Z-A4** **SS401-3Z-D3**	**SS501-5Z-A3** **SS501-5Z-A4** **SS501-3Z-D3**
Ordering code	SS101-5ZA3 SS101-5ZA4 SS101-3ZD3	SS201-5ZA3 SS201-5ZA4 SS201-3ZD3	SS301-5ZA3 SS301-5ZA4 SS301-3ZD3	SS401-5ZA3 SS401-5ZA4 SS401-3ZD3	SS501-5ZA3 SS501-5ZA4 SS501-3ZD3
Rated thermal current(A) *	10	20	30	40	50
Control voltage	A3 : 100V-120V AC, A4 : 200-240V AC, D3 : 5-24V DC				

Type	**SS701-1Z-A3** **SS701-1Z-A4** **SS701-3Z-D3**	**SS1001-1Z-A3** **SS1001-1Z-A4** **SS1001-3Z-D3**	**SS1501-1Z-A3** **SS1501-1Z-A4** **SS1501-3Z-D3**	**SS2001-1Z-A3** **SS2001-1Z-A4** **SS2001-3Z-D3**	
Ordering code	SS701-1ZA3 SS701-1ZA4 SS701-3ZD3	SS1A1-1ZA3 SS1A1-1ZA4 SS1A1-3ZD3	SS1F1-1ZA3 SS1F1-1ZA4 SS1F1-3ZD3	SS1A1-1ZA3 SS1A1-1ZA4 SS1A1-3ZD3	
Rated thermal current(A) *	70	100	150	200	
Control voltage	A3 : 100V-120V AC, A4 : 200-240V AC, D3 : 5-24V DC				

● Main circuit 480V AC, SS701H to SS2001H

Type	**SS701H-1Z-A3** **SS701H-1Z-A4** **SS701H-3Z-D3**	**SS1001H-1Z-A3** **SS1001H-1Z-A4** **SS1001H-3Z-D3**	**SS1501H-1Z-A3** **SS1501H-1Z-A4** **SS1501H-3Z-D3**	**SS2001H-1Z-A3** **SS2001H-1Z-A4** **SS2001H-3Z-D3**	
Ordering code	SS701H-1ZA3 SS701H-1ZA4 SS701H-3ZD3	SS1A1H-1ZA3 SS1A1H-1ZA4 SS1A1H-3ZD3	SS1F1H-1ZA3 SS1F1H-1ZA4 SS1F1H-3ZD3	SS1A1H-1ZA3 SS1A1H-1ZA4 SS1A1H-3ZD3	
Rated thermal current(A) *	70	100	150	200	
Control voltage	A3 : 100V-120V AC, A4 : 200-240V AC, D3 : 5-24V DC				

Note: * The values are maximum ratings that apply at an ambient temperature not exceeding 40°C.

3-pole type

● Main circuit 240V AC

Contactor 3-pole, 2-element Basic type	Basic ordering code	3-pole, 3-element Basic type	Basic ordering code	Cooling fin to be combined 3-pole, 2-element Basic type	Basic ordering code	3-pole, 3-element Basic type	Basic ordering code	Continuous current (A)	Motor ratings 3-phase 220V AC 60Hz Capacity (HP)	Full load current (A)
SS032	SS032	**SS033**	SS033	–	–	–	–	3	1/2	2
SS082	SS082	**SS083**	SS083	*	*	*	*	8	3/4	2.9
SS202	SS202	**SS203**	SS203	**SX1-D10**	SY1D0	**SX1-D10**	SY1D0	20	1 1/2	5.2
SS302	SS302	**SS303**	SS303	**SX1-D10**	SY1D0	**SX1-E12**	SY1E2	30	2	5.8
SS402	SS402	**SS403**	SS403	**SX1-D14**	SY1D4	**SX1-E12**	SY1E2	40	3	9.6
SS502	SS502	**SS503**	SS503	**SX1-E12**	SY1E2	**SX1-E17**	SY1E7	50	5	15.2
SS802	SS802	**SS803**	SS803	**SX1-C12**	SY1C2	**SX1-C12**	SY1C2	80	10	28
SS1202	SS1C2	**SS1203**	SS1C3	**SX1-C12**	SY1C2	**SX1-C12**	SY1C2	120	10	28

Note: * Cooling fin provided

● Main circuit 480V AC

Contactor 3-pole, 2-element Basic type	Basic ordering code	3-pole, 3-element Basic type	Basic ordering code	Cooling fin to be combined 3-pole, 2-element Basic type	Basic ordering code	3-pole, 3-element Basic type	Basic ordering code	Continuous current (A)	Motor ratings 3-phase 440V AC 60Hz Capacity (HP)	Full load current (A)
SS302H	SS302H	**SS303H**	SS303H	**SX1-E12**	SY1E2	**SX1-E12**	SY1E2	30	–	–
SS502H	SS502H	**SS503H**	SS503H	**SX1-E12**	SY1E2	**SX1-E17**	SY1E7	50	10	17
SS802H	SS802H	**SS803H**	SS803H	**SX1-C12**	SY1C2	**SX1-C12**	SY1C2	80	20	32.5
SS1202H	SS1C2H	**SS1203H**	SS1C3H	**SX1-C12**	SY1C2	**SX1-C12**	SY1C2	120	20	32.5

● Input voltage

100–120/200–240V AC
100–120V AC
200–240V AC
12/24V DC
12–24V DC
5V DC
5–24V DC

Note: For details, *see page 01/119.*

Downloaded from Arrow.com.

TÜV approved

■ Description

FUJI contactors and starters introduced in this section are TÜV approved products as they are.

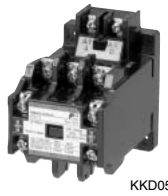
KKD05-265

FC-1UL

KK04-090

SC-N3

Contactor SC series

AC operated Type	Ordering code	DC operated Type	Ordering code	Max. motor capacity (kW)*5 3-phase 200V 240V	380V 440V	Rated operational current (A)*5 3-phase 200V 240V	380V 440V	Continuous current (A)	Auxiliary contact NO	NC
SC-03	SC11AA-■10	**SC-03/G**	SC11AG-■10	2.5	4	11	9	20	1	– *1
SC-0	SC13AA-■10	**SC-0/G**	SC13AG-■10	3.5	5.5	13	12	20	1	– *1
SC-05	SC14AA-■11	**SC-05/G**	SC14AG-■11	3.5	5.5	13	12	20	1	1 *2
SC-4-0	SC18AA-■10	**SC-4-0/G**	SC18AG-■10	4.5	7.5	18	16	25	1	– *1
SC-4-1	SC19AA-■10	**SC-4-1/G**	SC19AG-■10	5.5	11	22	22	32	1	– *1
SC-5-1	SC20AA-■11	**SC-5-1/G**	SC20AG-■11	5.5	11	22	22	32	1	1 *3
SC-N1	SC25BAA-■22	**SC-N1/G**	SC25BAG-■22	7.5	15	32	32	50	2	2 *4
SC-N2	SC35BAA-■22	**SC-N2/G**	SC35BAG-■22	11	18.5	40	40	60	2	2 *4
SC-N2S	SC50BAA-■22	**SC-N2S/G**	SC50BAG-■22	15	22	50	50	80	2	2 *4
SC-N3	SC65BAA-■22	**SC-N3/G**	SC65BAG-■22	18.5	30	65	65	100	2	2 *4
SC-N4	SC80BAA-■22	**SC-N4/SE**	SC80BAS-■22	22	40	80	80	135	2	2 *4
SC-N5A	SC93CAA-■22	**SC-N5**	SC93BAA-■22	30	55	105	105	150	2	2 *4
SC-N6	SC1CBAA-■22	**SC-N6**	SC1CBAA-■22	37	60	125	125	150	2	2 *4
SC-N7	SC1FBAA-■22	**SC-N7**	SC1FBAA-■22	45	75	150	150	200	2	2 *4
SC-N8	SC1JBAA-■22	**SC-N8**	SC1JBAA-■22	55	90	180	180	260	2	2 *4
SC-N10	SC2CBAA-■22	**SC-N10**	SC2CBAA-■22	65	110	220	220	260	2	2 *4
SC-N11	SC3ABAA-■22	**SC-N11**	SC3ABAA-■22	90	160	300	300	350	2	2 *4
SC-N12	SC4ABAA-■22	**SC-N12**	SC4ABAA-■22	120	220	400	400	450	2	2 *4
SC-N14	SC6ABAA-■22	**SC-N14**	SC6ABAA-■22	180	315	600	600	660	2	2 *4
SC-N16	SC8ABAA-■22	**SC-N16**	SC8ABAA-■22	220	440	800	800	800	2	2 *4

Notes: *1 Auxiliary contact 1NC is available on request.
*2 Auxiliary contact 2NO or 2NC is available on request.
*3 Auxiliary contact 2NC, 2NO or 2NO+2NC is available on request.
■ Coil voltage code
*4 Auxiliary contact 4NO+4NC is available on request for frame size N1 and above.
*5 Conforming to IEC 60947-4-1 AC-3

Thermal overload relays

Standard Type	Ordering code	2E type Type	Ordering code	Setting current range (A)	Reset	Used with
TR-0N/3 **TR-0NH/3**	TR13DW-□ TR13DH-□	**TK-0N** **TK-0NH**	TR13EW-□ TR13EH-□	0.1–0.15, 0.13–0.2, 0.15–0.24, 0.2–0.3, 0.24–0.36 0.3–0.45, 0.36–0.54, 0.48–0.72, 0.64–0.96, 0.8–1.2 0.95–1.45, 1.4–2.2, 1.7–2.6, 2.2–3.4, 2.8–4.2, 4–6 5–8, 6–9, 7–11, 9–13	Manual/auto	SC-03 SC-0 SC-05
TR-5-1N/3 **TR-5-1NH/3**	TR20DW-□ TR20DH-□	**TK-5-1N** **TK-5-1NH**	TR20EW-□ TR20EH-□	0.1–0.15, 0.13–0.2, 0.15–0.24, 0.2–0.3, 0.24–0.36 0.3–0.45, 0.36–0.54, 0.48–0.72, 0.64–0.96, 0.8–1.2 0.95–1.45, 1.4–2.2, 1.7–2.6, 2.2–3.4, 2.8–4.2, 4–6 5–8, 6–9, 7–11, 9–13, 12–18, 16–22	Manual/auto	SC-4-0 SC-4-1 SC-5-1
TR-N2/3 **TR-N2H/3**	TR35BDW-□ TR35BDH-□	**TK-N2** **TK-N2H**	TR35BEW-□	4–6, 5–8, 6–9, 7–11, 9–13, 12–18, 18–26 24–36, 32–42	Manual/auto	SC-N1 SC-N2
TR-N3/3 **TR-N3H/3**	TR65BDW-□ TR65BDH-□	**TK-N3** **TK-N3H**	TR65BEW-□	7–11, 9–13, 12–18, 18–26, 24–36, 28–40 34–50, 45–65, 48–68, 53–80, 65–95, 85–105	Manual/auto	SC-N2S SC-N3
TR-N5/3	TR93BDW-□	**TK-N5**	TR93BEW-□ TR93BEH-□	18–26, 24–36, 28–40, 34–50, 45–65, 53–80 65–95, 85–105	Manual/auto	SC-N4 SC-N5A
TR-N6/3 **TR-N6H/3**	TR1CBDW-□ TR1CBDH-□	**TK-N6** **TK-N6H**	TR1CBEW-□ TR1CBEH-□	45–65, 53–80, 65–95, 85–125, 110–160	Manual/auto	SC-N6
TR-N7/3	TR1FBDW-□	**TK-N7**	TR1FBEW-□	45–65, 53–80, 65–95, 85–125,110–160	Manual/auto	SC-N7
TR-N8/3	TR1JBDW-□	**TK-N8**	TR1JBEW-□	65–95, 85–125, 110–160, 125–185	Manual/auto	SC-N8
TR-N10/3 **TR-N10H/3**	TR2CBDW-□ TR2CBDH-□	**TK-N10** **TK-N10H**	TR2CBEW-□ TR2CBEH-□	85–125, 110–160, 125–185, 160–240	Manual/auto	SC-N10
TR-N12/3 **TR-N12H/3**	TR4ABDW-□ TR4ABDH-□	**TK-N12** **TK-N12H**	TR4ABEW-□ TR4ABEH-□	110–160, 125–185, 160–240, 200–300 240–360, 300–450	Manual/auto	SC-N11 SC-N12
TR-N14/3 **TR-N14H/3**	TR6ABDW-□ TR6ABDH-□	**TK-N14** **TK-N14H**	TR6ABEW-□ TR6ABEH-□	240–360, 300–450, 400–600	Manual/auto	SC-N14

Note: □ Thermal overload relay ampere setting range code, *see page 01/123.*

Downloaded from Arrow.com.

Optional units (Auxiliary contact blocks)

Type	Ordering code	Description	Contact arrangement	Continuous current (A)	Operational current (A) AC-15 100–120V	200–240V	380–440V	500–600V	Used with
SZ-A40	SZ1A40	Front mounting	4NO	10	6	3	1.5	1.2	SC-03 to SC-N3
SZ-A31	SZ1A31		3NO+1NC						
SZ-A22	SZ1A22		2NO+2NC						
SZ-A20	SZ1A20		2NO						
SZ-A11	SZ1A11		1NO+1NC						
SZ-A02	SZ1A02		2NC						
SZ-AS1	SZ1AS1	Side mounting	1NO+1NC						
SZ-AS2	SZ2AS2		1NO+1NC						SC-N4 to SC-N12
SZ-AS3H	SZ2AS3H		1NO+1NC	10	6	6	4	2.5	SC-N14, SC-N16

Contactors FC series

AC operated Type	Ordering code	DC operated Type	Ordering code	Max. motor capacity (kW) *3 3-phase 200V 240V	380V 440V	Operational current (A) *3 3-phase 200V 240V	380V 440V	Continuous current (A)	Contact arrangement Main contact	Aux. contact
FC-0UL	SF12B1A-■10	**FC-0/GUL**	SF12B1G-■10	3.0	2.5	12	6	20	3NO	1NO *1
FC-0TUL	SF12B3A-■10	**FC-0T/GUL**	SF12B3G-■10	2.2	2.5	12	6	20	3NO	1NO *1
FC-0SUL	SF15B1A-■10	**FC-0S/GUL**	SF15B1G-■10	3.5	4.5	15	10	20	3NO	1NO *1
FC-0STUL	SF15B3A-■10	**FC-0ST/GUL**	SF15B3G-■10	3.5	4.5	15	10	20	3NO	1NO *1
FC-1UL	SF20B1A-■11	–	–	5.5	5.5	20	13	30	3NO	1NO+1NC
FC-1SUL	SF26B1A-■11	–	–	7.5	7.5	27	18	30	3NO	1NO+1NC
FC-2SUL	SF35B1A-■11	–	–	11	11	40	26	45	3NO	1NO+1NC *2
FC-3UL	SF50B1A-■11	–	–	15	18.5	52	40	60	3NO	1NO+1NC *2
FC-4UL	SF65B1A-■11	–	–	18.5	30	65	65	80	3NO	1NO+1NC *2

Notes: *1 Auxiliary contact 1NC is available on request.
*2 Auxiliary contact 2NO or 2NC is available on request.
*3 Conforming to IEC 60497-4-1 AC-3
■Coil voltage code

Downloaded from Arrow.com.

Solid-state contactors SS series
Single pole type
● Main circuit 240V AC, SS101 to SS2001

Type	**SS101-5Z-A3** **SS101-5Z-A4** **SS101-3Z-D3**	**SS201-5Z-A3** **SS201-5Z-A4** **SS201-3Z-D3**	**SS301-5Z-A3** **SS301-5Z-A4** **SS301-3Z-D3**	**SS401-5Z-A3** **SS401-5Z-A4** **SS401-3Z-D3**	**SS501-5Z-A3** **SS501-5Z-A4** **SS501-3Z-D3**
Ordering code	SS101-5ZA3 SS101-5ZA4 SS101-3ZD3	SS201-5ZA3 SS201-5ZA4 SS201-3ZD3	SS301-5ZA3 SS301-5ZA4 SS301-3ZD3	SS401-5ZA3 SS401-5ZA4 SS401-3ZD3	SS501-5ZA3 SS501-5ZA4 SS501-3ZD3
Rated thermal current(A) *	10	20	30	40	50
Control voltage	A3 : 100V-120V AC, A4 : 200-240V AC, D3 : 5-24V DC				

Type	**SS701-1Z-A3** **SS701-1Z-A4** **SS701-3Z-D3**	**SS1001-1Z-A3** **SS1001-1Z-A4** **SS1001-3Z-D3**	**SS1501-1Z-A3** **SS1501-1Z-A4** **SS1501-3Z-D3**	**SS2001-1Z-A3** **SS2001-1Z-A4** **SS2001-3Z-D3**	
Ordering code	SS701-1ZA3 SS701-1ZA4 SS701-3ZD3	SS1A1-1ZA3 SS1A1-1ZA4 SS1A1-3ZD3	SS1F1-1ZA3 SS1F1-1ZA4 SS1F1-3ZD3	SS1A1-1ZA3 SS1A1-1ZA4 SS1A1-3ZD3	
Rated thermal current(A) *	70	100	150	200	
Control voltage	A3 : 100V-120V AC, A4 : 200-240V AC, D3 : 5-24V DC				

● Main circuit 480V AC, SS701H to SS2001H

Type	**SS701H-1Z-A3** **SS701H-1Z-A4** **SS701H-3Z-D3**	**SS1001H-1Z-A3** **SS1001H-1Z-A4** **SS1001H-3Z-D3**	**SS1501H-1Z-A3** **SS1501H-1Z-A4** **SS1501H-3Z-D3**	**SS2001H-1Z-A3** **SS2001H-1Z-A4** **SS2001H-3Z-D3**	
Ordering code	SS701H-1ZA3 SS701H-1ZA4 SS701H-3ZD3	SS1A1H-1ZA3 SS1A1H-1ZA4 SS1A1H-3ZD3	SS1F1H-1ZA3 SS1F1H-1ZA4 SS1F1H-3ZD3	SS1A1H-1ZA3 SS1A1H-1ZA4 SS1A1H-3ZD3	
Rated thermal current(A) *	70	100	150	200	
Control voltage	A3 : 100V-120V AC, A4 : 200-240V AC, D3 : 5-24V DC				

Note: * The values are maximum ratings that apply at an ambient temperature not exceeding 40°C.

Downloaded from Arrow.com.

3-pole type

● Main circuit 240V AC

Contactor 3-pole, 2-element Basic type	Basic ordering code	3-pole, 3-element Basic type	Basic ordering code	Cooling fin to be combined 3-pole, 2-element Basic type	Basic ordering code	3-pole, 3-element Basic type	Basic ordering code	Continuous current (A)	Motor ratings 3-phase 220V AC 60Hz Capacity (HP)	Full load current (A)
SS032	SS032	**SS033**	SS033	–	–	–	–	3	0.5	1.8
SS082	SS082	**SS083**	SS083	*	*	*	*	8	0.75	3.2
SS202	SS202	**SS203**	SS203	**SX1-D10**	SY1D0	**SX1-D10**	SY1D0	20	1.5	8
SS302	SS302	**SS303**	SS303	**SX1-D10**	SY1D0	**SX1-E12**	SY1E2	30	2	11
SS402	SS402	**SS403**	SS403	**SX1-D14**	SY1D4	**SX1-E12**	SY1E2	40	3	17.4
SS502	SS502	**SS503**	SS503	**SX1-E12**	SY1E2	**SX1-E17**	SY1E7	50	5	26
SS802	SS802	**SS803**	SS803	**SX1-C12**	SY1C2	**SX1-C12**	SY1C2	80	10	34
SS1202	SS1C2	**SS1203**	SS1C3	**SX1-C12**	SY1C2	**SX1-C12**	SY1C2	120	10	34

Note: * Cooling fin provided

● Main circuit 480V AC

Contactor 3-pole, 2-element Basic type	Basic ordering code	3-pole, 3-element Basic type	Basic ordering code	Cooling fin to be combined 3-pole, 2-element Basic type	Basic ordering code	3-pole, 3-element Basic type	Basic ordering code	Continuous current (A)	Motor ratings 3-phase 440V AC 60Hz Capacity (HP)	Full load current (A)
SS302H	SS302H	**SS303H**	SS303H	**SX1-E12**	SY1E2	**SX1-E12**	SY1E2	30	–	–
SS502H	SS502H	**SS503H**	SS503H	**SX1-E12**	SY1E2	**SX1-E17**	SY1E7	50	10	24
SS802H	SS802H	**SS803H**	SS803H	**SX1-C12**	SY1C2	**SX1-C12**	SY1C2	80	20	48
SS1202H	SS1C2H	**SS1203H**	SS1C3H	**SX1-C12**	SY1C2	**SX1-C12**	SY1C2	120	20	48

● Input voltage

100–120/200–240V AC
100–120V AC
200–240V AC

12/24V DC
5–24V DC

5–12V DC
12–24V DC
5V DC

100–110/200–220V AC/DC
12/24V AC/DC

Note: For details, *see page 01/118.*

Downloaded from Arrow.com.

China Compulsory Certification (CCC)

■ Description

FUJI contactors and thermal overload relays are approved by CCC.
Ratings, dimensions and wiring diagrams are same as standard type.

■ Ordering information

When ordering CCC products, add the suffix (CCC) to the type number.
Example of magnetic contactor:
SC-5-1 220V AC 50Hz 1NO+1NC (CCC)

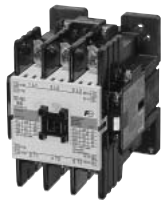

KK04-090

SC-N3

FC-0UL

Magnetic contactors (AC operated, DC operated, With SUPER MAGNET)

AC operated		DC operated		With SUPER MAGNET		Certification number
Non reversing Type	Reversing Type	Non reversing Type	Reversing Type	Non reversing Type	Reversing Type	
SC-03 SC-0 SC-05	SC-03RM SC-0RM SC-05RM	SC-03/G SC-0/G SC-05/G	SC-03RM/G SC-0RM/G SC-05RM/G	–	–	2003010304063432
SC-4-0 SC-4-1 SC-5-1	SC-4-0RM SC-4-1RM SC-5-1RM	SC-4-0/G SC-4-1/G SC-5-1/G	SC-4-0RM/G SC-4-1RM/G SC-5-1RM/G	–	–	2003010304063438
SC-N1 SC-N2	SC-N1RM SC-N2RM	SC-N1/G SC-N2/G	SC-N1RM/G SC-N2RM/G	SC-N1/SE SC-N2/SE	SC-N1RM/SE SC-N2RM/SE	2003010304063394
SC-N2S SC-N3	SC-N2SRM SC-N3RM	SC-N2S/G SC-N3/G	SC-N2SRM/G SC-N3RM/G	SC-N2S/SE SC-N3/SE	SC-N2SRM/SE SC-N3RM/SE	2003010304067046
SC-N4 SC-N5	SC-N4RM SC-N5RM	–	–	SC-N4/SE	SC-N4RM/SE	2003010304063396
SC-N6	SC-N6RM	–	–	–	–	2003010304063437
SC-N7	SC-N7RM	–	–	–	–	2003010304063436
SC-N8 SC-N10	SC-N8RM SC-N10RM	–	–	–	–	2003010304063435
SC-N11 SC-N12	SC-N11RM SC-N12RM	–	–	–	–	2003010304063393
SC-N14 SC-N16	SC-N14RM –	– –	– –	– –	– –	2003010304067052

Downloaded from Arrow.com.

Magnetic contactors (With extra pick-up operating coil, with high capacity auxiliary contact)

With extra pick-up operating coil		With high capacity auxiliary contact (single button contact)		Certification number
Non reversing Type	Reversing Type	Non reversing Type	Reversing Type	
SC-03/U SC-0/U SC-05/U	SC-03RM/U SC-0RM/U SC-05RM/U	SC-03H SC-0H SC-05H	SC-03HRM SC-0HRM SC-05HRM	2003010304063432
SC-4-0/U SC-4-1/U SC-5-1/U	SC-4-0RM/U SC-4-1RM/U SC-5-1RM/U	SC-4-0H SC-4-1H SC-5-1H	SC-4-0HRM SC-4-1HRM SC-5-1HRM	2003010304063438
SC-N1/U SC-N2/U	SC-N1RM/U SC-N2RM/U	SC-N1H SC-N2H	SC-N1HRM SC-N2HRM	2003010304063394
SC-N2S/U SC-N3/U	SC-N2SRM/U SC-N3RM/U	SC-N2SH SC-N3H	SC-N2SHRM SC-N3HRM	2003010304067046
SC-N4/U –	SC-N4RM/U –	SC-N4H SC-N5H	SC-N4HRM SC-N5HRM	2003010304063396
–	–	SC-N6H	SC-N6HRM	2003010304063437
–	–	SC-N7H	SC-N7HRM	2003010304063436
–	–	SC-N8H SC-N10H	SC-N8HRM SC-N10HRM	2003010304063435
–	–	SC-N11H SC-N12H	SC-N11HRM SC-N12HRM	2003010304063393

FC series magnetic contactors

AC operated		DC operated		Certification number
Standard Type	UL, CSA approved Type	Standard Type	UL, CSA approved Type	
FC-0 FC-0T FC-0S FC-0ST	FC-0UL FC-0TUL FC-0SUL FC-0STUL	FC-0/G FC-0T/G FC-0S/G FC-0ST/G	FC-0/GUL FC-0T/GUL – –	2003010304088942
FC-1 FC-1S	FC-1UL FC-1SUL	– –	– –	2003010304088935
FC-2S FC-3	FC-2SUL FC-3UL	– –	– –	2003010304088929
FC-4	FC-4UL	–	–	2003010304088923

Downloaded from Arrow.com.

Optional units (Auxiliary contact block)

Description		Type	Applicable	Certification number
Front mounting	Bifurcated contact	SZ-A40 SZ-A31 SZ-A22 SZ-A20 SZ-A11 SZ-A02	SC-03 to SC-N3 SH-4, 5	Cetified by combination product in the applicable contactor/relay.
	Single button contact	SZ-A40H SZ-A31H SZ-A22H	SC-03 to SC-N3 SH-4, 5	
Side mounting	Bifurcated contact	SZ-AS1	SC-03 to SC-N3 SH-4, 5	
		SZ-AS2	SC-N4 to SC-N12	
	Single button contact	SZ-AS1H	SC-03 to SC-N3 SH-4, 5	
		SZ-AS2H	SC-N4 to SC-N12	
		SZ-AS3H	SC-N14, SC-N16	

Thermal overload relays

Standard type		With phase-loss protection device		Auto reset type		Certification number
On-contactor mounting type	Separate mounting type	On-contactor mounting type	Separate mounting type	On-contactor mounting type	Separate mounting type	
TR-0N/3	TR-0NH/3	TK-0N	TK-0NH	TR-0N/3A	TR-0NH/3A	2003010304063397
TR-5-1N/3	TR-5-1NH/3	TK-5-1N	TK-5-1NH	TR-5-1N/3A	TK-5-1NH/3A	2003010304063400
TR-N2/3	TR-N2H/3	TK-N2	TK-N2H	TR-N2/3A	TR-N2H/3A	2003010304063425
TR-N3/3 TR-N5/3	TR-N3H/3 –	TK-N3 TK-N5	TK-N3H	TR-N3/3A TR-N5/3A	TR-N3H/3A –	2003010304063404
TR-N6/3 TR-N7/3 TR-N8/3	TR-N6H/3 – –	TK-N6 TK-N7 TK-N8	TK-N6H – –	TR-N6/3A TR-N7/3A TR-N8/3A	TR-N6H/3A – –	2003010304063447
TR-N10/3	TR-N10H/3	TK-N10	TK-N10H	TR-N10/3A	TR-N10H/3A	2003010304063429
TR-N12/3	TR-N12H/3	TK-N12	TK-N12H	TR-N12/3A	TR-N12H/3A	2003010304063434
TR-N14/3	TR-N14H/3	TK-N14	TK-N14H	TR-N14/3A	TR-N14H/3A	2003010304063406

Thermal overload relays (Quick operation)

Quick operation		Certification number
On-contactor mounting type	Separate mounting type	
TR-0NQ	TR-0NQH	2003010304063397
TR-5-1NQ	TR-5-1NQH	2003010304063400
TR-N2Q	TR-N2QH	2003010304063425
TR-N3Q TR-N5Q	TR-N3QH –	2003010304063404

Note: Quick operation type with phase-loss prodection device is available.

Thermal overload relays (Used with FC series contactor)

Type	Certification number
TR-0NF/3, TK-0NF, TR-0NFQ, TK-0NFQ	2003010304063397
TR-5-1N/3, TK-5-1N, TR-5-1NQ, TK-5-1NQ	2003010304063400
TR-N2F/3, TK-N2F, TR-N2FQ, TK-N2FQ	2003010304063425
TR-N3/3, TK-N3, TR-N3Q, TK-N3Q	2003010304063404

Downloaded from Arrow.com.

SJ series magnetic contactors and starters

Up to 4kW 440 Volts AC

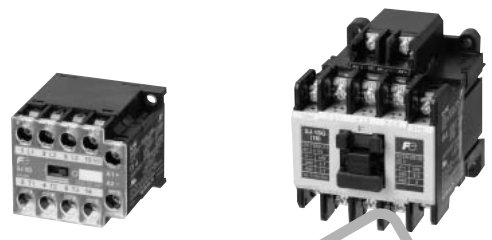

SJ-0G SJ-1SG

KKD06-102, 096

■ Description

SJ type contactor adopts the operating magnet mechanism in which an electromagnet and a permanent magnet are combined, thus allowing the coil power consumption to be reduced.
The contactor can be operated directly by the DC output of programmable controller or electronic equipment.
Reversing contactor and starter are also available. SJ-1SG and SJ-1SWG types are applicable to three-phase motors of 220 Volts AC, 4.5kW which can be driven directly by semiconductor output.

■ Features

- Low power consumption (0G, 06G: 1.4W, 1SG: 2.4W) as well as standard DC-operated models
- High contact reliability
  Provided with bifurcated auxiliary contacts, thus enabling to be inputted to the electronic circuit directly. They can be used in low level circuit of 5V, 3mA.
- Surge suppression
  Provided with a [illegible] surge suppression circuit, which suppresses the [illegible] voltage to 50V or less and 60V or less (SJ-1SG only)
- Rail mounting
  Direct snap-on mounting on 35mm rails

■ Types number nomenclature

S J - 0 - W G R M / N L

Basic type

Frame size
0, 06, 1G

Special version
Blank: Standard type
A: Printed circuit board type
T: Tab terminal type

Blank: Magnetic contactor
W: Motor starter *1

Special version
L: With operating status indicator

Thermal overload relay
N3H: Standard type, 3-element
2E: With phase-loss protective device

Non-reversing or reversing
Blank: Non-reversing
RM: Reversing *2

Operating coil
G: DC operated

*1 Magnetic contactors (SJ- □ G) and thermal overload relays (TR- □ N) have actual type names on nameplates.

*2 Open type reversing magnetic contactors (SJ- □ GRM) and motor starters (SJ- □ WGRM) have no type name on their nameplates describing them as reversing types.

*3 UL and CSA approved is standard.

Discontinued

Downloaded from Arrow.com.

■ Version

Description			Type	Frame size 0	06	1S
Contactor	Without indicating lamp	Non reversing	SJ-□G	●	●	●
		Reversing	SJ-□GRM	●	●	●
	With indicating lamp	Non reversing	SJ-□G/L	–	●	–
		Reversing	SJ-□GRM/L	–	●	–
Starter	Without indicating lamp	Non reversing with OLR*	SJ-□WG/3H	–	–	●
		Non reversing with TR-0N/3Z716	SJ-□WG/N3H	●	●	–
		Non reversing with 2E OLR*	SJ-□WG/2E	●	●	●
		Reversing with OLR*	SJ-□WGRM/3H	–	–	●
		Reversing with TR-0N/3Z716	SJ-□WGRM/N3H	●	●	–
		Reversing with 2E OLR*	SJ-□WGRM/2E	●	●	●
	With indicating lamp	Non reversing with TR-0N/3Z716	SJ-□WG/N3HL	–	●	–
		Non reversing with 2E OLR*	SJ-□WG/2EL	–	●	–
		Reversing with TR-0N/3Z716	SJ-□WGRM/N3HL	–	●	–
		Reversing with 2E OLR*	SJ-□WGRM/2EL	–	●	–

Note: "OLR" means thermal overload relay

□: Frame size 0, 06, 15

■ Types and ratings (IEC 60947-4-1)

Motor capacity (kW) AC-3 3-phase		Operational current (A) AC-3 3-phase		Operational current (A) AC-1 *1	Thermal current (A)	Auxiliary contact		Non-reversing Open Type	Reversing Open Type
200V 240V	380V 440V	200V 240V	380V 440V			NO	NC		
3	2.2	12	6	15	15	1 –	 1	SJ-0G SJ-0G	– SJ-0GRM
3	2.2	12	6	15	15	2 [illegible]	 2	SJ-06G SJ-06G	SJ-06GRM SJ-06GRM
4.5	4	18	9	25	[illegible]	2 1	– 1	SJ-1SG SJ-1SG	– SJ-1SGRM

■ Auxiliary contact ratings (IEC 60947-5-1)

Frame size	Rated thermal current (A)	Voltage (V AC)	Making breaking capacity (A)	Rated operation current (A) Inductive AC-15	Resistive AC-12	Min. operational voltage and current
0G	6	200-240 380-440	[illegible] 20	2 1	6 6	5V DC, 3mA
06G	6	200-240 380-440	20 20	2 1	6 (3) *1 6 (3) *1	5V DC, 3mA
1SG	10	200-240 380-440	33 16.5	3 1.5	8 5	5V DC, 3mA

*1 ( ) indicates the current for additional auxiliary contact.

■ Thermal overload relays

Thermal overload relay No. of element	Type	Contactor to be used	Setting current Range (A)		
3	TR-0N/3Z716 TK-0NZ716	SJ-0G SJ-06G SJ-06G/L	0.1 - 0.15 0.13 - 0.2 0.15 - 0.24	0.46 - 0.72 0.64 - 0.96 0.8 - 1.2	2.8 - 4.2 4 - 6 5 - 8
3	TR-5-1N/3 TK-5-1N	SJ-1SG	0.2 - 0.3 0.24 - 0.36 0.3 - 0.45 0.36 - 0.54	0.95 - 1.45 1.4 - 2.2 1.7 - 2.6 2.2 - 3.4	6 - 9 7 - 11 9 - 13* 12 - 18*

Manual reset type is standard. Auto reset type is available on request.
Note: * For SJ-1SWG only.

Discontinued

Downloaded from Arrow.com.

■ Performance data

Basic type	Voltage (V AC)	Operating current (A)	Making and breaking current (A) Making	Breaking	Operating cycles per hour	Life expectancy (operations) Mechanical	Electrical
SJ-0G SJ-06G	220 440	12 6	120 60	96 48	1800	10 millions	1 millions
SJ-1SG	220 440	18 9	180 90	144 72	1800	10 millions	2 millions

■ Operating coil

Type	Voltage (V DC)	Power consumption (W)	Wiring
SJ-0G	12	1.4	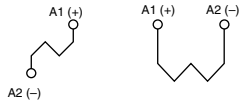
SJ-06G		1.4	
SJ-1SG	24	2.4	

Note: Operating voltage range
SJ-0G, 06G: 85-120% of rated voltage
SJ-1SG: 85-110% of rated voltage

■ Dimensions, mm
Magnetic contactor, open type

SJ-0G

Mass: 0.17kg

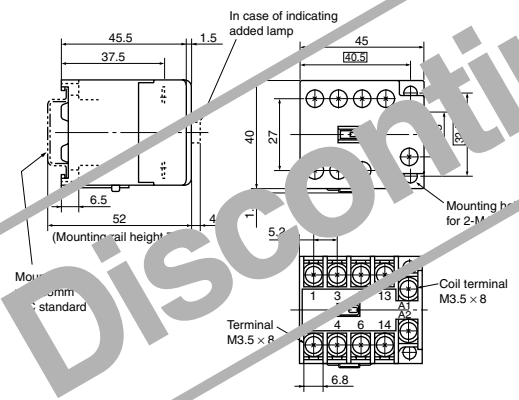

SJ-06G

Mass: 0.19kg

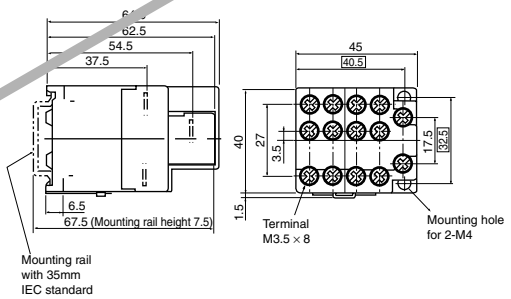

SJ-1SG

Mass: 0.5kg

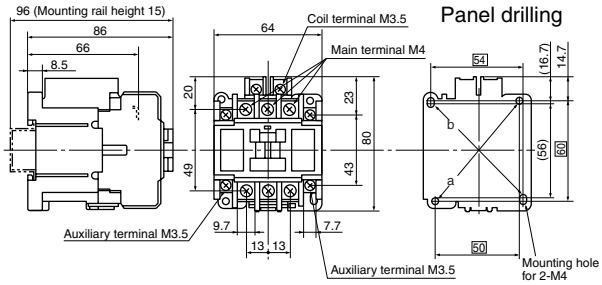

■ Wiring diagrams

SJ-0G

(1 contact)

1NO

1NC

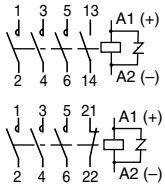

SJ-06G

3NO

2NO1NC

1NO2NC

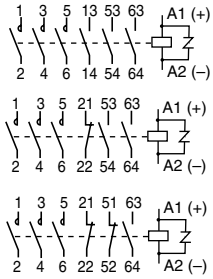

SJ-1SG

2NO

1NO1NC

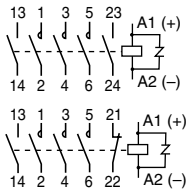

Note: • Use the two mounting holes on a diagonal line to mount a contactor.
Mounting holes indicated by a are compatible with those of SRC type.
Mounting holes indicated by b are compatible with IEC standard.

Discontinued

Downloaded from Arrow.com.

■ Dimensions, mm
Magnetic starter, open type

SJ-0WG/N3H, SJ-0WG/2E

Mass: 0.3kg

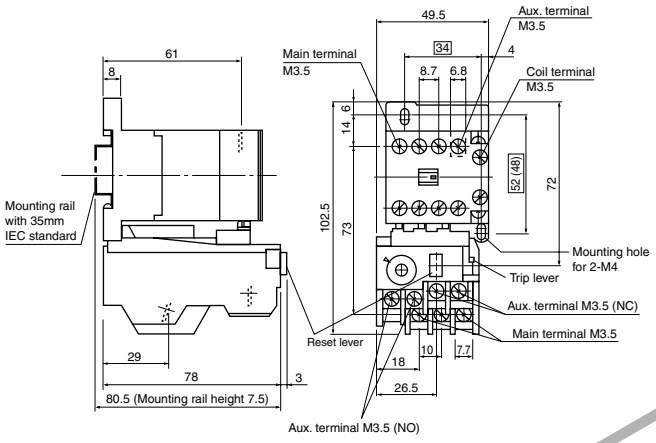

■ Wiring diagrams

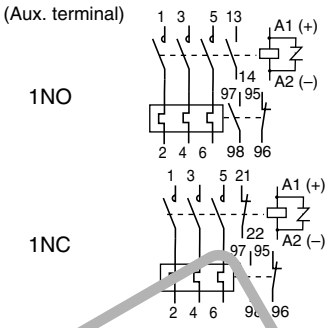

SJ-06WG/N3H, SJ-06WG/2E, SJ-06WG/N3HL, SJ-06WG/2EL

Mass: 0.32kg

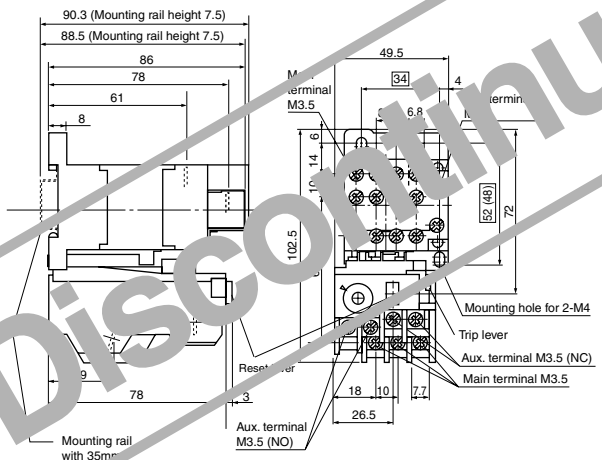

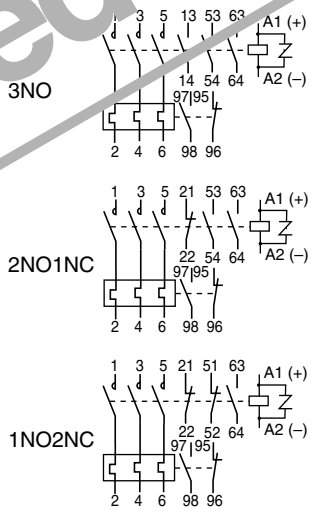

SJ-1SWG/3H, SJ-1SWG/2E

Mass: 0.62kg

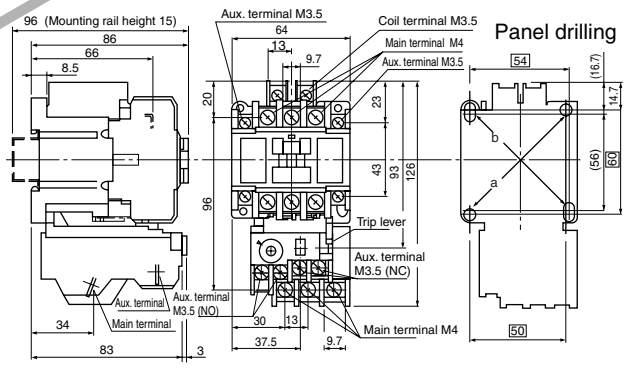

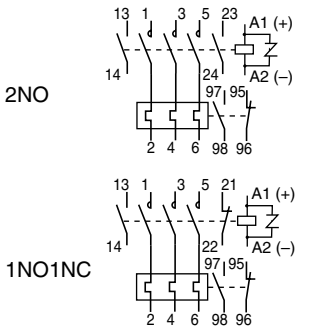

Note: • Use the two mounting holes on a diagonal line to mount a contactor.
Mounting holes indicated by a are compatible with those of SRC type.
Mounting holes indicated by b are compatible with IEC standard.

Discontinued

Downloaded from Arrow.com.

Catalog Disclaimer
The information contained in this catalog does not constitute an express or implied warranty of quality, any warranty of merchantability of fitness for a particular purpose is hereby disclaimed.

Since the user's product information, specific use application, and conditions of use are all outside of Fuji Electric FA Components & Systems'control, **it shall be the responsibility of the user to determine the suitability of any of the products mentioned for the user's application.**

One Year Limited Warranty
The products identified in this catalog shall be sold pursuant to the terms and conditions identified in the "Conditions of Sale" issued by Fuji Electric FA with each order confirmation.

Except to the extent otherwise provided for in the Conditions of Sale issued by Fuji Electric FA, Fuji Electric FA warrants that the Fuji Electric FA products identified in this catalog shall be free from significant defects in materials and workmanship provided the product has not been: 1) repaired or altered by others than Fuji Electric FA; 2) subjected to negligence, accident, misuse, or damage by circumstances beyond Fuji Electric FA's control; 3) improperly operated, maintained or stored; or 4) used in other than normal use or service. This warranty shall apply only to defects appearing within one (1) year from the date of shipment by Fuji Electric FA, and in such case, only if such defects are reported to Fuji Electric FA within thirty (30) days of discovery by purchaser. Such notice should be submitted in writing to Fuji Electric FA at 5-7, Nihonbashi Odemma-cho, Chuo-ku, Tokyo, Japan. The sole and exclusive remedy with respected to the above warranty whether such claim is based on warranty, contract, negligence, strict liability or any other theory, is limited to the repair or replacement of such product or, at Fuji Electric FA's option reimbursement by Fuji Electric FA of the purchase price paid to Fuji Electric FA for the particular product. **Fuji Electric FA does not make any other representations or warranties, whether oral or in writing, expressed or implied, including but not limited to any warranty regarding merchantability or fitness for a particular purpose.** Except as provided in the Conditions of Sale, no agent or representative of Fuji Electric FA is authorized to modify the terms of this warranty in writing or orally.

In no event shall Fuji Electric FA be liable for special, indirect or consequential damages, including but not limited to, loss of use of the product, other equipment, plant and power system which is installed with the product, loss of profits or revenues, cost of capital, or claims against the purchaser or user of the product by its customers resulting from the use of information, recommendations and descriptions contained herein. The purchaser agrees to pass on to its customers and users, in writing at the time inquiries and orders are received by buyer, Fuji Electric FA's warranty as set forth above.

⚠ Caution "Safety precautions"
- Operate (keep) in the environment specified in the operating instructions and manual. High temperature, high humidity, condensation, dust, corrosive gases, oil, organic solvents, excessive vibration or shock might cause electric shock, fire, erratic operation or failure.
- Follow the regulations of industrial wastes when the product is to be discarded.
- The products covered in this catalogs have not been designed or manufactured for use in equipment or systems which, in the event of failure, can lead to loss of human life.
- If you intend to use the products covered in this catalog for special applications, such as for nuclear energy control, aerospace, medical, or transportation, please consult tour Fuji Electric FA agent.
- Be sure to provide protective measures when using the product covered in these catalogs in equipment which, in the event of failure, may lead to loss of human life or other grave results.
- Follow the directions of the operating instructions when mounting the product.

Downloaded from Arrow.com.

D&C CATALOG DIGEST INDEX

Individual catalog No.	LOW VOLTAGE PRODUCTS Up to 600 Volts
01	Magnetic Contactors and Starters Thermal Overload Relays, Solid-state Contactors
02	Manual Motor Starters and Contactors Combination Starters
03	Industrial Relays, Industrial Control Relays Annunciator Relay Unit, Time Delay Relays
04	Pushbuttons, Selector Switches, Pilot Lights Rotary Switches, Cam Type Selector Switches Panel Switches, Terminal Blocks, Testing Terminals
05	Limit Switches, Proximity Switches Photoelectric Switches
06	Molded Case Circuit Breakers Air Circuit Breakers
07	Earth Leakage Circuit Breakers Earth Leakage Protective Relays
08	Circuit Protectors Low Voltage Current-Limiting Fuses
09	Measuring Instruments, Arresters, Transducers Power Factor Controllers Power Monitoring Equipment (F-MPC)
10	AC Power Regulators Noise Suppression Filters Control Power Transformers
	HIGH VOLTAGE PRODUCTS Up to 36kV
11	Disconnecting Switches, Power Fuses Air Load Break Switches Instrument Transformers — VT, CT
12	Vacuum Circuit Breakers, Vacuum Magnetic Contactors Protective Relays

INDIVIDUAL CATALOG 01

from D&C CATALOG 20th Edition

Fuji Electric FA Components & Systems Co., Ltd.

5-7, Nihonbashi Odemma-cho, Chuo-ku, Tokyo, 103-0011, Japan

URL http://www.fujielectric.co.jp/fcs/eng

Information in this catalog is subject to change without notice.

2016-10 PDF FOLS DEC2001b

Downloaded from Arrow.com.