Hex D Flip-Flop with Common Clock and Reset

High-Performance Silicon-Gate CMOS

MC74HC174A

The MC74HC174A is identical in pinout to the LS174. The device inputs are compatible with standard CMOS outputs; with pullup resistors, they are compatible with LSTTL outputs.

This device consists of six D flip−flops with common Clock and Reset inputs. Each flip−flop is loaded with a low−to−high transition of the Clock input. Reset is asynchronous and active−low.

Features

- Output Drive Capability: 10 LSTTL Loads
- Outputs Directly Interface to CMOS, NMOS, and TTL
- Operating Voltage Range: 2.0 to 6.0 V
- Low Input Current: 1.0 μA
- In Compliance with the Requirements Defined by JEDEC Standard No. 7 A
- Chip Complexity: 162 FETs or 40.5 Equivalent Gates
- −Q Suffix for Automotive and Other Applications Requiring Unique Site and Control Change Requirements; AEC−Q100 Qualified and PPAP Capable*
- These Devices are Pb−Free, Halogen Free/BFR Free and are RoHS Compliant

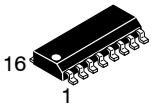

SOIC−16
D SUFFIX
CASE 751B

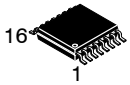

TSSOP−16
DT SUFFIX
CASE 948F

QFN16
MN SUFFIX
CASE 485AW

MARKING DIAGRAMS

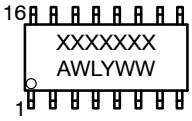

SOIC−16

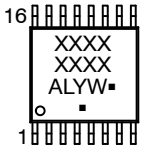

TSSOP−16

QFN16

XXXXXXX = Specific Device Code
A = Assembly Location
WL, L = Wafer Lot
Y = Year
WW, W = Work Week
G or ▪ = Pb−Free Package

(Note: Microdot may be in either location)

PIN ASSIGNMENT

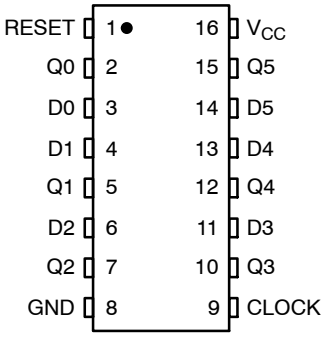

ORDERING INFORMATION

See detailed ordering, marking and shipping information in the package dimensions section on page 7 of this data sheet.

© Semiconductor Components Industries, LLC, 2012

Downloaded from Arrow.com.

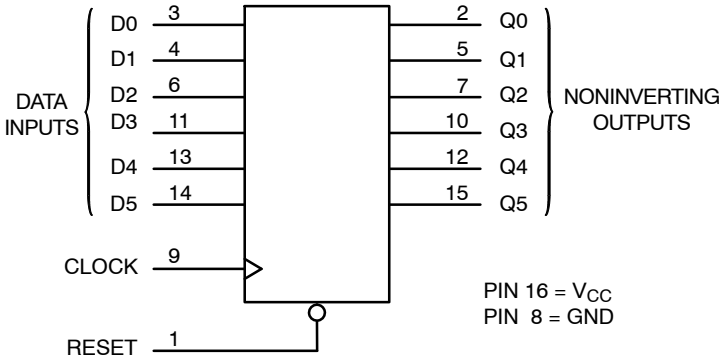

Figure 1. Logic Diagram

FUNCTION TABLE

Inputs			Output
Reset	**Clock**	**D**	**Q**
L	X	X	L
H	↗	H	H
H	↗	L	L
H	L	X	No Change
H	↘	X	No Change

Share Feedback
Your Opinion Matters

Downloaded from Arrow.com.

MAXIMUM RATINGS

Symbol	Parameter		Value	Unit
V_{CC}	DC Supply Voltage		−0.5 to +6.5	V
V_{IN}	DC Input Voltage		−0.5 to V_{CC}+0.5	V
V_{OUT}	DC Output Voltage		−0.5 to V_{CC}+0.5	V
I_{IN}	DC Input Diode Current, per Pin		±20	mA
I_{OUT}	DC Output Diode Current, per Pin		±25	mA
I_{CC}	DC Supply Current, V_{CC} and GND Pins		±50	mA
I_{IK}	Input Clamp Current (V_{IN} < 0 or V_{IN} > V_{CC})		±20	mA
I_{OK}	Output Clamp Current (V_{OUT} < 0 or V_{OUT} > V_{CC})		±20	mA
T_{STG}	Storage Temperature Range		−65 to +150	°C
T_L	Lead Temperature, 1 mm from Case for 10 Seconds		260	°C
T_J	Junction Temperature Under Bias		+150	°C
θ_{JA}	Thermal Resistance (Note 1)	SOIC−16 QFN16 TSSOP−16	126 118 159	°C/W
P_D	Power Dissipation in Still Air at 25°C	SOIC−16 QFN16 TSSOP−16	995 1062 787	mW
MSL	Moisture Sensitivity		Level 1	–
F_R	Flammability Rating	Oxygen Index: 28 to 34	UL 94 V−0 @ 0.125 in.	–
V_{ESD}	ESD Withstand Voltage (Note 2)	Human Body Model Charged Device Model	2000 N/A	V
$I_{LATCHUP}$	Latchup Performance (Note 3)		±100	mA

Stresses exceeding those listed in the Maximum Ratings table may damage the device. If any of these limits are exceeded, device functionality should not be assumed, damage may occur and reliability may be affected.

1. Measured with minimum pad spacing on an FR4 board, using 76mm−by−114mm, 2−ounce copper trace no air flow per JESD51−7.
2. HBM tested to EIA / JESD22−A114−A. CDM tested to JESD22−C101−A. JEDEC recommends that ESD qualification to EIA/JESD22−A115A (Machine Model) be discontinued.
3. Tested to EIA/JESD78 Class II.

RECOMMENDED OPERATING CONDITIONS

Symbol	Parameter		Min	Max	Unit
V_{CC}	DC Supply Voltage		2.0	6.0	V
V_{IN}, V_{OUT}	DC Input Voltage, Output Voltage (Note 4)		0	V_{CC}	V
T_A	Operating Temperature, All Package Types		−55	+125	°C
t_r, t_f	CLOCK Input Rise and Fall Time (Figure 3)	V_{CC} = 2.0 V V_{CC} = 3.3 V V_{CC} = 4.5 V V_{CC} = 6.0 V	0 0 0 0	1000 700 500 400	ns

Functional operation above the stresses listed in the Recommended Operating Ranges is not implied. Extended exposure to stresses beyond the Recommended Operating Ranges limits may affect device reliability.

4. Unused inputs may not be left open. All inputs must be tied to a high− or low−logic input voltage level.

Share Feedback
Your Opinion Matters

Downloaded from Arrow.com.

DC ELECTRICAL CHARACTERISTICS

Symbol	Parameter	Test Conditions	V_{CC} V	Guaranteed Limit –55°C to 25°C	≤85°C	≤125°C	Unit
V_{IH}	Minimum High–Level Input Voltage	V_{OUT} = 0.1 V or V_{CC} – 0.1 V $\|I_{OUT}\|$ ≤ 20 μA	2.0 4.5 6.0	1.5 3.15 4.2	1.5 3.15 4.2	1.5 3.15 4.2	V
V_{IL}	Maximum Low–Level Input Voltage	V_{OUT} = 0.1 V or V_{CC} – 0.1 V $\|I_{OUT}\|$ ≤ 20 μA	2.0 4.5 6.0	0.5 1.35 1.8	0.5 1.35 1.8	0.5 1.35 1.8	V
V_{OH}	Minimum High–Level Output Voltage	V_{IN} = V_{IH} or V_{IL} $\|I_{OUT}\|$ ≤ 20 μA	2.0 4.5 6.0	1.9 4.4 5.9	1.9 4.4 5.9	1.9 4.4 5.9	V
		V_{IN} = V_{IH} or V_{IL} $\|I_{OUT}\|$ ≤ 4.0 mA $\|I_{OUT}\|$ ≤ 5.2 mA	4.5 6.0	3.98 5.48	3.84 5.34	3.7 5.2	
V_{OL}	Maximum Low–Level Output Voltage	V_{IN} = V_{IH} or V_{IL} $\|I_{OUT}\|$ ≤ 20 μA	2.0 4.5 6.0	0.1 0.1 0.1	0.1 0.1 0.1	0.1 0.1 0.1	V
		V_{IN} = V_{IH} or V_{IL} $\|I_{OUT}\|$ ≤ 4.0 mA $\|I_{OUT}\|$ ≤ 5.2 mA	4.5 6.0	0.26 0.26	0.33 0.33	0.4 0.4	
I_{IN}	Maximum Input Leakage Current	V_{IN} = V_{CC} or GND	6.0	±0.1	±1.0	±1.0	μA
I_{CC}	Maximum Quiescent Supply Current (per Package)	V_{IN} = V_{CC} or GND I_{OUT} = 0 μA	6.0	4.0	40	160	μA

Product parametric performance is indicated in the Electrical Characteristics for the listed test conditions, unless otherwise noted. Product performance may not be indicated by the Electrical Characteristics if operated under different conditions.

AC ELECTRICAL CHARACTERISTICS

Symbol	Parameter	V_{CC} V	Guaranteed Limit –55°C to 25°C	≤85°C	≤125°C	Unit
f_{max}	Maximum Clock Frequency (50% Duty Cycle) (Figures 2, 5)	2.0 4.5 6.0	6.0 30 35	4.8 24 28	4.0 20 24	MHz
t_{PLH} t_{PHL}	Maximum Propagation Delay, Clock to Q (Figures 3, 5)	2.0 4.5 6.0	110 22 19	140 28 24	165 33 28	ns
t_{PLH} t_{PHL}	Maximum Propagation Delay, Reset to Q (Figures 2, 5)	2.0 4.5 6.0	110 21 19	140 28 24	160 32 27	ns
t_{TLH} t_{THL}	Maximum Output Transition Time, Any Output (Figures 2, 5)	2.0 4.5 6.0	75 15 13	95 19 16	110 22 19	ns
C_{in}	Maximum Input Capacitance		10	10	10	pF

		Typical @ 25°C, V_{CC} = 5.0 V	
C_{PD}	Power Dissipation Capacitance, per Enabled Output (Note 5)	62	pF

5. Used to determine the no–load dynamic power consumption: $P_D = C_{PD} V_{CC}^2 f + I_{CC} V_{CC}$.

Share Feedback
Your Opinion Matters

Downloaded from Arrow.com.

TIMING REQUIREMENTS

Symbol	Parameter	Figure	V_{CC} V	Guaranteed Limit –55°C to 25°C Min	Guaranteed Limit –55°C to 25°C Max	Guaranteed Limit ≤85°C Min	Guaranteed Limit ≤85°C Max	Guaranteed Limit ≤125°C Min	Guaranteed Limit ≤125°C Max	Unit
t_{su}	Minimum Setup Time, Data to Clock	5	2.0 4.5 6.0	50 10 9.0		65 13 11		75 15 13		ns
t_h	Minimum Hold Time, Clock to Data	5	2.0 4.5 6.0	5.0 5.0 5.0		5.0 5.0 5.0		5.0 5.0 5.0		ns
t_{rec}	Minimum Recovery Time, Reset Inactive to Clock	4	2.0 4.5 6.0	5.0 5.0 5.0		5.0 5.0 5.0		5.0 5.0 5.0		ns
t_w	Minimum Pulse Width, Clock	3	2.0 4.5 6.0	75 15 13		95 19 16		110 22 19		ns
t_w	Minimum Pulse Width, Reset	4	2.0 4.5 6.0	75 15 13		95 19 16		110 22 19		ns
t_r, t_f	Maximum Input Rise and Fall Times	3	2.0 4.5 6.0		1000 500 400		1000 500 400		1000 500 400	ns

Share Feedback
Your Opinion Matters

Downloaded from Arrow.com.

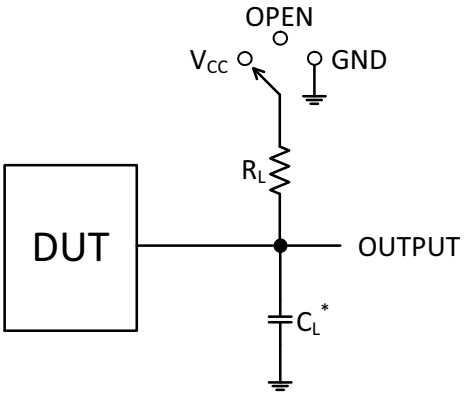

*C_L Includes probe and jig capacitance

Test	Switch Position	C_L	R_L
t_{PLH} / t_{PHL}	Open	50 pF	1 kΩ
t_{PLZ} / t_{PZL}	V_{CC}		
t_{PHZ} / t_{PZH}	GND		

Figure 2. Test Circuit

SWITCHING WAVEFORMS

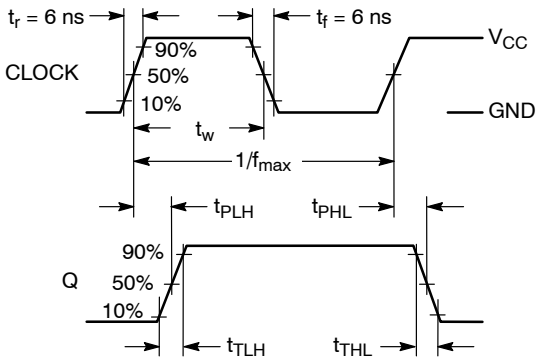

Figure 3. Switching Waveform

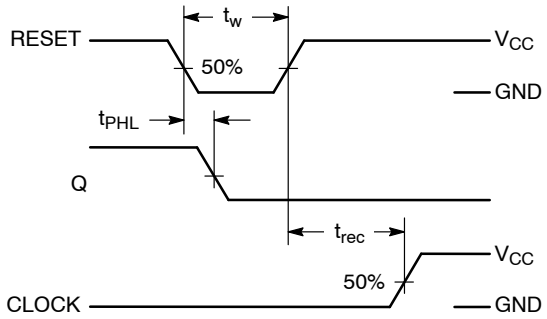

Figure 4. Switching Waveform

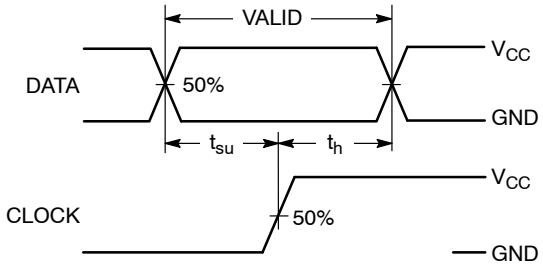

Figure 5. Switching Waveform

Share Feedback
Your Opinion Matters

Downloaded from Arrow.com.

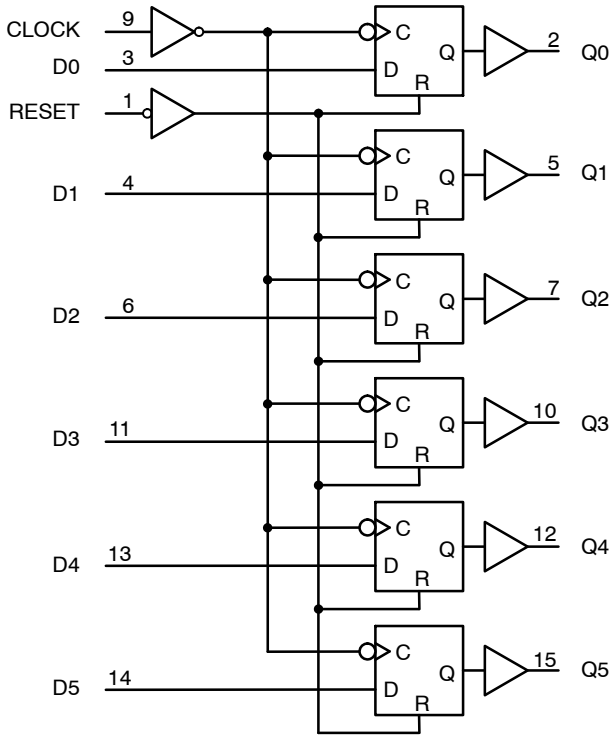

Figure 6. Expanded Logic Diagram

ORDERING INFORMATION

Device	Marking	Package	Shipping†
MC74HC174ADR2G	HC174AG	SOIC−16	2500 Units / Tape & Reel
MC74HC174ADR2G−Q*	HC174AG	SOIC−16	2500 Units / Tape & Reel
MC74HC174ADTR2G	HC 174A	TSSOP−16	2500 Units / Tape & Reel
MC74HC174ADTR2G−Q*	HC 174A	TSSOP−16	2500 Units / Tape & Reel

†For information on tape and reel specifications, including part orientation and tape sizes, please refer to our Tape and Reel Packaging Specifications Brochure, BRD8011/D.

*−Q Suffix for Automotive and Other Applications Requiring Unique Site and Control Change Requirements; AEC−Q100 Qualified and PPAP Capable.

Share Feedback
Your Opinion Matters

Downloaded from Arrow.com.

PACKAGE DIMENSIONS

QFN16, 2.5x3.5, 0.5P
CASE 485AW
ISSUE O

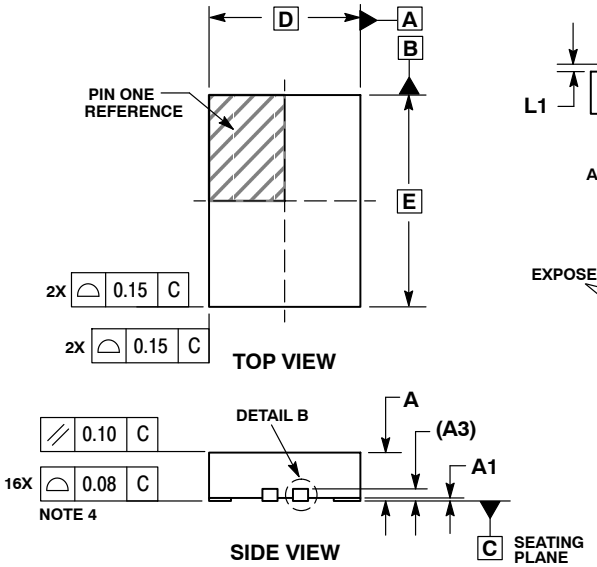

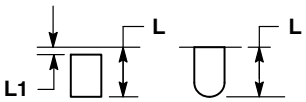

DETAIL A
ALTERNATE TERMINAL CONSTRUCTIONS

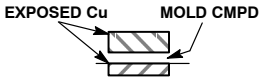

DETAIL B
ALTERNATE CONSTRUCTIONS

NOTES:
1. DIMENSIONING AND TOLERANCING PER ASME Y14.5M, 1994.
2. CONTROLLING DIMENSION: MILLIMETERS.
3. DIMENSIONS b APPLIES TO PLATED TERMINAL AND IS MEASURED BETWEEN 0.15 AND 0.30 MM FROM TERMINAL.
4. COPLANARITY APPLIES TO THE EXPOSED PAD AS WELL AS THE TERMINALS.

	MILLIMETERS	
DIM	MIN	MAX
A	0.80	1.00
A1	0.00	0.05
A3	0.20 REF	
b	0.20	0.30
D	2.50 BSC	
D2	0.85	1.15
E	3.50 BSC	
E2	1.85	2.15
e	0.50 BSC	
K	0.20	---
L	0.35	0.45
L1	---	0.15

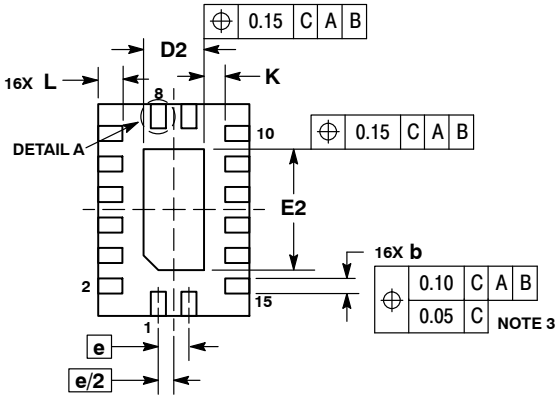

RECOMMENDED SOLDERING FOOTPRINT*

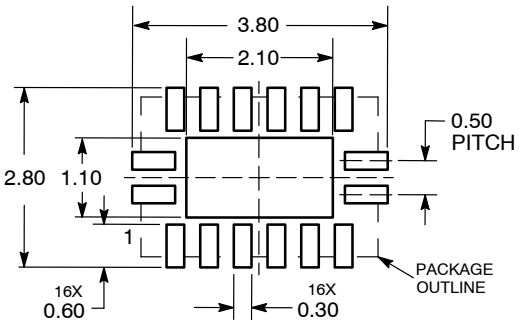

DIMENSIONS: MILLIMETERS

*For additional information on our Pb−Free strategy and soldering details, please download the **onsemi** Soldering and Mounting Techniques Reference Manual, SOLDERRM/D.

Share Feedback
Your Opinion Matters

Downloaded from Arrow.com.

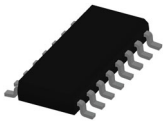

SOIC−16 9.90x3.90x1.37 1.27P
CASE 751B
ISSUE M

DATE 18 OCT 2024

NOTES:
1. DIMENSIONING AND TOLERANCING PER ASME Y14.5M, 2018.
2. DIMENSION IN MILLIMETERS. ANGLE IN DEGREES.
3. DIMENSIONS D AND E1 DO NOT INCLUDE MOLD PROTRUSION.
4. MAXIMUM MOLD PROTRUSION 0.15mm PER SIDE.
5. DIMENSION b DOES NOT INCLUDE DAMBAR PROTRUSION. ALLOWABLE DAMBAR PROTRUSION SHALL BE 0.127mm TOTAL IN EXCESS OF THE b DIMENSION AT MAXIMUM MATERIAL CONDITION.

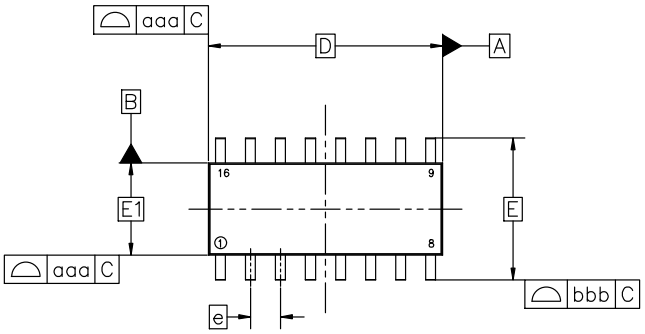

TOP VIEW

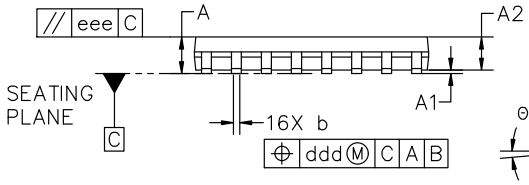

SIDE VIEW

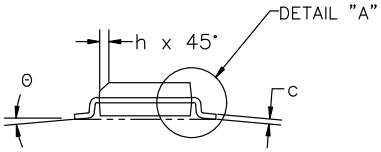

END VIEW

MILLIMETERS			
DIM	MIN	NOM	MAX
A	1.35	1.55	1.75
A1	0.10	0.18	0.25
A2	1.25	1.37	1.50
b	0.35	0.42	0.49
c	0.19	0.22	0.25
D	9.90 BSC		
E	6.00 BSC		
E1	3.90 BSC		
e	1.27 BSC		
h	0.25	---	0.50
L	0.40	0.83	1.25
L1	1.05 REF		
Θ	0°	---	7°
TOLERANCE OF FORM AND POSITION			
aaa	0.10		
bbb	0.20		
ccc	0.10		
ddd	0.25		
eee	0.10		

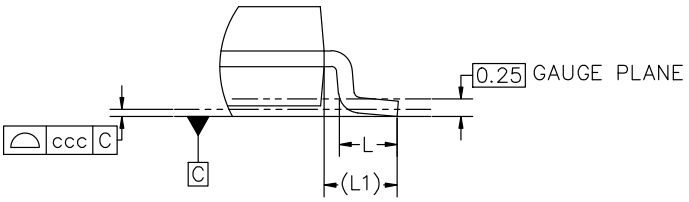

DETAIL "A"
Scale 3:1

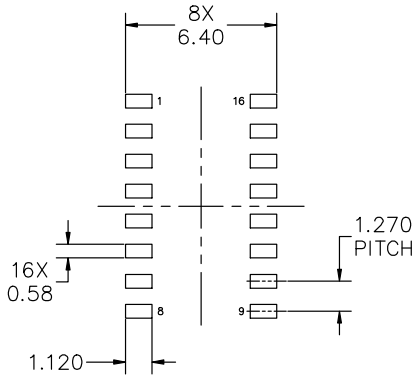

RECOMMENDED MOUNTING FOOTPRINT

*FOR ADDITIONAL INFORMATION ON OUR PB−FREE STRATEGY AND SOLDERING DETAILS, PLEASE DOWNLOAD THE onsemi SOLDERING AND MOUNTING TECHNIQUES REFERENCE MANUAL, SOLDERRM/D

DOCUMENT NUMBER:	**98ASB42566B**	Electronic versions are uncontrolled except when accessed directly from the Document Repository. Printed versions are uncontrolled except when stamped "CONTROLLED COPY" in red.
DESCRIPTION:	**SOIC−16 9.90X3.90X1.37 1.27P**	**PAGE 1 OF 2**

onsemi and onsemi are trademarks of Semiconductor Components Industries, LLC dba **onsemi** or its subsidiaries in the United States and/or other countries. **onsemi** reserves the right to make changes without further notice to any products herein. **onsemi** makes no warranty, representation or guarantee regarding the suitability of its products for any particular purpose, nor does **onsemi** assume any liability arising out of the application or use of any product or circuit, and specifically disclaims any and all liability, including without limitation special, consequential or incidental damages. **onsemi** does not convey any license under its patent rights nor the rights of others.

Downloaded from Arrow.com.

SOIC−16 9.90x3.90x1.37 1.27P
CASE 751B
ISSUE M

DATE 18 OCT 2024

GENERIC MARKING DIAGRAM*

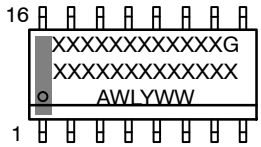

XXXXX = Specific Device Code
A = Assembly Location
WL = Wafer Lot
Y = Year
WW = Work Week
G = Pb−Free Package

*This information is generic. Please refer to device data sheet for actual part marking. Pb−Free indicator, “G” or microdot “▪”, may or may not be present. Some products may not follow the Generic Marking.

STYLE 1:
PIN 1. COLLECTOR
2. BASE
3. EMITTER
4. NO CONNECTION
5. EMITTER
6. BASE
7. COLLECTOR
8. COLLECTOR
9. BASE
10. EMITTER
11. NO CONNECTION
12. EMITTER
13. BASE
14. COLLECTOR
15. EMITTER
16. COLLECTOR

STYLE 2:
PIN 1. CATHODE
2. ANODE
3. NO CONNECTION
4. CATHODE
5. CATHODE
6. NO CONNECTION
7. ANODE
8. CATHODE
9. CATHODE
10. ANODE
11. NO CONNECTION
12. CATHODE
13. CATHODE
14. NO CONNECTION
15. ANODE
16. CATHODE

STYLE 3:
PIN 1. COLLECTOR, DYE #1
2. BASE, #1
3. EMITTER, #1
4. COLLECTOR, #1
5. COLLECTOR, #2
6. BASE, #2
7. EMITTER, #2
8. COLLECTOR, #2
9. COLLECTOR, #3
10. BASE, #3
11. EMITTER, #3
12. COLLECTOR, #3
13. COLLECTOR, #4
14. BASE, #4
15. EMITTER, #4
16. COLLECTOR, #4

STYLE 4:
PIN 1. COLLECTOR, DYE #1
2. COLLECTOR, #1
3. COLLECTOR, #2
4. COLLECTOR, #2
5. COLLECTOR, #3
6. COLLECTOR, #3
7. COLLECTOR, #4
8. COLLECTOR, #4
9. BASE, #4
10. EMITTER, #4
11. BASE, #3
12. EMITTER, #3
13. BASE, #2
14. EMITTER, #2
15. BASE, #1
16. EMITTER, #1

STYLE 5:
PIN 1. DRAIN, DYE #1
2. DRAIN, #1
3. DRAIN, #2
4. DRAIN, #2
5. DRAIN, #3
6. DRAIN, #3
7. DRAIN, #4
8. DRAIN, #4
9. GATE, #4
10. SOURCE, #4
11. GATE, #3
12. SOURCE, #3
13. GATE, #2
14. SOURCE, #2
15. GATE, #1
16. SOURCE, #1

STYLE 6:
PIN 1. CATHODE
2. CATHODE
3. CATHODE
4. CATHODE
5. CATHODE
6. CATHODE
7. CATHODE
8. CATHODE
9. ANODE
10. ANODE
11. ANODE
12. ANODE
13. ANODE
14. ANODE
15. ANODE
16. ANODE

STYLE 7:
PIN 1. SOURCE N-CH
2. COMMON DRAIN (OUTPUT)
3. COMMON DRAIN (OUTPUT)
4. GATE P-CH
5. COMMON DRAIN (OUTPUT)
6. COMMON DRAIN (OUTPUT)
7. COMMON DRAIN (OUTPUT)
8. SOURCE P-CH
9. SOURCE P-CH
10. COMMON DRAIN (OUTPUT)
11. COMMON DRAIN (OUTPUT)
12. COMMON DRAIN (OUTPUT)
13. GATE N-CH
14. COMMON DRAIN (OUTPUT)
15. COMMON DRAIN (OUTPUT)
16. SOURCE N-CH

DOCUMENT NUMBER:	**98ASB42566B**	Electronic versions are uncontrolled except when accessed directly from the Document Repository. Printed versions are uncontrolled except when stamped “CONTROLLED COPY” in red.
DESCRIPTION:	**SOIC−16 9.90X3.90X1.37 1.27P**	**PAGE 2 OF 2**

onsemi and onsemi are trademarks of Semiconductor Components Industries, LLC dba **onsemi** or its subsidiaries in the United States and/or other countries. **onsemi** reserves the right to make changes without further notice to any products herein. **onsemi** makes no warranty, representation or guarantee regarding the suitability of its products for any particular purpose, nor does **onsemi** assume any liability arising out of the application or use of any product or circuit, and specifically disclaims any and all liability, including without limitation special, consequential or incidental damages. **onsemi** does not convey any license under its patent rights nor the rights of others.

© Semiconductor Components Industries, LLC, 2019

Downloaded from Arrow.com.

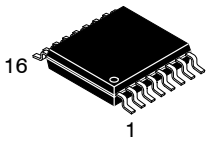

SCALE 2:1

TSSOP−16 WB
CASE 948F
ISSUE B

DATE 19 OCT 2006

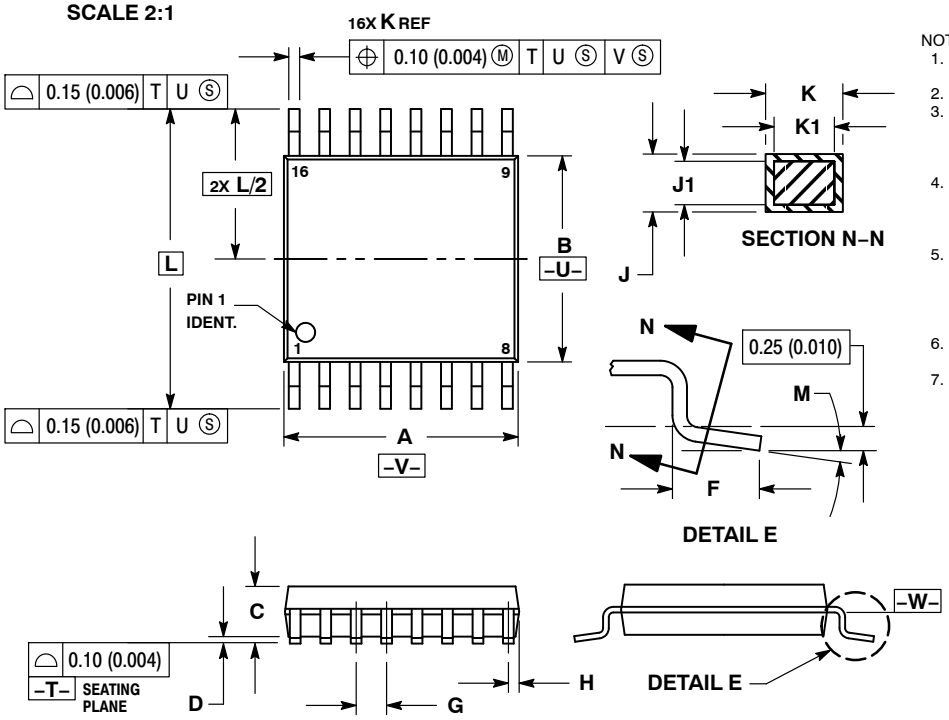

NOTES:
1. DIMENSIONING AND TOLERANCING PER ANSI Y14.5M, 1982.
2. CONTROLLING DIMENSION: MILLIMETER.
3. DIMENSION A DOES NOT INCLUDE MOLD FLASH. PROTRUSIONS OR GATE BURRS. MOLD FLASH OR GATE BURRS SHALL NOT EXCEED 0.15 (0.006) PER SIDE.
4. DIMENSION B DOES NOT INCLUDE INTERLEAD FLASH OR PROTRUSION. INTERLEAD FLASH OR PROTRUSION SHALL NOT EXCEED 0.25 (0.010) PER SIDE.
5. DIMENSION K DOES NOT INCLUDE DAMBAR PROTRUSION. ALLOWABLE DAMBAR PROTRUSION SHALL BE 0.08 (0.003) TOTAL IN EXCESS OF THE K DIMENSION AT MAXIMUM MATERIAL CONDITION.
6. TERMINAL NUMBERS ARE SHOWN FOR REFERENCE ONLY.
7. DIMENSION A AND B ARE TO BE DETERMINED AT DATUM PLANE −W−.

	MILLIMETERS		INCHES	
DIM	MIN	MAX	MIN	MAX
A	4.90	5.10	0.193	0.200
B	4.30	4.50	0.169	0.177
C	−−−	1.20	−−−	0.047
D	0.05	0.15	0.002	0.006
F	0.50	0.75	0.020	0.030
G	0.65 BSC		0.026 BSC	
H	0.18	0.28	0.007	0.011
J	0.09	0.20	0.004	0.008
J1	0.09	0.16	0.004	0.006
K	0.19	0.30	0.007	0.012
K1	0.19	0.25	0.007	0.010
L	6.40 BSC		0.252 BSC	
M	0 °	8 °	0 °	8 °

RECOMMENDED SOLDERING FOOTPRINT*

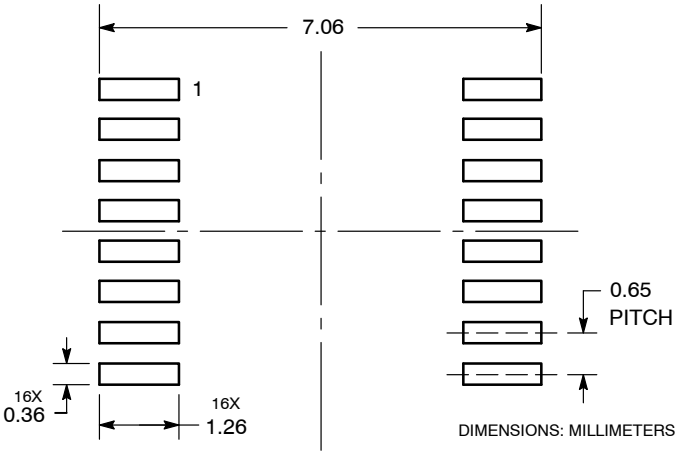

*For additional information on our Pb−Free strategy and soldering details, please download the **onsemi** Soldering and Mounting Techniques Reference Manual, SOLDERRM/D.

GENERIC MARKING DIAGRAM*

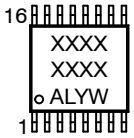

XXXX	= Specific Device Code
A	= Assembly Location
L	= Wafer Lot
Y	= Year
W	= Work Week
G or ▪	= Pb−Free Package

*This information is generic. Please refer to device data sheet for actual part marking. Pb−Free indicator, “G” or microdot “ ▪”, may or may not be present. Some products may not follow the Generic Marking.

DOCUMENT NUMBER:	98ASH70247A	Electronic versions are uncontrolled except when accessed directly from the Document Repository. Printed versions are uncontrolled except when stamped “CONTROLLED COPY” in red.
DESCRIPTION:	TSSOP−16	PAGE 1 OF 1

onsemi and onsemi are trademarks of Semiconductor Components Industries, LLC dba **onsemi** or its subsidiaries in the United States and/or other countries. **onsemi** reserves the right to make changes without further notice to any products herein. **onsemi** makes no warranty, representation or guarantee regarding the suitability of its products for any particular purpose, nor does **onsemi** assume any liability arising out of the application or use of any product or circuit, and specifically disclaims any and all liability, including without limitation special, consequential or incidental damages. **onsemi** does not convey any license under its patent rights nor the rights of others.

Downloaded from Arrow.com.

onsemi, onsemi, and other names, marks, and brands are registered and/or common law trademarks of Semiconductor Components Industries, LLC dba "**onsemi**" or its affiliates and/or subsidiaries in the United States and/or other countries. **onsemi** owns the rights to a number of patents, trademarks, copyrights, trade secrets, and other intellectual property. A listing of **onsemi**'s product/patent coverage may be accessed at www.onsemi.com/site/pdf/Patent−Marking.pdf. **onsemi** reserves the right to make changes at any time to any products or information herein, without notice. The information herein is provided "as−is" and **onsemi** makes no warranty, representation or guarantee regarding the accuracy of the information, product features, availability, functionality, or suitability of its products for any particular purpose, nor does **onsemi** assume any liability arising out of the application or use of any product or circuit, and specifically disclaims any and all liability, including without limitation special, consequential or incidental damages. Buyer is responsible for its products and applications using **onsemi** products, including compliance with all laws, regulations and safety requirements or standards, regardless of any support or applications information provided by **onsemi**. "Typical" parameters which may be provided in **onsemi** data sheets and/or specifications can and do vary in different applications and actual performance may vary over time. All operating parameters, including "Typicals" must be validated for each customer application by customer's technical experts. **onsemi** does not convey any license under any of its intellectual property rights nor the rights of others. **onsemi** products are not designed, intended, or authorized for use as a critical component in life support systems or any FDA Class 3 medical devices or medical devices with a same or similar classification in a foreign jurisdiction or any devices intended for implantation in the human body. Should Buyer purchase or use **onsemi** products for any such unintended or unauthorized application, Buyer shall indemnify and hold **onsemi** and its officers, employees, subsidiaries, affiliates, and distributors harmless against all claims, costs, damages, and expenses, and reasonable attorney fees arising out of, directly or indirectly, any claim of personal injury or death associated with such unintended or unauthorized use, even if such claim alleges that **onsemi** was negligent regarding the design or manufacture of the part. **onsemi** is an Equal Opportunity/Affirmative Action Employer. This literature is subject to all applicable copyright laws and is not for resale in any manner.

ADDITIONAL INFORMATION

TECHNICAL PUBLICATIONS:
Technical Library: www.onsemi.com/design/resources/technical−documentation
onsemi Website: www.onsemi.com

ONLINE SUPPORT: www.onsemi.com/support
For additional information, please contact your local Sales Representative at www.onsemi.com/support/sales

Downloaded from Arrow.com.