USB AM TYPE MALE

P1

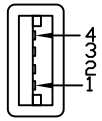

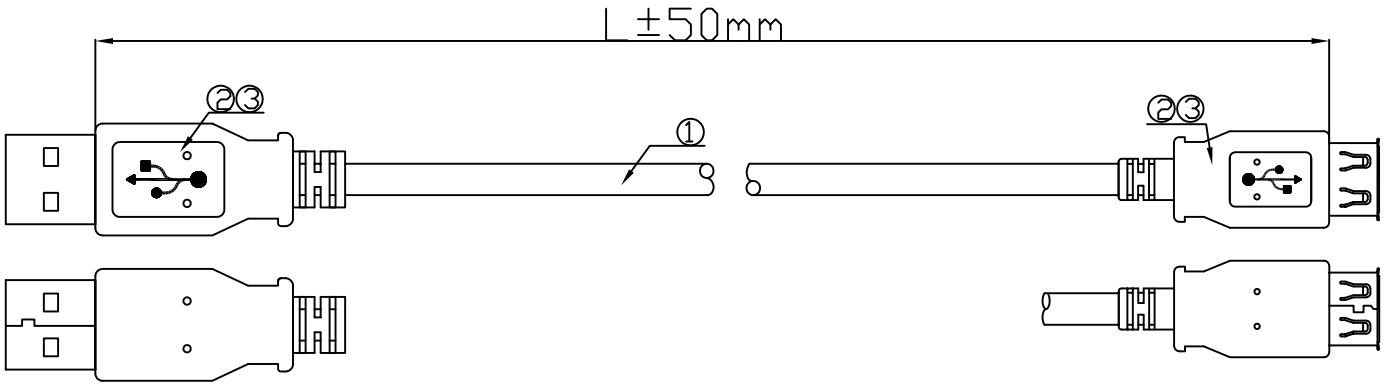

USB BM TYPE MALE

P2

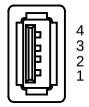

NOTES:

1.CABLE: UL 2725 28AWG*1P+28AWG*2C+D+AL/MY+B+PVC JACKET OD=3.8±0.20mm COLOR BEIGE

CABLE MUST PRINT: EXXXX 凡 AWM STYLE 2725 80°C 30V VW-1

2.CONNECTOR:

P1 : USB A/M, GOLD PLATED CONTACTS, NICKEL PLATED SHELL

P2 : USB A/F,GOLD PLATED CONTACTS, NICKEL PLATED SHELL

3.HOOD: MOLDED TYPE,PVC 45P,COLOR:BEIGE

4.ELECTRICLE TEST:

(1)100% OPEN SHORT & MIS WIRE TEST.

(2)CONTACT RESISTANCE 3 ohm Max .

(3)INSULATION RESISTANCE 10M ohm Min .

(4)HI-POT TEST:DC 300V/10ms

PIN OUT

	P1		P2	
RED	1		1	VCC
WHITE	2		2	-DATA
GREEN	3		3	+DATA
BLACK	4		4	GROUND
SHELL		BRAID&DRAIN		SHELL

ASSMANN WSW P/N	LENGTH
AK-300202-018-E	2.0 M
AK-300202-030-E	3.0 M
AK-300202-050-E	5.0 M

RoHS compliant

Unit:mm

Scale	FREE
TOLERANCE	
X.	±X
X.X	±X
X.XX	±X
DIM	TOL
X.°	±X°
X.X°	±X°
Angle	TOL

Id.	Modification	Date	Name
②	Update drawing	18.06.2014	Joanna
①	Drawn	06.07.2009	Rale

	Date	Name
Drawn	06.07.2009	Rale
Approved	18.06.2014	Joanna

ASSMANN WSW components

Customer-No.

ASSMANN WSW-No.

AK-300202-xxx-E

Drawing-No.

ASS 3640 CA

rev02

Replace

Sheet

Downloaded from Arrow.com.