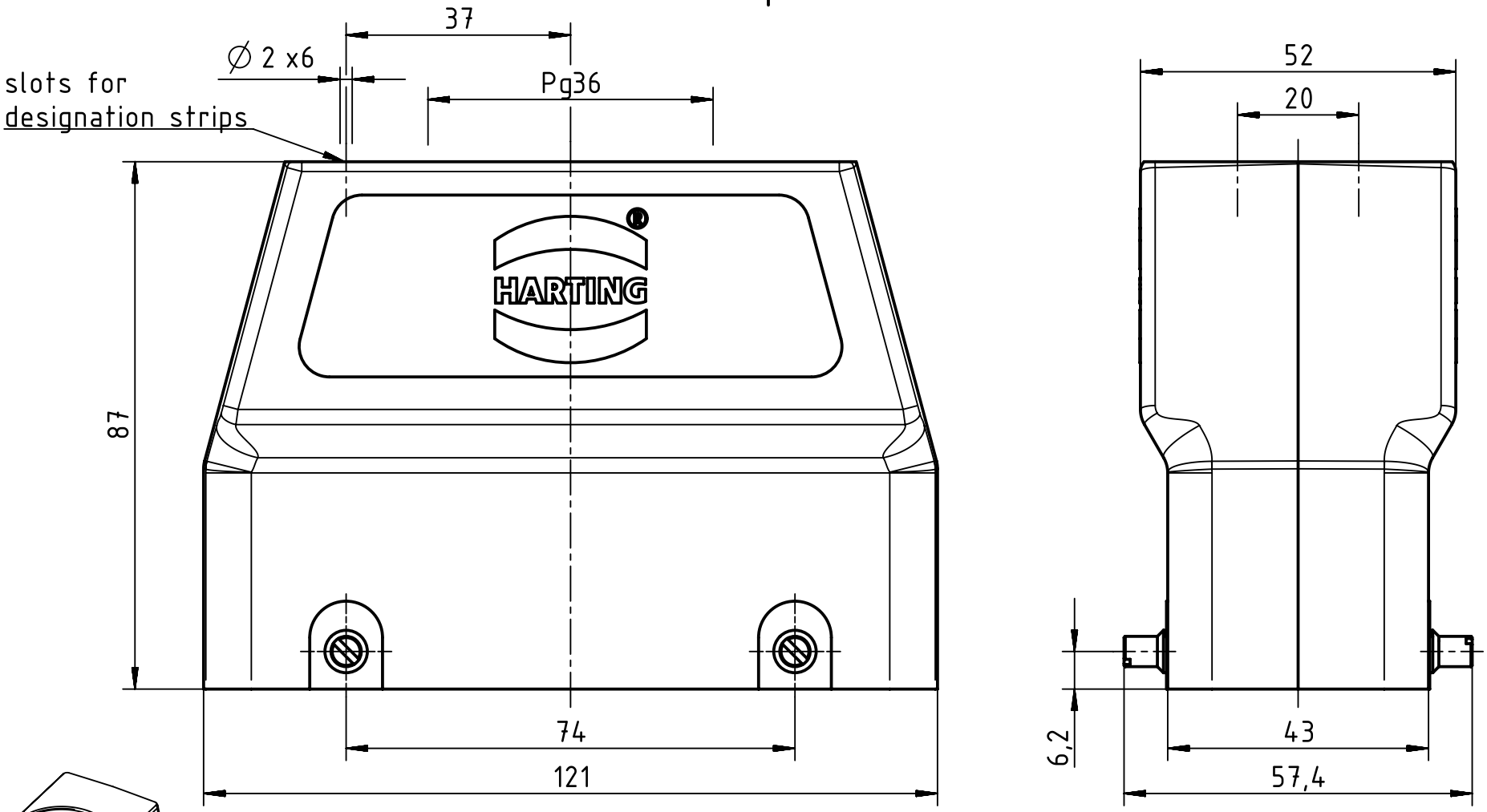

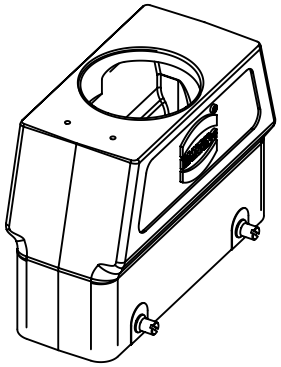

All Dimensions in mm Original Size DIN A4	Scale 1:1	Free size tol.		Ref. Sub.	
All rights reserved Department EL PD - DE	Created by GRUBES	Inspected by TIEMANNA	Standardisation RUETERA	Date 2013-08-05	State Final Release
HARTING Electric GmbH & Co. KG D-32339 Espelkamp	Title Han B Hood Top Entry HC 4 Pegs PG 36				Doc-Key / ECM-Nr. 100517593/UGD/001/C 500000064817
	Type TB	Number 09 30 024 0425		Rev. C	Page 1/1

Downloaded from Arrow.com.

A4