MICRO SWITCH
A DIVISION OF MINNEAPOLIS-HONEYWELL REGULATOR COMPANY
FREEPORT, ILLINOIS
FED. MFR. CODE 91929

PACKET

CATALOG LISTING
IPA1 ★

IPA1

M

DRAWING NUMBER

X 2

ISSUE

RELEASE NO. C.O. 8520

REPLACES

REVISIONS

A	C047659
D J W 10 DEC 80	

K. A. F.	2 NOV. 56	DRAWN
G. C. H.	6 NOV. 56	CHECK
C. N. T.	5 NOV. 56	CHECK
		CHECK

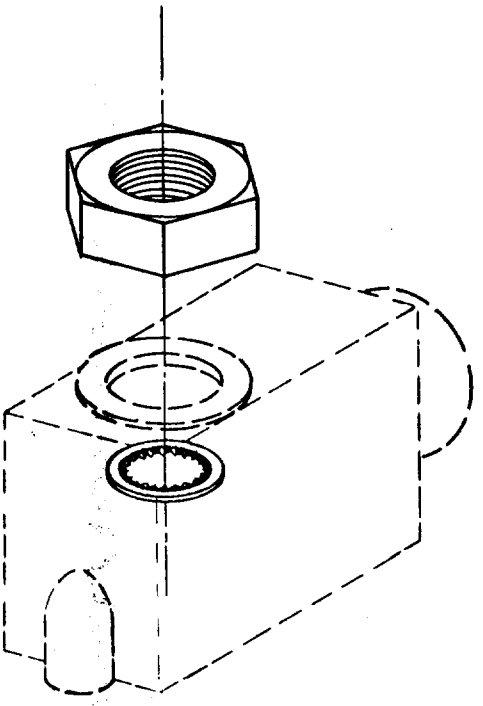

NOTE -
1-PARTS FURNISHED UNASSEMBLED IN BULK AS A PACKET.

THIS DRAWING COVERS A PROPRIETARY ITEM AND IS THE PROPERTY OF MICRO SWITCH, A DIVISION OF HONEYWELL. THIS DRAWING IS NOT TO BE COPIED OR USED WITHOUT THE APPROVAL OF MICRO SWITCH.

CHARACTERISTICS	ELECTRICAL DATA	
	CONTACT ARRANGEMENT	BREAK DISTANCE

SCALE
DO NOT SCALE PRINT

UNLESS OTHERWISE SPECIFIED
DIMENSIONS ARE IN INCHES
TOLERANCES ARE:

ONE PLACE	(.0)	±.030
TWO PLACE	(.00)	±.015
THREE PLACE	(.000)	±.005
ANGLES		±

WEIGHT

Downloaded from Arrow.com.