Alle Rechte vorbehalten/ *All rights reserved*

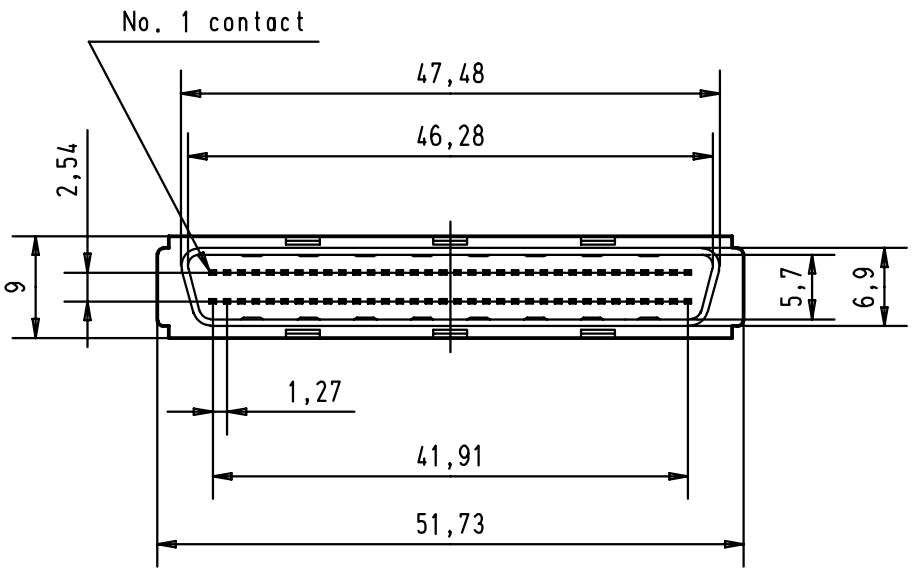

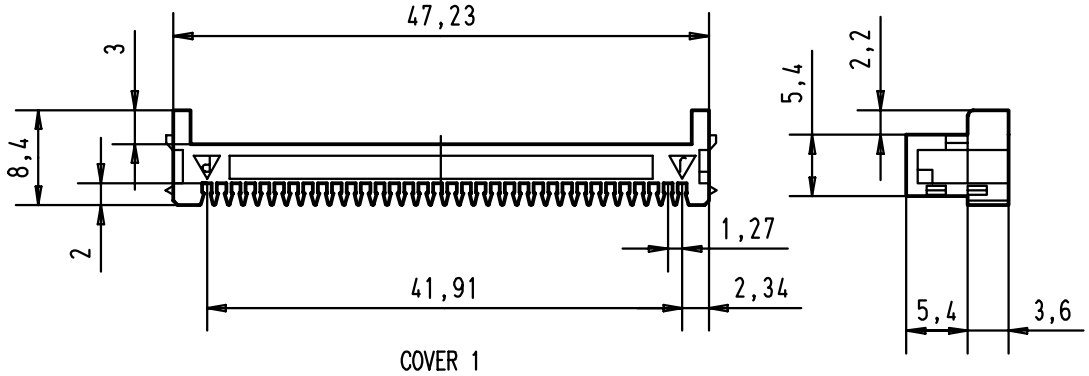

COVER 1

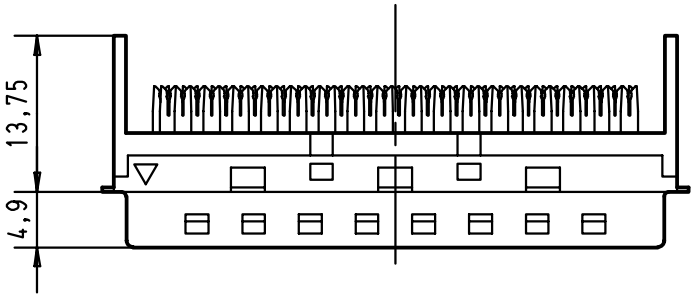

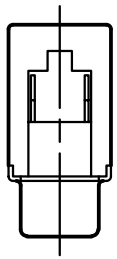

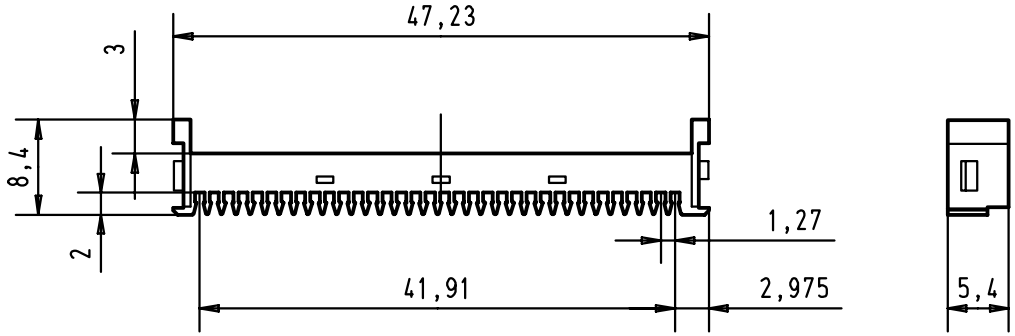

COVER 2

60 03 068 5220	0,80 to 0,88					Dat.	Name	*har.mik®* I/O pin/socket	Maßstab/ *Scale*
60 03 068 5210	0,65 to 0,80				Detail.	30-AUG-00	Alspace	IDC male 68 poles connector	1,5:1
60 03 068 5200	0,50 to 0,65				Insp.			All Dim. in mm Orig. Size DIN A 4	
					Stand.				
Part-No.	*cable insulator ø*	27941	30-AUG-00	Alspace	HARTING EURL F-95972 Paris			TB 60 03 068 52X0	Blatt/ *Page* 1/1
		Mod.	Dat.	Name				Sub.	

Downloaded from Arrow.com.