DATA SHEET

RELEASE Ø DATA SHEET

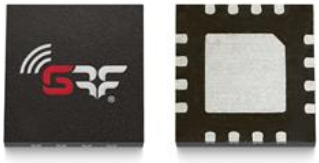

GRF5604

HIGH EFFICIENCY 6-Watt POWER AMPLIFIER 100 to 600 MHz

FEATURES

- Excellent OP1dB/P_{SAT}
- 190 mA Native Mode Quiescent Current Consumption
- 5 V Supply Voltage
- 50 Ω Single-ended Input and Output Impedances
- Digital Shutdown
- -40 to 85 °C Operating Temperature Range
- Compact 3 x 3 mm QFN-16 Package
- Process: InGaP HBT

Reference: 5 V / 247 mA I_{CCQ} / 460 MHz

- Gain: 37.5 dB
- OP1dB: 38 dBm
- Evaluation Board Noise Figure: 3.5 dB

APPLICATIONS

- Automatic Meter Reader
- VHF/UHF
- IoT

DESCRIPTION

The GRF5604 is a high efficiency PA that delivers up to 6 watts P_{SAT} with V_{CC} at 5 volts and 3 watts P_{SAT} with V_{CC} at 3.6 volts. PAE at P_{SAT} is approximately 60%. The device can be externally matched over a range of frequencies from 100 to 600 MHz with typical fractional bandwidths of 5-10%.

Please consult with the GRF applications engineering team for custom tuning/evaluation board data.

Additional tunes can be found on the GRF5604 "Custom Tunes" product page: GRF5604 Custom Tunes

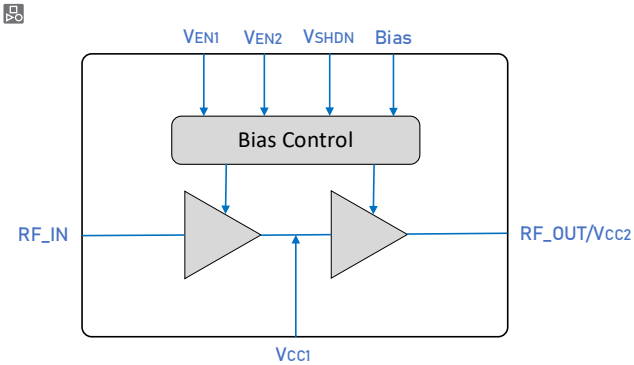

BLOCK DIAGRAM

Guerrilla RF Proprietary Information. • ©2026 Guerrilla RF, Inc. • All rights reserved. • February 23, 2026
www.guerrilla-rf.com • (336) 510-7840 • sales@guerrilla-rf.com • 2000 Pisgah Church Road. Greensboro, NC 27455

Downloaded from Arrow.com.

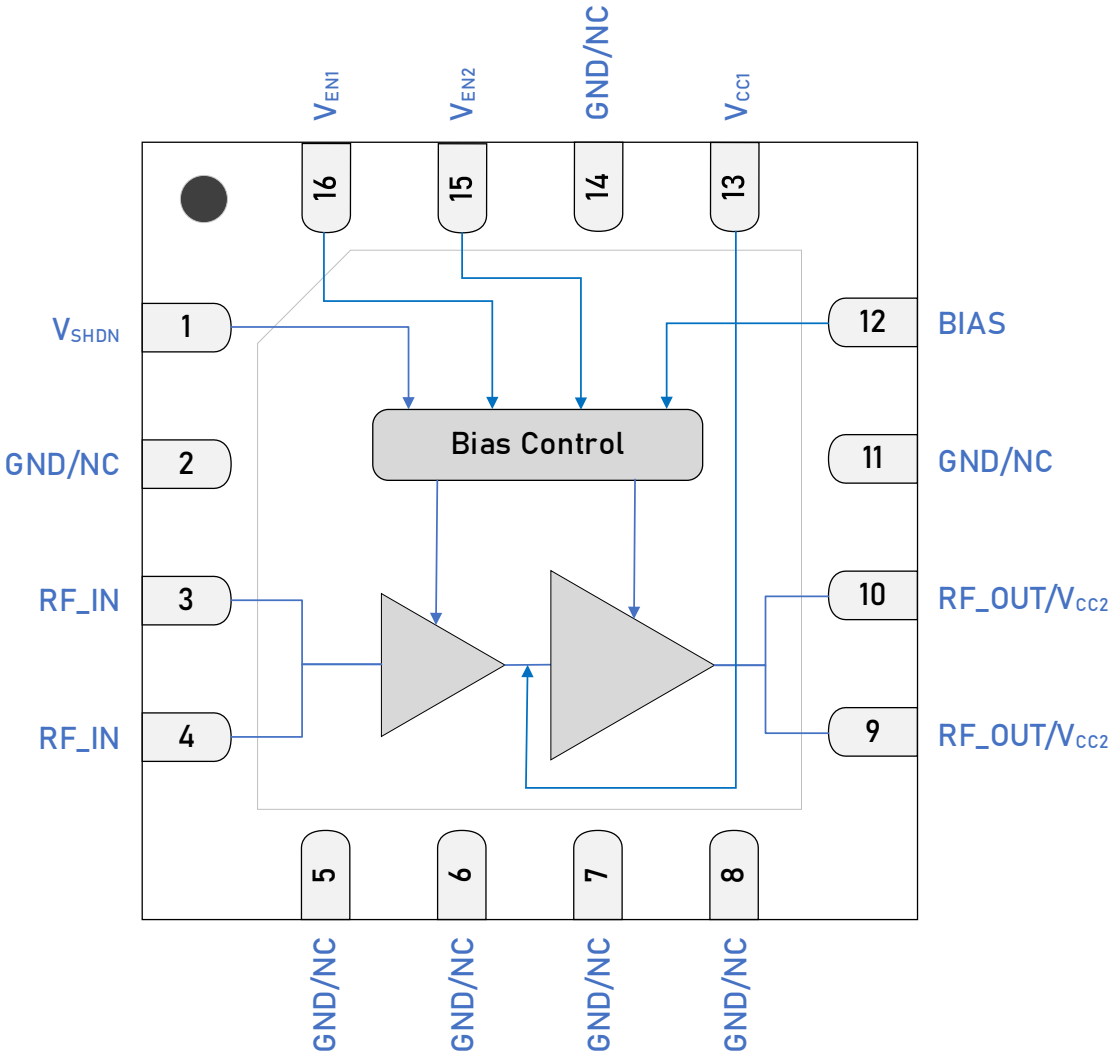

3 x 3 mm QFN-16 Pin Out (Top View)

Downloaded from Arrow.com.

Pin Assignments

Pin	Name	Description	Note
1	V_{SHDN}	Digital Shutdown Pin	$V_{SHDN} \geq 1.8$ V (Logic HIGH) disables device. $V_{SHDN} \leq 0.8$ V (Logic LOW) enables device.
2, 5, 6, 7, 8, 11, 14	GND/NC	Ground or No Connect	No internal connection to die. These pins can be left unconnected or be connected to ground (recommended). Use a via as close to the pin as possible if grounded.
3, 4	RF_IN	RF Input	Pins 3 & 4 tied together on system board. An external DC blocking capacitor must be used.
9, 10	RF_OUT/V_{CC2}	PA Output/Bias Voltage	Pins 9 & 10 tied together on system board. V_{CC2} must be applied to this pin via an RF choke.
12	Bias	Bias Circuit Supply	Connect to V_{CC2} through external resistor.
13	V_{CC1}	Bias Voltage	Connect V_{CC1} through an external inductor and capacitive termination (see application schematic).
15	V_{EN2}	Enable2 Voltage Input	V_{EN2} and series resistor set I_{CCQ} for the output stage. $V_{EN2} \leq 0.2$ V disables stage 2.
16	V_{EN1}	Enable1 Voltage Input	V_{EN1} and series resistor set I_{CCQ} for the input stage. $V_{EN1} \leq 0.2$ V disables stage 1. Connecting an external decoupling capacitor to ground is required for optimal NF performance.
PKG BASE	GND	Ground	Provides DC and RF ground for the amplifier, as well as thermal heat sink. Recommend multiple 8-mil vias beneath the package for optimal RF and thermal performance. Refer to evaluation board top layer graphic on schematic page.

Truth Table

Pin	Logic	Condition
V_{SHDN}	LOW	Full Operation
	HIGH	All Amplifiers Off
V_{EN1}	LOW	Stage 1 Amplifier Off
	HIGH	Stage 1 Amplifier On
V_{EN2}	LOW	Stage 2 Amplifier Off
	HIGH	Stage 2 Amplifier On

Guerrilla RF Proprietary Information. • ©2026 Guerrilla RF, Inc. • All rights reserved. • February 23, 2026

Downloaded from Arrow.com.

Absolute Ratings

Parameter	Symbol	Min.	Max.	Unit
Supply Voltage	V_{CC}	3	5.25	V
RF Input Power: 50 Ω, V_{CC} = 5 V, CW Tone, 100% Duty Cycle, $T_{PKG\ BASE}$ = 25 °C.	$P_{IN\ MAX\ -\ 1:1}$		20	dBm
RF Input Power: Load VSWR ≤ 3.5:1, all phase angles, V_{CC} = 5 V, CW Tone, 100% Duty Cycle, $T_{PKG\ BASE}$ = -40 to 85 °C (≤ 5.2:1 for 25 to 85 °C).	$P_{IN\ MAX\ -\ 3.5:1\ (5.21\ at\ 25\ °C)}$		6	dBm
Operating Temperature (package base).	$T_{PKG\ BASE}$	-40	85	°C
Maximum Junction Temperature (MTTF >10^6 hours).	$T_{J\ MAX}$		190	°C
Maximum Dissipated Power Stage 1 (DC only, no RF applied).	$P_{DISS\ MAX}$		750	mW
Maximum Dissipated Power Stage 2 (DC only, no RF applied).	$P_{DISS\ MAX}$		2250	mW
Shutdown Voltage	V_{SHDN}		** 5.25	V

Electrostatic Discharge

Charged Device Model	CDM	750		V
Human Body Model	HBM	500		V

Storage

Storage Temperature	T_{STG}	-65	150	°C
Moisture Sensitivity Level	MSL		1	--

** V_{SHDN} = 5.25 V yields I_{SHDN} = 512 µA. I_{SHDN} decreases linearly vs. V_{SHDN} to 64 µA with V_{SHDN} = 1.8 V. This linear relationship can be used to place series bias R in line with V_{SHDN} voltage: use pin condition V_{SHDN}/I_{SHDN} = 2.4V/137µA.

Calculate bias R for 5V/137µA: Bias R = (5-2.4)/(0.000137) = 19 kΩ.

Caution! ESD Sensitive Device

Exceeding Absolute Maximum Rating conditions may cause permanent damage to the device.

Note: For additional information, please refer to *Manufacturing Note MN-001 — Package and Manufacturing Information.*

All Guerrilla RF products are provided in RoHS compliant lead (Pb)-free packaging requiring no exemptions. Additional information for this topic can be found at this link - *Environmental and Restricted Substance Statement Library.*

Guerrilla RF Proprietary Information. • ©2026 Guerrilla RF, Inc. • All rights reserved. • February 23, 2026
www.guerrilla-rf.com • (336) 510-7840 • sales@guerrilla-rf.com • 2000 Pisgah Church Road. Greensboro, NC 27455

Downloaded from Arrow.com.

Recommended Operating Conditions

Parameter	Symbol	Specification			Unit	Condition
		Min.	Typ.	Max.		
Supply Voltage	V_{CC}	3	5	5.25	V	
RF Frequency Range	F_{RF}	100		600	MHz	Typical application schematic using the 450 to 470 MHz tuning set (**notes 1 & 2**).
Operating Temperature (package base)	$T_{PKG\ BASE}$	-40		85	°C	
RF_IN Port Impedance	Z_{RF_IN}		50		Ω	Single-ended with 3-element Match.
RF_OUT Port Impedance	Z_{RF_OUT}		50		Ω	Single-ended with 5-element Match.

Note 1: Operation outside of this range is supported by using different custom tunes. Examples of other optimized tunes can be found here: GRF5604 Custom Tunes

Note 2: Contact the Guerrilla RF applications team for guidance on optimizing the tuning of the device for alternative bands.

Guerrilla RF Proprietary Information. • ©2026 Guerrilla RF, Inc. • All rights reserved. • February 23, 2026

Downloaded from Arrow.com.

Nominal Operating Parameters – General

The following conditions apply unless noted otherwise: typical application schematic using the 450 to 470 MHz tuning set. V_{CC} = 5 V, V_{SHDN} = LOW, I_{CCQ} = 247 mA. M1 = 1960 Ω, M5 = 6040 Ω, F_{TEST} = 460 MHz, 50 Ω system impedance. $T_{PKG\ BASE}$ = 25 °C. Evaluation board losses are included within the specifications.

Parameter	Symbol	Specification			Unit	Condition
		Min.	Typ.	Max.		
Supply Current (Quiescent)	I_{CCQ}		247		mA	I_{CCQ1} + I_{CCQ2}. No RF applied.
Supply Current with RF Applied	I_{CC}		2050		mA	I_{CC1} + I_{CC2}. RF applied, P_{OUT} = 38 dBm.
Enable Current 1	$I_{ENABLE1}$		2.1		mA	V_{CC} = 5 V. $T_{PKG\ BASE}$ = 25 °C.
Enable Current 2	$I_{ENABLE2}$		0.4		mA	V_{CC} = 5 V. $T_{PKG\ BASE}$ = 25 °C.
Operating Temperature Range	$T_{PKG\ BASE}$	-40		85	°C	Measured on package base.
Logic Input Low	V_{IL}	0		0.9	V	Applies to V_{SHDN} Input.
Logic Input High	V_{IH}	1.8		V_{CC}	V	Applies to V_{SHDN} Input.
Logic Current Low	I_{IL}		1.3		nA	Applies to V_{SHDN} Input. V_{IL} = 0.8 V.
Logic Current High	I_{IH}		64		µA	Applies to V_{SHDN} Input. V_{IH} = 1.8 V.
			248			Applies to V_{SHDN} Input. V_{IH} = 3.3 V.
Switching Rise Time	T_{RISE}		3300		ns	Applies to V_{SHDN} Input.
Switching Fall Time	T_{FALL}		32		ns	Applies to V_{SHDN} Input.

Disabled Mode

Supply Current (Quiescent)	$I_{CCQ\text{-}SHDN}$		12		µA	V_{CC} = 5 V, $V_{SHDN}/V_{EN1}/V_{EN2}$ = HIGH.
Enable Current 1	$I_{ENABLE1\text{-}SHDN}$		2.4		mA	V_{CC} = 5 V, $V_{SHDN}/V_{EN1}/V_{EN2}$ = HIGH.
Enable Current 2	$I_{ENABLE2\text{-}SHDN}$		0.8		mA	V_{CC} = 5 V, $V_{SHDN}/V_{EN1}/V_{EN2}$ = HIGH.

Thermal Data

Stage 1: Thermal Resistance (Infrared Scan). DC only (no RF applied).	Θ_{JC}		80		°C/W	On standard evaluation board **(note 3)**.
Stage 2: Thermal Resistance (Infrared Scan). DC only (no RF applied).	Θ_{JC}		20		°C/W	On standard evaluation board **(note 3)**.
Thermal Data Stage 1 & 2: see plot of junction temp vs. output power.	T_J				°C	V_{CC} = V_{EN1} = V_{EN2} = 5 V. On standard evaluation board **(note 3)**.

Note 3: MTTF > 10^6 hours for T_J ≤ 190 °C.

Guerrilla RF Proprietary Information. • ©2026 Guerrilla RF, Inc. • All rights reserved. • February 23, 2026
www.guerrilla-rf.com • (336) 510-7840 • sales@guerrilla-rf.com • 2000 Pisgah Church Road. Greensboro, NC 27455
Downloaded from Arrow.com.

Nominal Operating Parameters – RF

The following conditions apply unless noted otherwise: typical application schematic using the 450 to 470 MHz tuning set. V_{CC} = 5 V, V_{SHDN} = LOW, I_{CCQ} = 247 mA. M1 = 1960 Ω, M5 = 6040 Ω, F_{TEST} = 460 MHz, 50 Ω system impedance. $T_{PKG\ BASE}$ = 25 °C. Evaluation board losses are included within the specifications.

Parameter	Symbol	Specification			Unit	Condition
		Min.	Typ.	Max.		
Small Signal Gain	S21		37.5		dB	V_{CC} = 5 V, P_{IN} = -25 dBm.
Standby Mode Gain	$S21_{STBY}$		-50		dB	Disabled mode: $V_{SHDN}/V_{EN1}/V_{EN2}$ = HIGH, P_{IN} = 0 dBm.
Input Return Loss	S11		< -8.5		dB	F_{RF} = 450 to 470 MHz.
Output Return Loss	S22		< -8.5		dB	F_{RF} = 450 to 470 MHz.
Reverse Isolation	S12		< -50		dB	F_{RF} = 450 to 470 MHz.
Noise Figure	NF		3.5		dB	On standard evaluation board.
Output 1 dB Compression Power	OP1dB	31.5	38		dBm	V_{CC} = 5 V, sine wave input.

Note 4: MIN/MAX limits defined using *modelled estimates* that account for part-to-part variations and expected process spreads. As additional production lots are fabricated, accumulated test data will be used to refine the MIN/MAX limits.

Guerrilla RF Proprietary Information. • ©2026 Guerrilla RF, Inc. • All rights reserved. • February 23, 2026

Downloaded from Arrow.com.

GRF5604 Typical Operating Curves: 450 to 470 MHz Tune

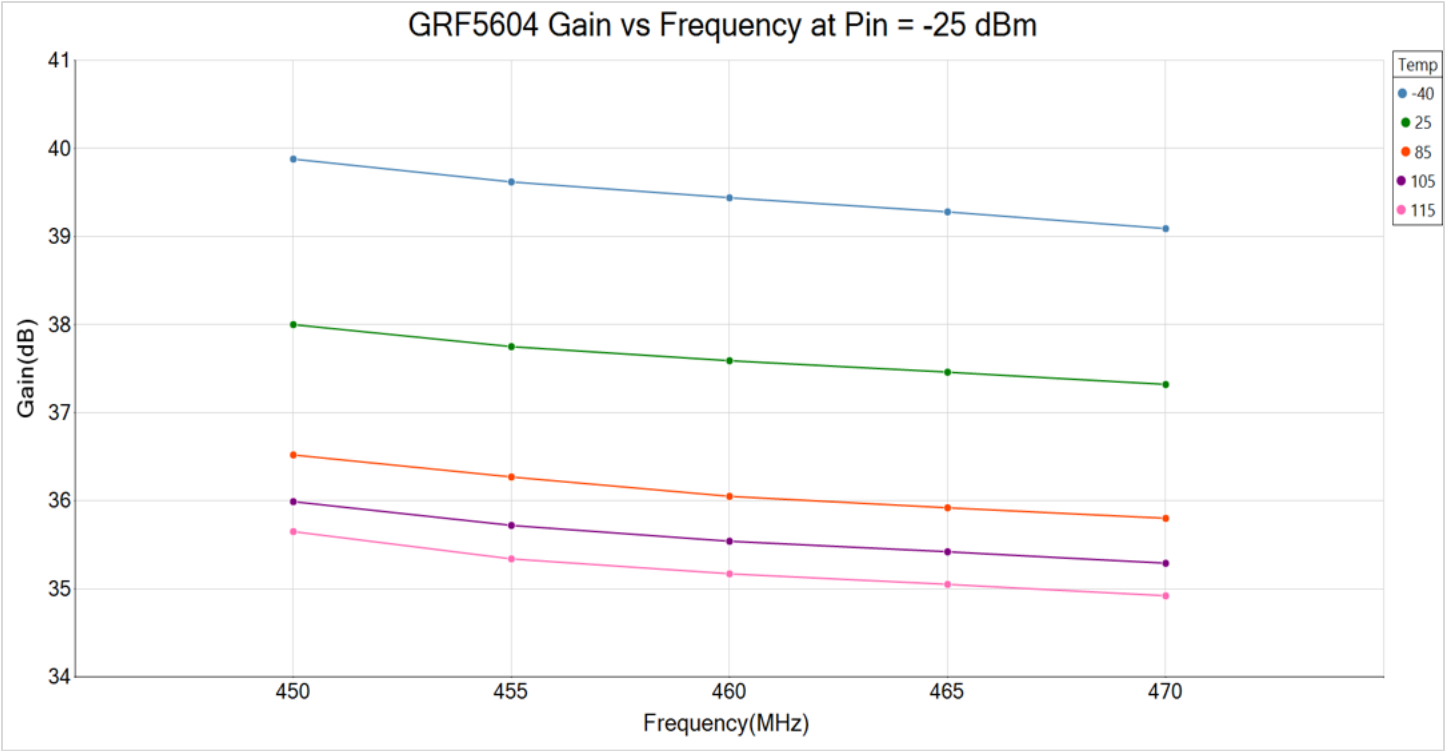

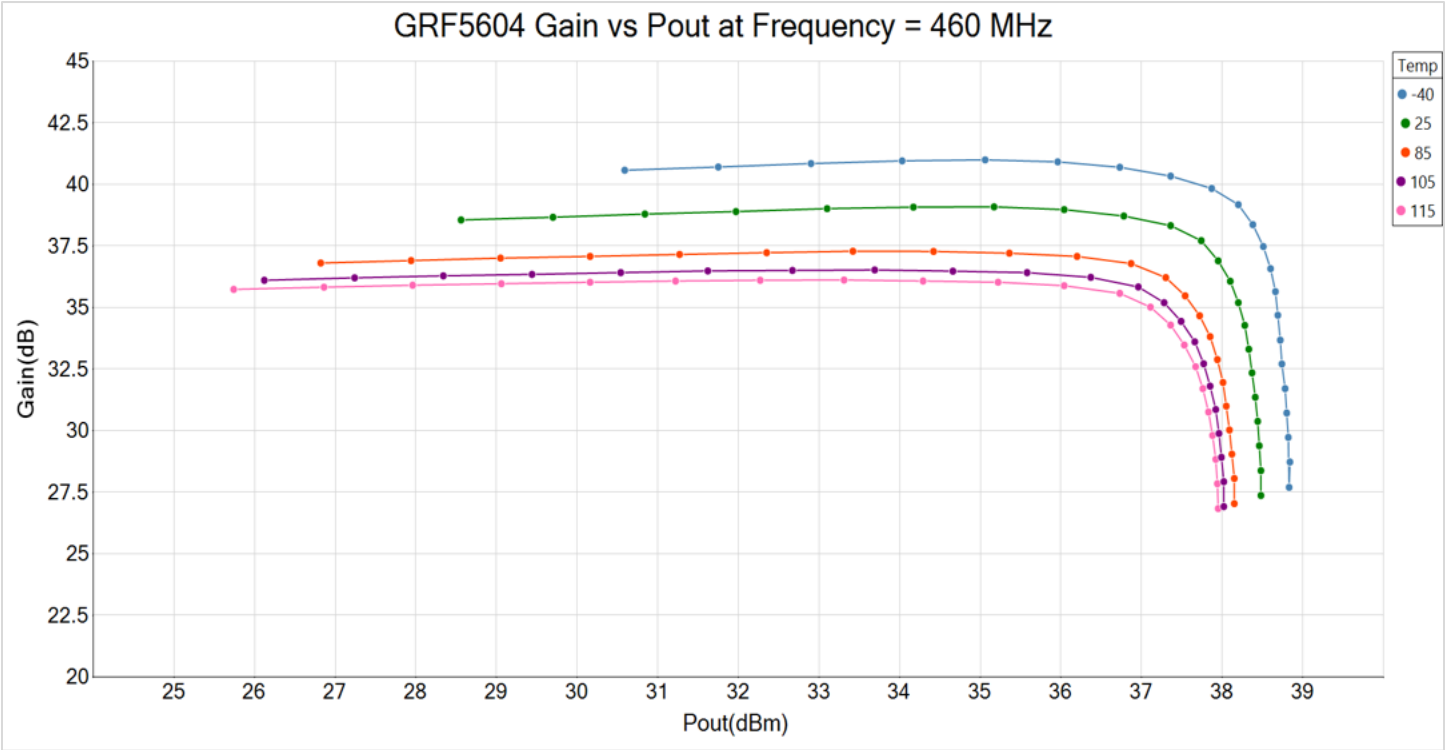

Guerrilla RF Proprietary Information. • ©2026 Guerrilla RF, Inc. • All rights reserved. • February 23, 2026
www.guerrilla-rf.com • (336) 510-7840 • sales@guerrilla-rf.com • 2000 Pisgah Church Road. Greensboro, NC 27455

Downloaded from Arrow.com.

GRF5604 Typical Operating Curves: 450 to 470 MHz Tune

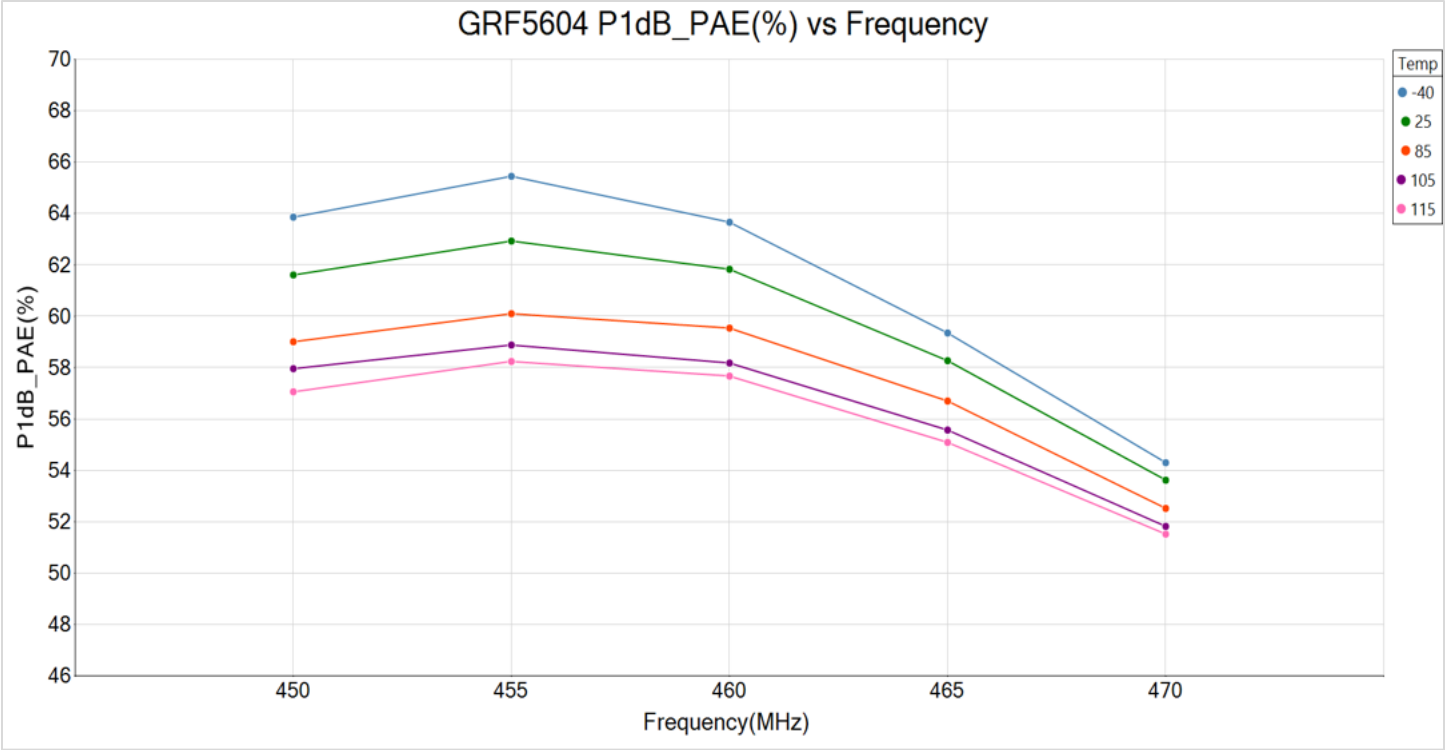

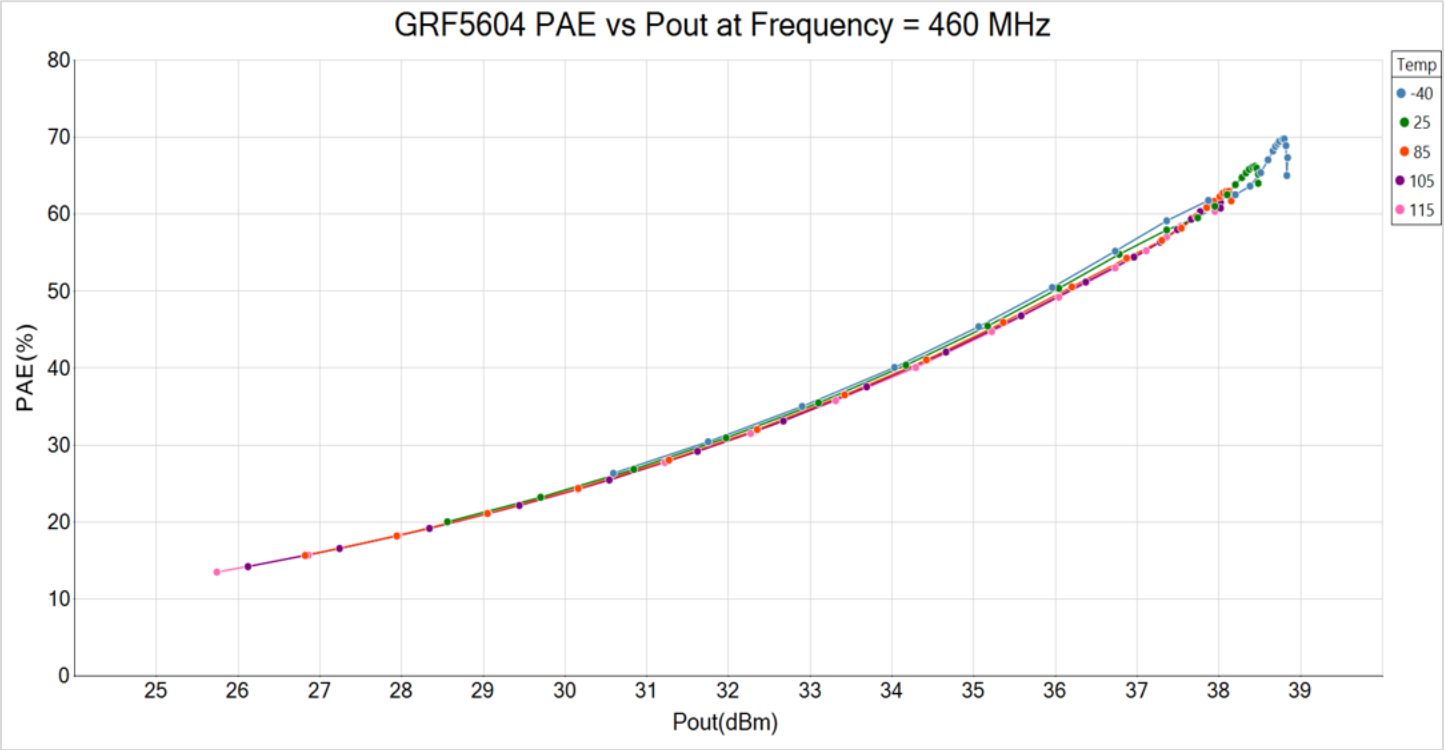

Downloaded from Arrow.com.

GRF5604 Typical Operating Curves: 450 to 470 MHz Tune

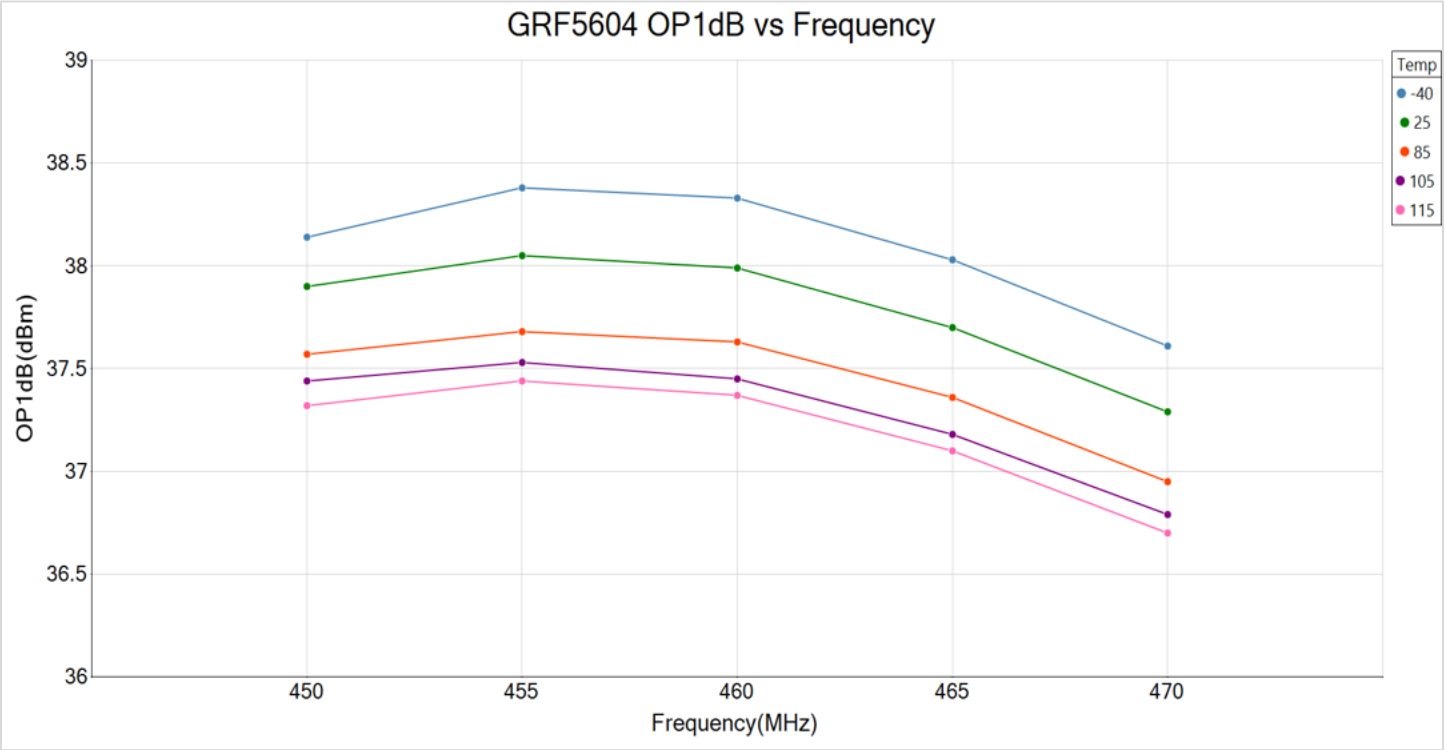

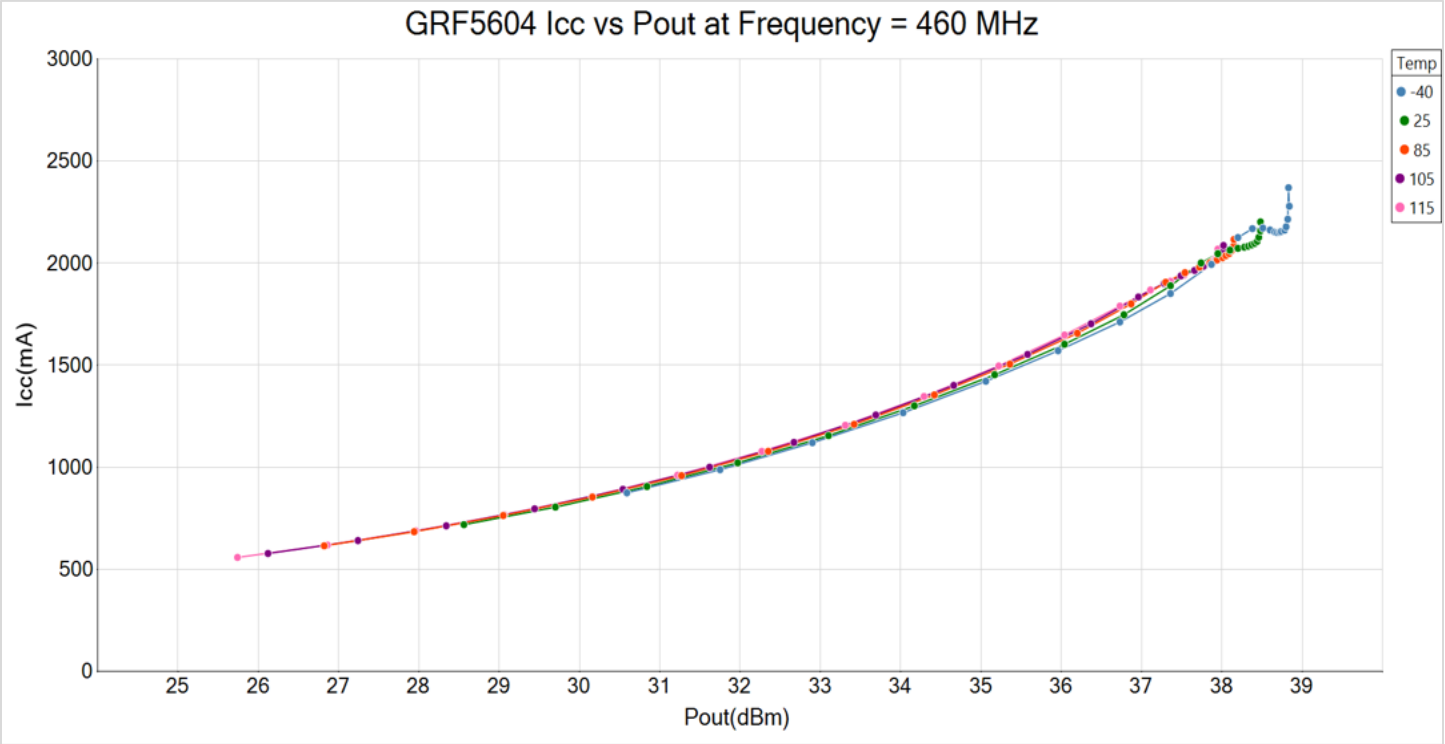

Guerrilla RF Proprietary Information. • ©2026 Guerrilla RF, Inc. • All rights reserved. • February 23, 2026
www.guerrilla-rf.com • (336) 510-7840 • sales@guerrilla-rf.com • 2000 Pisgah Church Road. Greensboro, NC 27455
Downloaded from Arrow.com.

GRF5604 Typical Operating Curves: S-Parameters (450 to 470 MHz Tune)

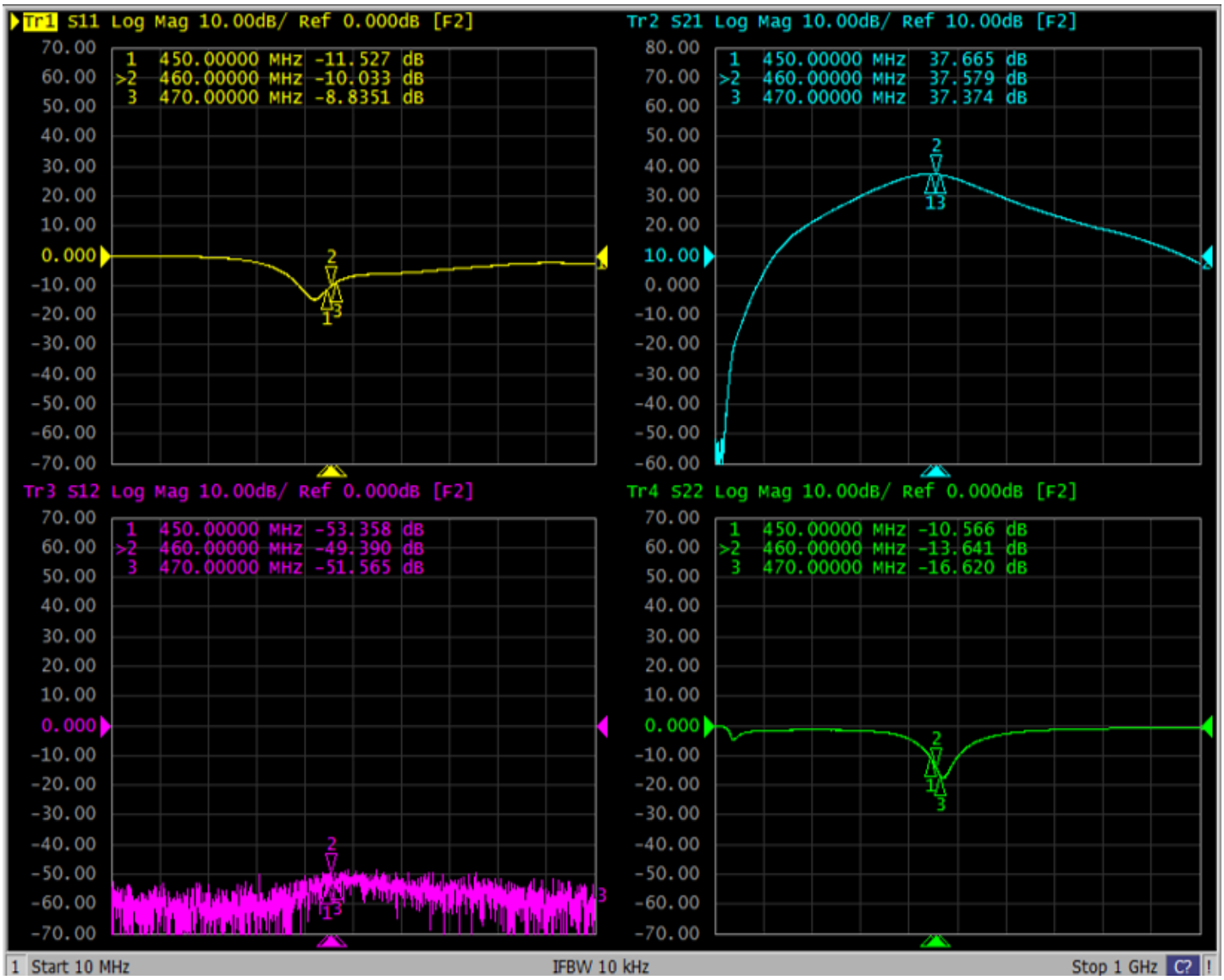

Downloaded from Arrow.com.

GRF5604 Typical Operating Curves: Stability Mu (10 MHz to 20 GHz)

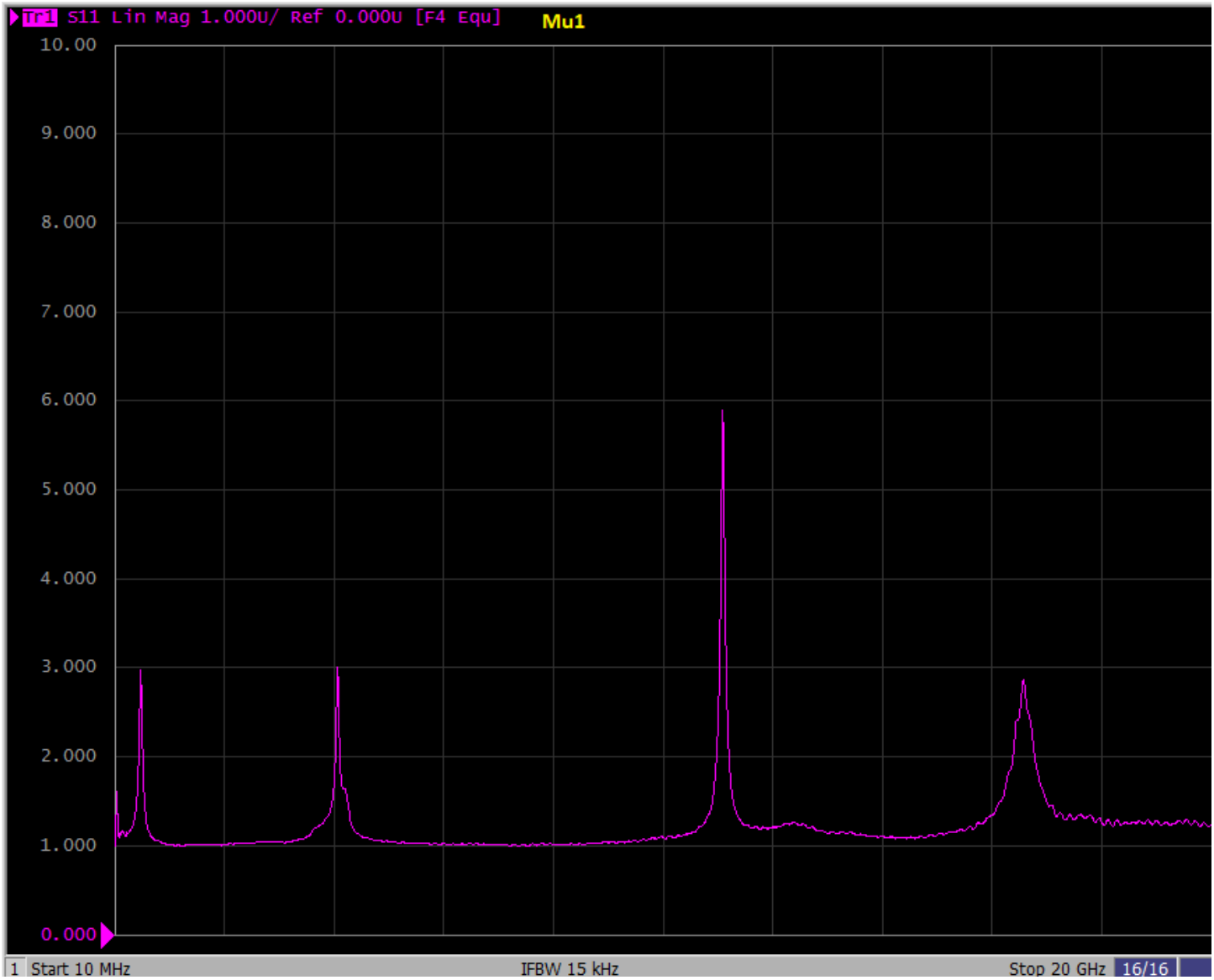

Note: Mu factor ≥ 1.0 implies unconditional stability (small signal).

Guerrilla RF Proprietary Information. • ©2026 Guerrilla RF, Inc. • All rights reserved. • February 23, 2026
www.guerrilla-rf.com • (336) 510-7840 • sales@guerrilla-rf.com • 2000 Pisgah Church Road. Greensboro, NC 27455
Downloaded from Arrow.com.

GRF5604 Typical Operating Curves: Junction Temperature (per application schematic at 85 °C)

GRF5604, being a 2-stage device, sees one of the stages governing junction temperature over power sweep. Red line = 25.5 dBm shows where T_J is equivalent in both stages. At left of red line, stage 1 governs T_J (Q1 T_J is higher). To the right of red line, stage 2 governs T_J (Q2 T_J is higher).

Setting bias resistor M1 and M5 per application schematic ensures best linearity and yields thermal performance shown in the plot. If the application does not require high IMD3/ACLR linearity, bias resistor can be adjusted higher. This will lower bias point(s) and junction temperature will be contained within/below that shown in the plot.

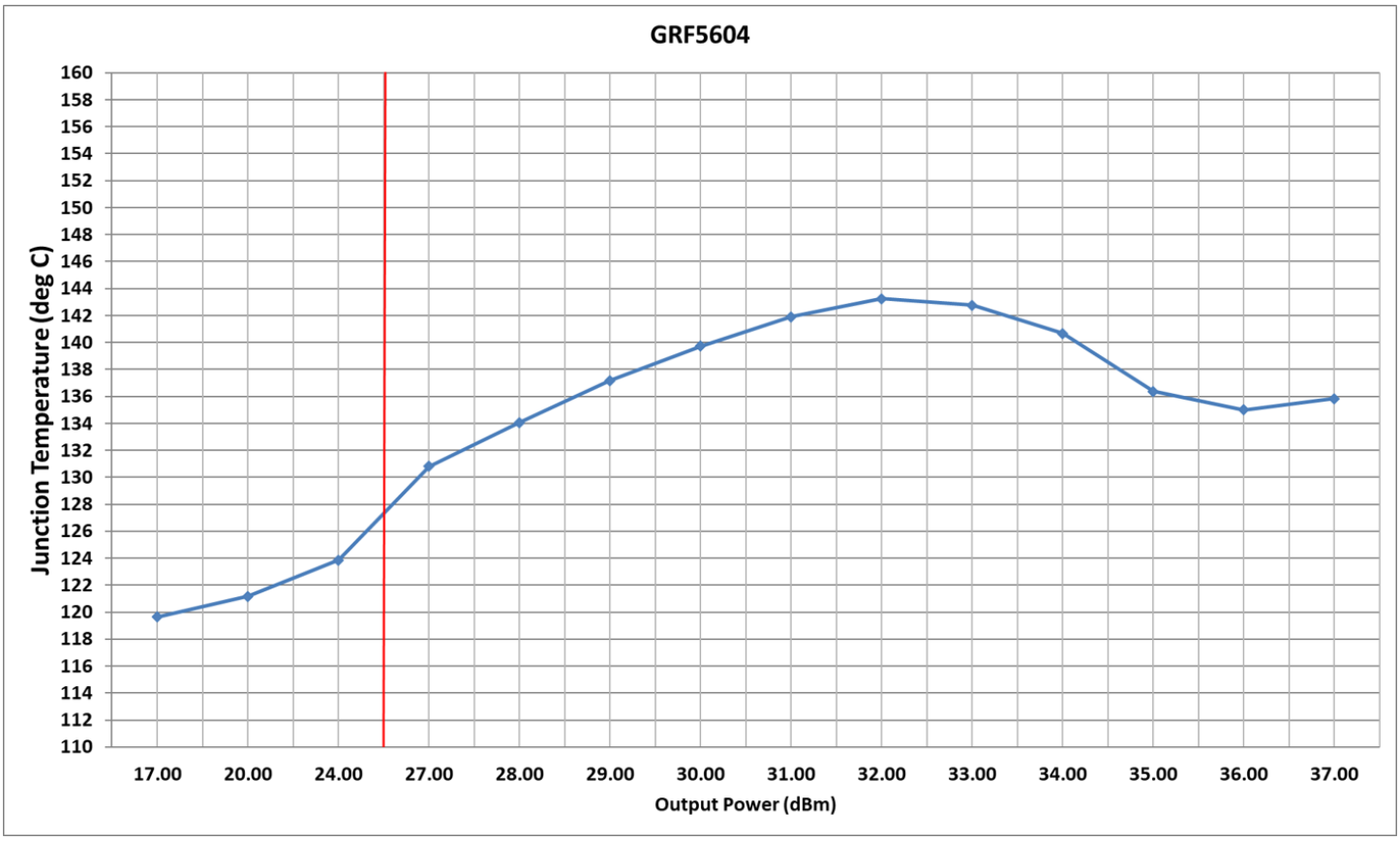

Downloaded from Arrow.com.

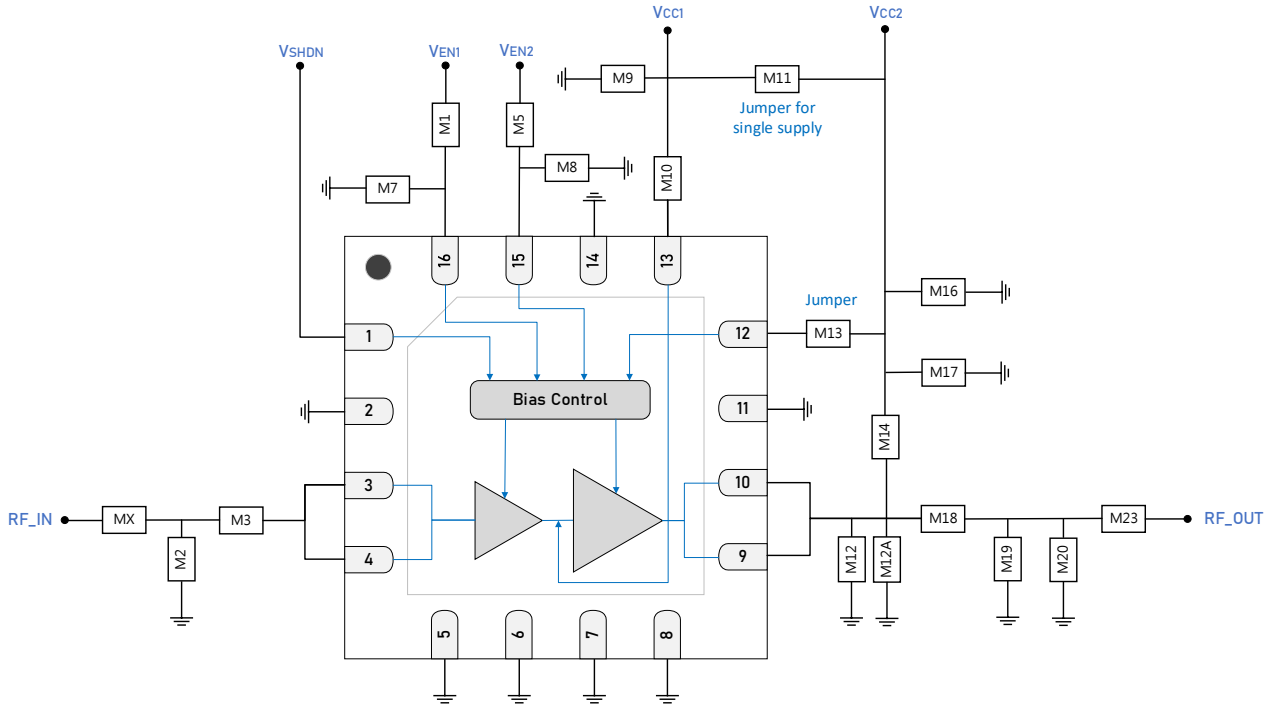

GRF5604 Standard Evaluation Board Schematic

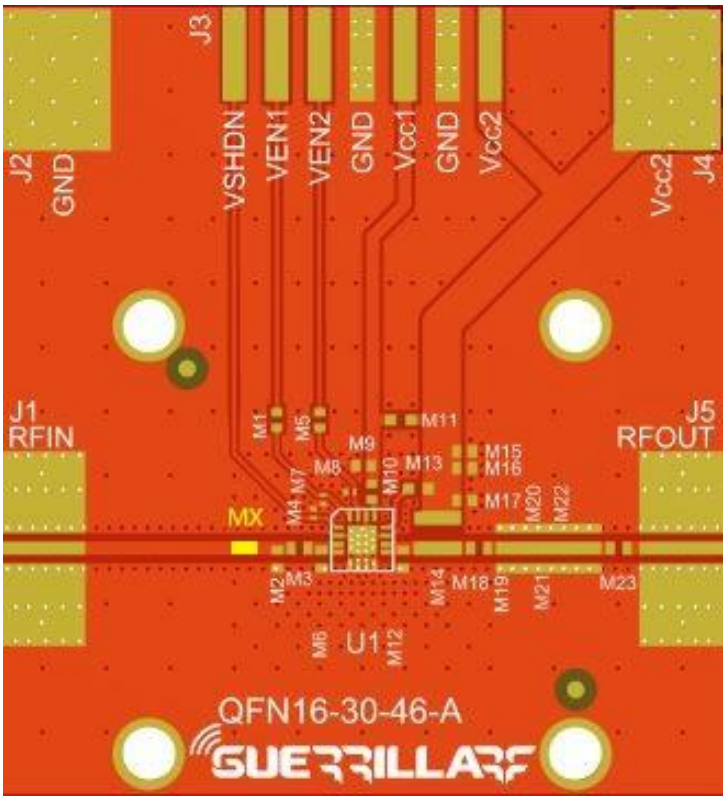

GRF5604 Evaluation Board Assembly Diagram

Guerrilla RF Proprietary Information. • ©2026 Guerrilla RF, Inc. • All rights reserved. • February 23, 2026
www.guerrilla-rf.com • (336) 510-7840 • sales@guerrilla-rf.com • 2000 Pisgah Church Road. Greensboro, NC 27455
Downloaded from Arrow.com.

GRF5604 Evaluation Board Assembly Diagram Reference: 450 to 470 MHz Tune

Component	Type	Manufacturer	Family	Value	Package Size	Substitution
M1	Resistor	Various	1%	1960 Ω	0402	ok
M2	Inductor	Murata	LQG	10 nH	0402	ok
M3	Capacitor	Murata	GJM	33 pF	0402	ok
MX	Capacitor	Murata	GJM	10 pF	0402	ok
M5	Resistor	Various	1%	6040 Ω	0402	ok
M7	Capacitor	Murata	GRM	1000 pF	0402	ok
M8	Capacitor	Murata	GRM	1000 pF	0402	ok
M9	Capacitor	Murata	GRM	0.1 µF	0402	ok
M10	Inductor	Coilcraft	0402HP	20 nH	0402	ok
M11	Resistor (jumper)	Various	1%	0 Ω	0402	ok
M12	Capacitor	Murata	GRM	33 pF	0402	ok
M12A	Capacitor	Murata	GJM	2.0 pF	0402	ok
M13	Resistor (jumper)	Various	1%	0 Ω	0402	ok
M14	Inductor	Coilcraft	0908SQ	23 nH	0908	ok
M16	Capacitor	Murata	GRM	** 10 µF	0402	ok
M17	Capacitor	Murata	GRM	1000 pF	0402	ok
M18	Inductor	Murata	LQW18AN 80	2.2 nH	0603	ok
M19	Capacitor	Murata	GJM	27 pF	0402	ok
M20	Capacitor	Murata	GJM	1.8 pF	0402	ok
M23	Capacitor	Murata	GRM	100 pF	0402	ok
Evaluation Board	QFN16-30-46-A	--	--	--	--	--

Notes: Standard evaluation board bias: V_{CC} = 5 V. V_{ENABLE} = 5 V.

** 10 µF must be rated for > 5 V at maximum ambient temperature. Manufacturer Part Number in this case = GRM155C80J106ME11D.

Downloaded from Arrow.com.

Package Outline Drawing

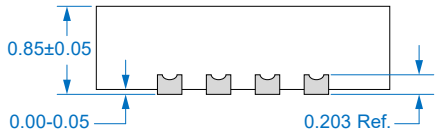

SIDE VIEW

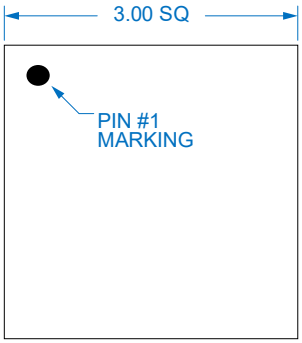

TOP VIEW

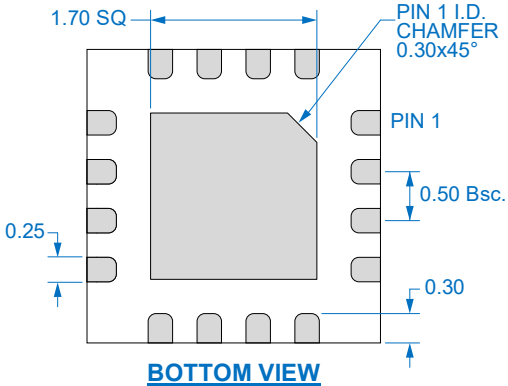

BOTTOM VIEW

Recommended PCB Footprint

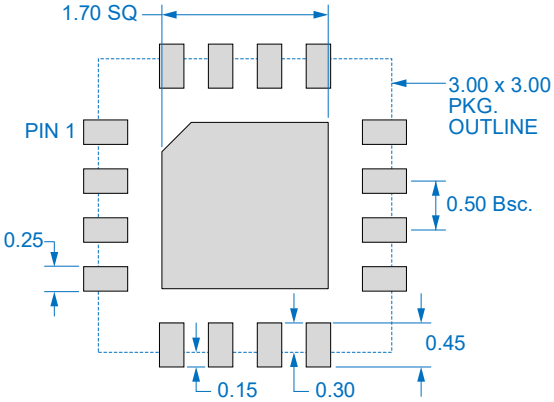

TOP VIEW

QFN-16 3 x 3 mm Package Dimensions and Suggested PCB Footprint (Top View)

Guerrilla RF Proprietary Information. • ©2026 Guerrilla RF, Inc. • All rights reserved. • February 23, 2026

www.guerrilla-rf.com • (336) 510-7840 • sales@guerrilla-rf.com • 2000 Pisgah Church Road. Greensboro, NC 27455

Downloaded from Arrow.com.

Package Marking Diagram

- Line 1: "YY" = YEAR. "WW" = WORK WEEK the device was assembled.
- Line 2: "GRF" = Guerrilla RF.
- Line 3: "XXXX" = Device PART NUMBER.

Tape and Reel Information

Guerrilla RF's tape and reel specification complies with Electronic Industries Alliance (EIA) standards for "Embossed Carrier Tape of Surface Mount Components for Automatic Handling" (reference EIA-481). See the following page for the Tape and Reel Specification and Device Package Information table, which includes units per reel.

Devices are loaded with pins down into the carrier pocket with protective cover tape and reeled onto a plastic reel. Each reel is packaged in a cardboard box. There are product labels on the reel, the protective ESD bag and the outside surface of the box.

For the Tape and Reel Reference Table, please refer to: *Package Manufacturing Information | Guerrilla RF (guerrilla-rf.com)*

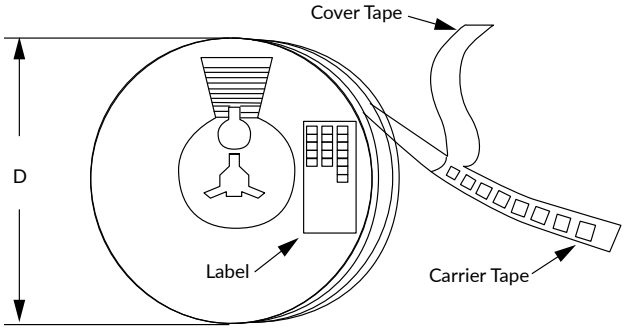

Tape and Reel Packaging with Reel Diameter Noted (D)

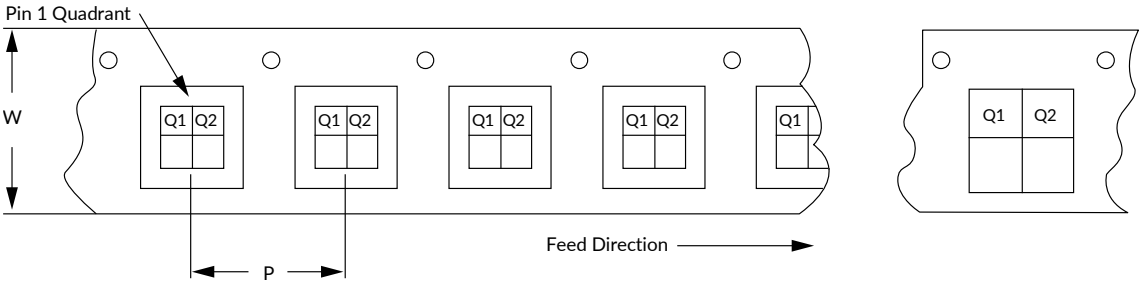

Carrier Tape Width (W), Pitch (P), Feed Direction and Pin 1 Quadrant Information

Downloaded from Arrow.com.

Revision History

Revision Date	Description of Change
August 15, 2023	Advance Data Sheet.
February 26, 2024	Preliminary Data Sheet.
November 22, 2024	Release Ø Data Sheet.
September 18, 2025	Lowered $P_{IN\ MAX}$ specification from 15 to 6 dBm.
November 18, 2025	Added new switching times.
February 23, 2026	Updated Data Sheet to new format. No change to device or device specifications.

Guerrilla RF Proprietary Information. • ©2026 Guerrilla RF, Inc. • All rights reserved. • February 23, 2026

www.guerrilla-rf.com • (336) 510-7840 • sales@guerrilla-rf.com • 2000 Pisgah Church Road. Greensboro, NC 27455
Downloaded from Arrow.com.

Data Sheet Classifications

Data Sheet Status	Notes
Advance	S-parameter and NF data based on EM simulations for the fully packaged device using foundry-supplied transistor S-parameters. Linearity estimates based on device size, bias condition and experience with related devices.
Preliminary	All data based on limited evaluation board measurements taken within the Guerrilla RF Applications Lab. All parametric values are subject to change pending the collection of additional data.
Release Ø	All data based on measurements taken with *production-released* material. TYP values are based on a combination of ATE and bench-level measurements, with MIN/MAX limits defined using *modelled estimates* that account for part-to-part variations and expected process spreads. Although unlikely, future refinements to the TYP/MIN/MAX values may be in order as multiple lots are processed through the factory.
Release A-Z	All data based on measurements taken with production-released material *derived from multiple lots which have been fabricated over an extended period of time*. MIN/MAX limits may be refined over previous releases as more statistically significant data is collected to account for process spreads.

Information in this data sheet is specific to the Guerrilla RF, Inc. ("Guerrilla RF") product identified.

This data sheet, including the information contained in it, is provided by Guerrilla RF as a service to its customers and may be used for informational purposes only by the customer. Guerrilla RF assumes no responsibility for errors or omissions on this data sheet or the information contained herein. Information provided is believed to be accurate and reliable, however, no responsibility is assumed by Guerrilla RF for its use, nor for any infringement of patents, or other rights of third parties, resulting from its use. Guerrilla RF assumes no liability for any data sheet, data sheet information, materials, products, product information, or other information provided hereunder, including the sale, distribution, reproduction or use of Guerrilla RF products, information or materials.

No license, whether express, implied, by estoppel, by implication or otherwise is granted by this data sheet for any intellectual property of Guerrilla RF, or any third party, including without limitation, patents, patent rights, copyrights, trademarks and trade secrets. All rights are reserved by Guerrilla RF.

All information herein, products, product information, data sheets, and data sheet information are subject to change and availability without notice. Guerrilla RF reserves the right to change component circuitry, recommended application circuitry and specifications at any time without prior notice. Guerrilla RF may further change its data sheet, product information, documentation, products, services, specifications or product descriptions at any time, without notice. Guerrilla RF makes no commitment to update any materials or information and shall have no responsibility whatsoever for conflicts, incompatibilities, or other difficulties arising from any future changes.

GUERRILLA RF INFORMATION, PRODUCTS, PRODUCT INFORMATION, DATA SHEETS AND DATA SHEET INFORMATION ARE PROVIDED "AS IS" AND WITHOUT WARRANTY OF ANY KIND, WHETHER EXPRESS, IMPLIED, STATUTORY, OR OTHERWISE, INCLUDING FITNESS FOR A PARTICULAR PURPOSE OR USE, MERCHANTABILITY, PERFORMANCE, QUALITY OR NON-INFRINGEMENT OF ANY INTELLECTUAL PROPERTY RIGHT; ALL SUCH WARRANTIES ARE HEREBY EXPRESSLY DISCLAIMED. GUERRILLA RF DOES NOT WARRANT THE ACCURACY OR COMPLETENESS OF THE INFORMATION, TEXT, GRAPHICS OR OTHER ITEMS CONTAINED WITHIN THESE MATERIALS. GUERRILLA RF SHALL NOT BE LIABLE FOR ANY DAMAGES, INCLUDING BUT NOT LIMITED TO ANY SPECIAL, INDIRECT, INCIDENTAL, STATUTORY, OR CONSEQUENTIAL DAMAGES, INCLUDING WITHOUT LIMITATION, LOST REVENUES OR LOST PROFITS THAT MAY RESULT FROM THE USE OF THE MATERIALS OR INFORMATION, WHETHER OR NOT THE RECIPIENT OF MATERIALS HAS BEEN ADVISED OF THE POSSIBILITY OF SUCH DAMAGE.

Customers are solely responsible for their use of Guerrilla RF products in the Customer's products and applications or in ways which deviate from Guerrilla RF's published specifications, either intentionally or as a result of design defects, errors, or operation of products outside of published parameters or design specifications. Customers should include design and operating safeguards to minimize these and other risks. Guerrilla RF assumes no liability or responsibility for applications assistance, customer product design, or damage to any equipment resulting from the use of Guerrilla RF products outside of stated published specifications or parameters.

Downloaded from Arrow.com.