We connect and protect

# EuropacPRO Cover Plate, Universal, 84 HP, 415 mm

## CATALOG NUMBER

**24560-055**

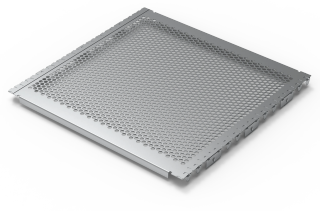

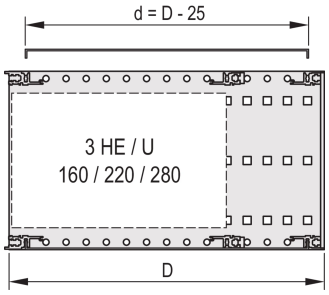


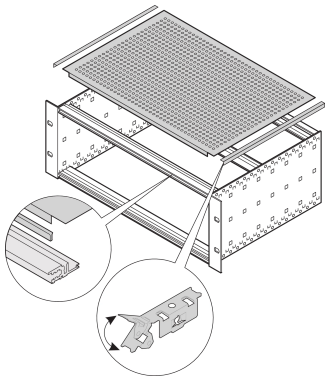

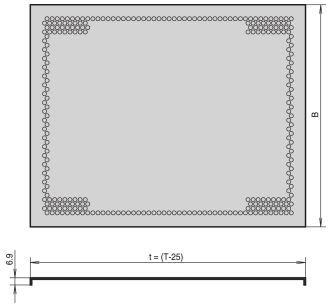


A cover plate is used for electromagnetic shielding or as mechanical protection. The cover can be used is non-standard boards will be assembled into the subrack.

## CERTIFICATIONS

RoHS COMPLIANT

## FEATURES

- Shielding is provided by optional EMC stainless steel gaskets, between cover plate and side panel
- For variable positioning of horizontal rails e.g. for PCBs with non-standard formats
- Perforation degree 58%

Downloaded from Arrow.com.

Suitable for use with all horizontal rails

## PRODUCT ATTRIBUTES

Rack Width: 84HP

Package Quantity: 2

Finish: Passivated

Material: Aluminum

Product Family: EuropacPRO

Product Type: Cover Plate

Type: Universal

Works With: Subracks

Net Weight: 0.693kg

Package Unit: Pair

## ADDITIONAL PRODUCT DETAILS

In addition, 4 contact strips per subrack are required to affix cover to horizontal rail.

## WARNING

nVent products shall be installed and used only as indicated in nVent's product instruction sheets and training materials. Instruction sheets are available at www.nvent.com and from your nVent customer service representative. Improper installation, misuse, misapplication or other failure to completely follow nVent's instructions and warnings may cause product malfunction, property damage, serious bodily injury and death and/or void your warranty.


**North America**
All locations
+1.763.422.2661
Chat with us:
nvent.com/schroff

**Europe**
Straubenhardt, Germany
+49.7082.794.0
Betschdorf, France
+33.3.88.90.64.90
Warsaw, Poland
+48.22.209.98.35
Assago, Italy
+39.02.932.7141
Chat with us:
nvent.com/schroff

**Asia**
Shanghai, China
+86.21.2412.6943
Qingdao, China
+86.532.8771.6101
Singapore
+65.6768.5800
Shin-Yokohama, Japan
+81.45.476.0271
Chat with us:
nvent.com/schroff

**Middle East & India**
Dubai, United Arab Emirates
+971.4.378.1700
Bangalore, India
+91.80.6715.2001
Istanbul, Turkey
+90.216.250.7374
Chat with us:
nvent.com/schroff



Our powerful portfolio of brands:

CADDY ERICO HOFFMAN ILSCO SCHROFF TRACHTE

©2026 nVent. All nVent marks and logos are owned or licensed by nVent Services GmbH or its affiliates. All other trademarks are the property of their respective owners. nVent reserves the right to change specifications without notice.

This document is system-generated.





Downloaded from Arrow.com.