REVISIONS			
REV	DESCRIPTION, ECN, EAR NO.	DATE	APP'D
B	PRODUCT DRAWING (EAR 14655)	OCT26/18	K.L.
C	PRODUCT DRAWING (EAR 14655)	NOV21/18	K.L.

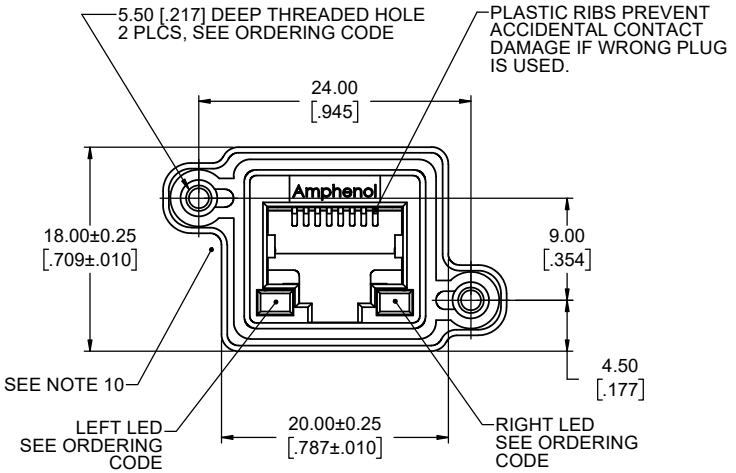

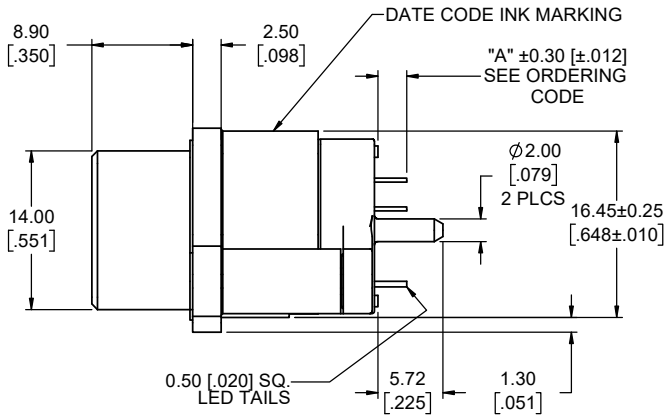

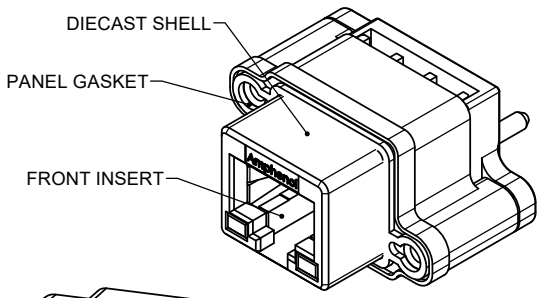

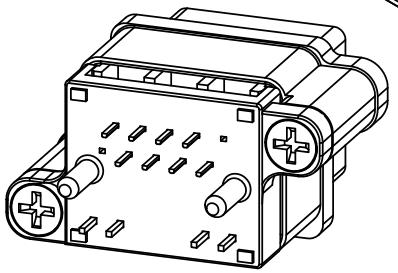

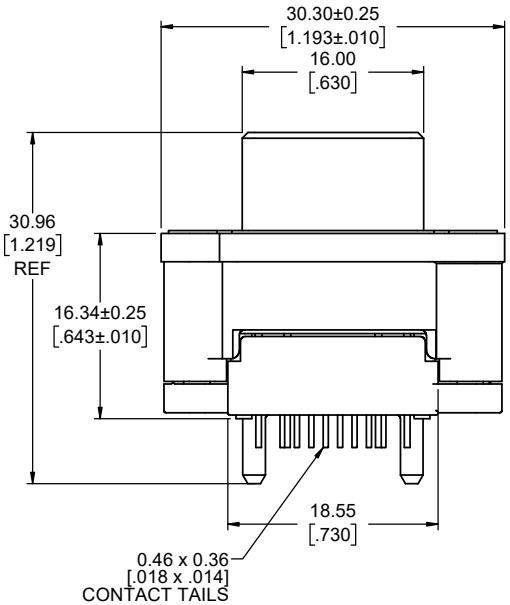

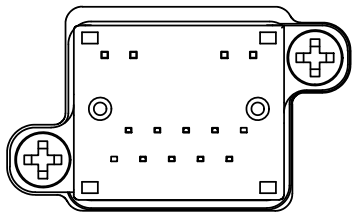

ORDERING CODE: M R J R - 9 4 8 X - X C

SERIES, RUGGED RJ

CAT6A RJ45 RECEPTACLE,
VERTICAL PCB TAIL,
8 CONTACTS

LED OPTION:
0 = NONE
1 = GREEN LEFT, YELLOW RIGHT
4 = YELLOW LEFT, GREEN RIGHT
5 = GREEN LEFT, GREEN RIGHT
7 = RED LEFT, GREEN RIGHT
A = BI-COLOUR GREEN/YELLOW LEFT
BI-COLOUR GREEN/YELLOW RIGHT
D = GREEN LEFT
BI-COLOUR GREEN/YELLOW RIGHT
E = YELLOW LEFT
BI-COLOUR GREEN/YELLOW RIGHT

TAIL LENGTH AND MOUNTING HOLE THREAD OPTION:
0 = "A" 2.54 [.100], #4-40 UNC
B = "A" 3.81 [.150], #4-40 UNC
M = "A" 2.54 [.100], M3 X 0.5
P = "A" 3.81 [.150], M3 X 0.5

SINGLE PORT, EXTRA CLEARANCE NEAR SHELL MOUNTING HOLES

SPECIAL CONNECTORS
MANY UNIQUE FEATURES ARE READILY AVAILABLE TO SUIT CUSTOMER REQUIREMENTS. CONSULT WITH AMPHENOL CANADA FOR DETAILS.

NOTES:

1. MATERIALS: ALL MATERIALS ARE RoHS COMPLIANT PER EU DIRECTIVE 2011/65/EU AND AMENDMENTS
   - SHELL - DIECAST ZINC, NICKEL PLATED
   - CONTACTS - PHOSPHOR BRONZE WITH 1.27µm [50 µ"] MIN GOLD OVER 1.27µm [50 µ"] MIN NICKEL ON THE MATING AREA AND MATTE TIN OVER NICKEL ON THE CONTACT TAILS.
   - INSERTS - ENGINEERING THERMOPLASTIC, UL94V-0 FLAMMABILITY RATING, REAR INSERTS: BLACK NYLON, FRONT INSERT: CLEAR POLYCARBONATE
   - GASKET - SILICONE RUBBER, CONDUCTIVE, BLACK
   - LED'S - EPOXY LENS, STEEL TAILS WITH TIN PLATING
   - PCB - FR-4 FIBERGLASS, LEAD FREE, UL94V-0 FLAMMABILITY RATING
2. ENVIRONMENTAL PERFORMANCE PER IEC 60529 CODE IP67 FOR SEAL BETWEEN MATING AREA AND PCB SIDE OF CONNECTOR. GASKET PROVIDES SEAL TO INSIDE FACE OF PANEL.
3. CURRENT RATING: 1.25 AMPERES
4. CONTACT RESISTANCE: 30 MILLIOHMS MAXIMUM
5. OPERATING TEMPERATURE: -40C TO +105C
6. LED CHARACTERISTICS: FORWARD DC CURRENT 25 mA MAX.
   FORWARD VOLTAGE 2.5V MAX.@ 2 mA
7. RECOMMENDED TORQUE FOR PANEL MOUNT SCREWS: 0.45 TO 0.65 N-m (4.0 TO 5.75 IN-LBS) FOR STEEL SCREWS WITH 3.00 (.118) THREAD ENGAGEMENT.
8. CUSTOMER TO VERIFY THAT ALL PROCESS CLEANERS ARE COMPATIBLE WITH POLYCARBONATE MATERIAL.
9. AVAILABLE MATING AREA COVERS PROVIDE ADDED PROTECTION. CONSULT WITH AMPHENOL CANADA FOR MORE DETAILS.
10. COMPARED TO DRAWING P-MRJR-54XX-XF, PARTS ON THIS DRAWING HAVE EXTRA CLEARANCE NEAR THE SHELL MOUNTING HOLES (2 PLCS).

THIS DOCUMENT CONTAINS PROPRIETARY INFORMATION AND SUCH INFORMATION MAY NOT BE DISCLOSED TO OTHERS FOR ANY PURPOSE OR USED FOR MANUFACTURING PURPOSES WITHOUT WRITTEN PERMISSION FROM AMPHENOL CANADA CORP.

UNLESS SPECIFIED OTHERWISE	DRAWN	M. PAHULJE	MAR27/18
PRIMARY UNITS MILLIMETERS	CHECKED	K.LAMBIE	APR25/18
SECONDARY INCHES	M.E. APP'D		
REFERENCE IN PARENTHESES	Q.A. APP'D		
GENERAL TOLERANCES	DWG APPR.		
1 DECIMAL PLACE	ENG. REL. NO.	EAR 14655	
2 DECIMAL PLACES ±0.15	REF.		
3 DECIMAL PLACES	THIRD ANGLE PROJECTION	DO NOT SCALE DRAWING	
ANGULAR DEGREES			

Amphenol Canada Corp.
www.amphenolcanada.com

MRJR SERIES RUGGED CAT6A MODULAR JACK, 8 CONTACTS, VERTICAL, LED, THREAD, & TAIL LENGTH OPTIONS, EXTRA SHELL CLEARANCE, RoHS COMPLIANT

DWG. NO. P-MRJR-948X-XC REV C

CODE ID NO. 03554 | DWG SIZE: X | SCALE: 3:1 | SHEET 1 OF 2

Downloaded from Arrow.com.

REVISIONS			
REV	DESCRIPTION, ECN, EAR NO.	DATE	APP'D
B	PRODUCT DRAWING (EAR 14655)	OCT26/18	K.L.
C	PRODUCT DRAWING (EAR 14655)	NOV21/18	K.L.

RECOMMENDED PCB LAYOUT
COMPONENT SIDE OF BOARD

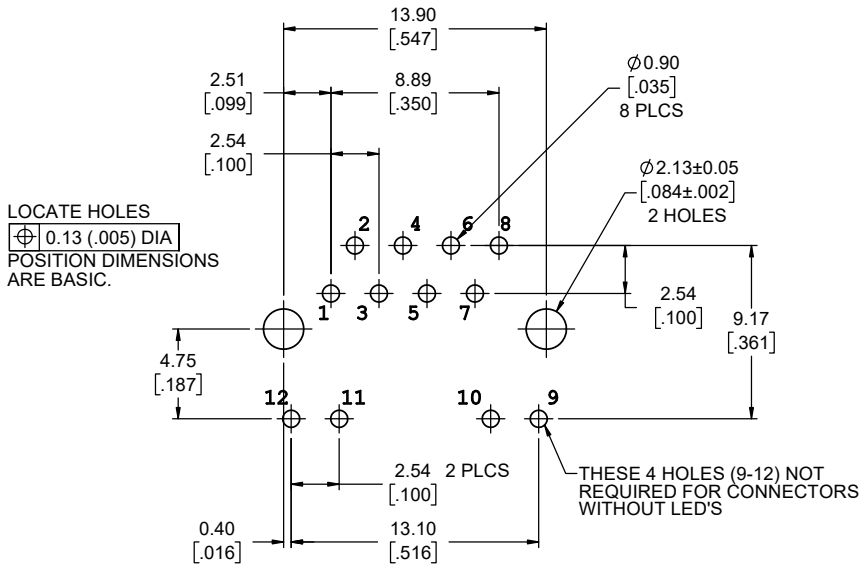

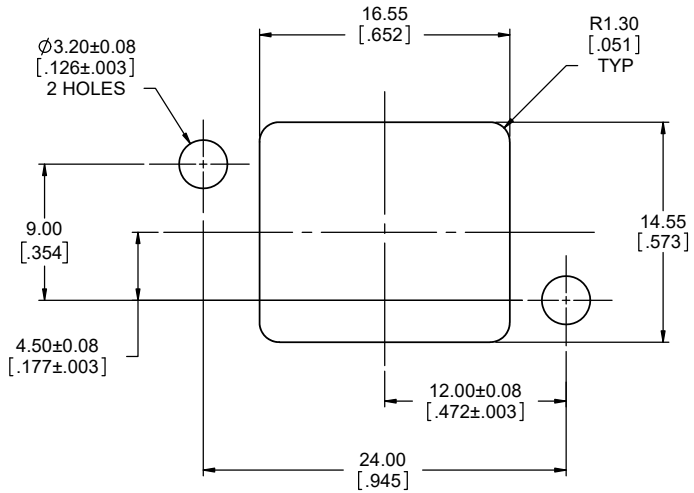

RECOMMENDED PANEL CUTOUT
OUTSIDE PANEL VIEW

LED SCHEMATIC
RED, GREEN, OR YELLOW

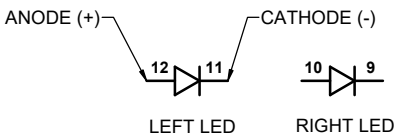

BI-COLOUR LED SCHEMATIC
LEFT OR RIGHT SIDE

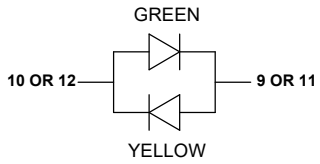

THIS DOCUMENT CONTAINS PROPRIETARY INFORMATION AND SUCH INFORMATION MAY NOT BE DISCLOSED TO OTHERS FOR ANY PURPOSE OR USED FOR MANUFACTURING PURPOSES WITHOUT WRITTEN PERMISSION FROM AMPHENOL CANADA CORP.

UNLESS SPECIFIED OTHERWISE	DRAWN	M. PAHULJE	MAR27/18
PRIMARY UNITS MILLIMETERS	CHECKED	K.LAMBIE	APR25/18
SECONDARY INCHES	M.E. APP'D		
REFERENCE IN PARENTHESES	Q.A. APP'D		
GENERAL TOLERANCES	DWG APPR.		
1 DECIMAL PLACE	ENG. REL. NO.	EAR 14655	
2 DECIMAL PLACES ±0.15	REF.		
3 DECIMAL PLACES	THIRD ANGLE PROJECTION	DO NOT SCALE DRAWING	
ANGULAR DEGREES			

Amphenol Canada Corp.
www.amphenolcanada.com

MRJR SERIES RUGGED CAT6A MODULAR JACK, 8 CONTACTS, VERTICAL, LED, THREAD, & TAIL LENGTH OPTIONS, EXTRA SHELL CLEARANCE, RoHS COMPLIANT

DWG. NO.	REV
P-MRJR-948X-XC	C

CODE ID NO.	DWG SIZE	SCALE	SHEET
03554	X	5:1	2 OF 2

Downloaded from Arrow.com.