TRACO POWER

Common Mode Choke

TCK-017

Order Code	TCK-017
Inductance (each winding)	497 µH ±25% (at 100 kHz / 20 mV)
Impedance (DCR)	100 mΩ max.
Rated Current	1.7 A max.
Rated Voltage	500 VDC max. (between windings)
Operating Temperature	-40°C to +105°C
RoHS Exemptions	No Exemptions
Overview Link	www.tracopower.com/overview/tck-017



Impedance Curve

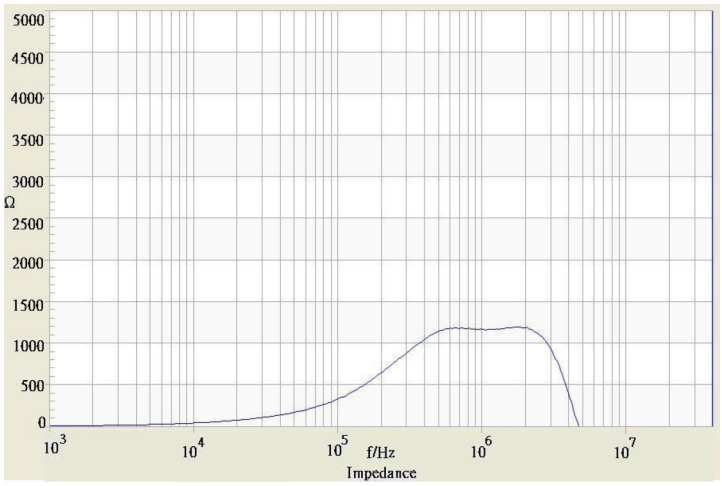

Outline Dimensions

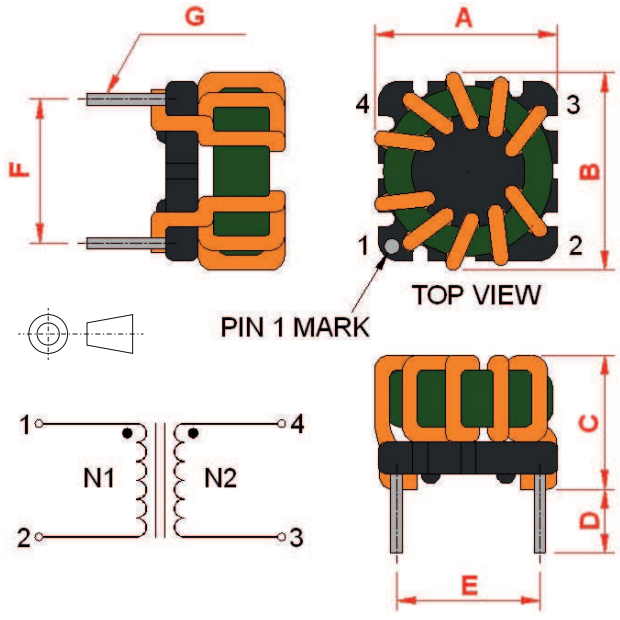

Dimensions [mm]	
A	11.5 max.
B	11.5 max.
C	8.8 max.
D	2.5 min.
E	7.62 ±0.2
F	7.62 ±0.2
G	ø 0.6 ±0.1

All specifications valid at +25°C, unless otherwise stated.

© Copyright 2026 Traco Electronic AG Specifications can be changed without notice.

Downloaded from Arrow.com.