POSITRONIC INDUSTRIES BELIEVES THE DATA ON THIS DRAWING TO BE RELIABLE, SINCE THE TECHNICAL INFORMATION IS GIVEN FREE OF CHARGE, THE USER EMPLOYS SUCH INFORMATION AT HIS OWN DISCRETION AND RISK. POSITRONIC INDUSTRIES ASSUMES NO RESPONSIBILITY FOR RESULTS OBTAINED OR DAMAGES INCURRED FROM USE OF SUCH INFORMATION IN WHOLE OR IN PART.

DATE	REV	REVISION RECORD	APP	DR	CK
5-18-05	NC	ECO 24111		YK	

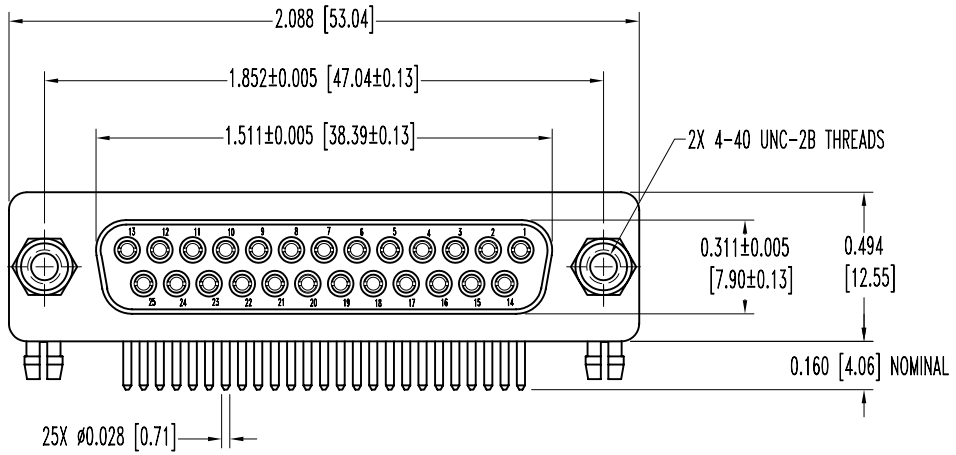

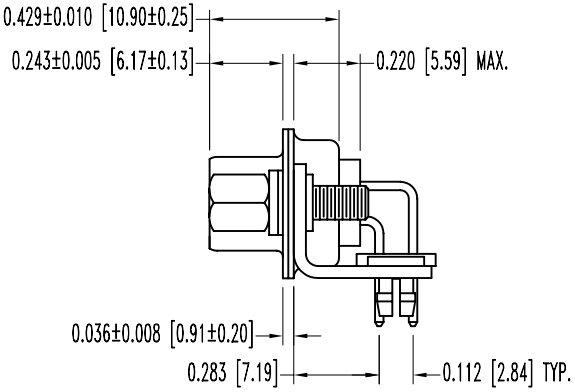

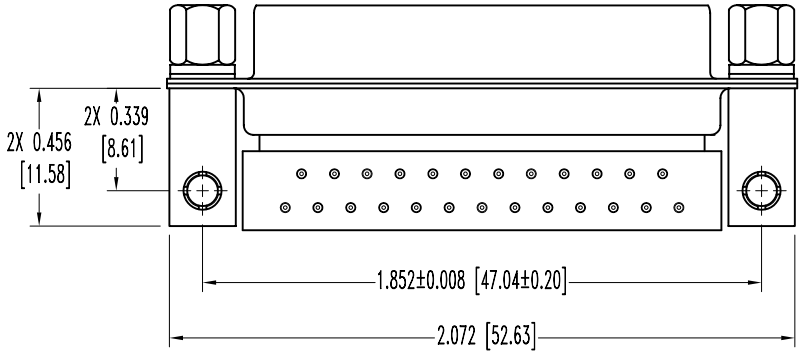

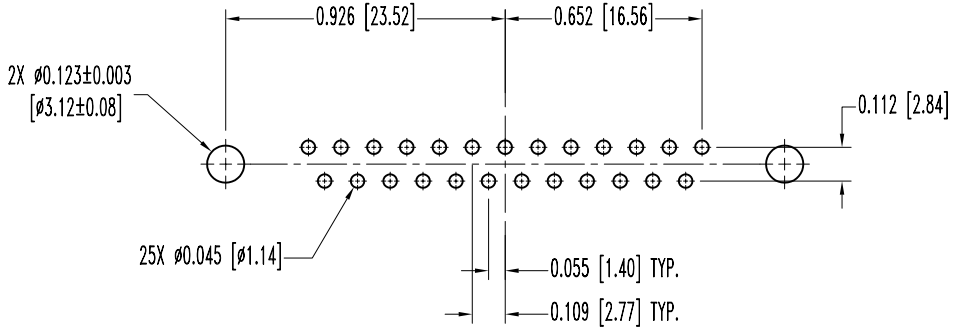

CONTACT HOLE PATTERN

NOTES:

1. MATERIALS AND FINISHES:
   - INSULATOR: GLASS FILLED DAP PER ASTM-D-5948 TYPE SDG-F, UL 94V-0, GREEN COLOR.
   - CONTACTS: PRECISION MACHINED HIGH TENSILE PHOSPHOR BRONZE WITH STAINLESS STEEL SHROUD, GOLD FLASH OVER NICKEL PLATE.
   - SHELLS: STEEL WITH TIN PLATE.
   - MOUNTING BRACKETS: BRASS WITH TIN PLATE OVER NICKEL.
   - ALIGNMENT BAR: GLASS FILLED NYLON, COLOR BLACK.
   - JACKSCREWS: STEEL, ZINC PLATE AND DICHROMATE SEAL.
   - PUSH-ON FASTENERS: BERYLLIUM COPPER WITH TIN PLATE.
   - WASHERS: STAINLESS STEEL, PASSIVATED.
2. ELECTRICAL CHARACTERISTICS:
   - CONTACT CURRENT RATING: 7.5 AMPERES NOMINAL.
   - INITIAL CONTACT RESISTANCE: 0.005 OHMS MAXIMUM.
   - INSULATOR RESISTANCE: 5 G OHMS.
   - WORKING VOLTAGE: 300 V r.m.s.
3. TEMPERATURE RANGE: -55°C TO +125°C.
4. DIMENSIONS ARE IN INCHES [MILLIMETERS].

POSITRONIC INDUSTRIES INC.
www.connectpositronic.com

DECIMAL TOL. ±0.015 [0.38]	HDC SERIES	SCALE N.T.S.	DRAWN BY YK / APPROVED BY
	TITLE: HDC25F5R7NT2X		
ANGULAR TOL. ±5°	DATE 5-18-05	DRAWING NUMBER SK6230	REV. NC

Downloaded from Arrow.com.