THIS DRAWING IS UNPUBLISHED. RELEASED FOR PUBLICATION -
© COPYRIGHT - - ALL RIGHTS RESERVED.

REVISIONS

P	LTR	DESCRIPTION	DATE	DWN	APVD
	A	NEW RELEASE	08APR2021	MK	BC

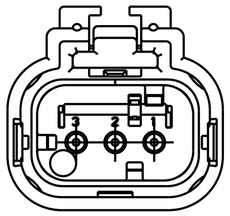

2320933-2
SCALE 2:1
KEY B

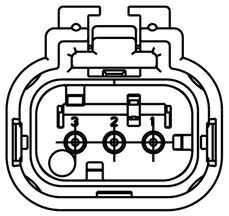

2320933-3
SCALE 2:1
KEY C

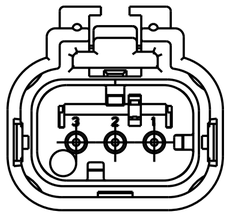

2320933-4
SCALE 2:1
KEY D

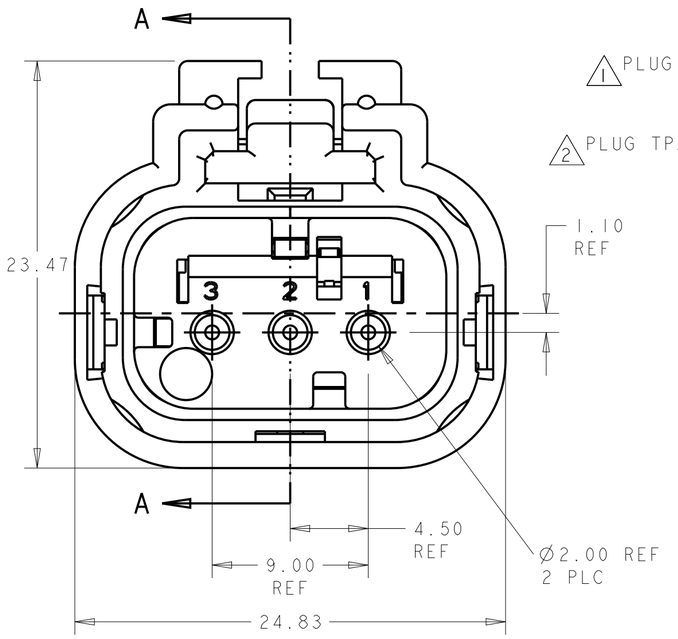

2320933-1 SHOWN
KEY A

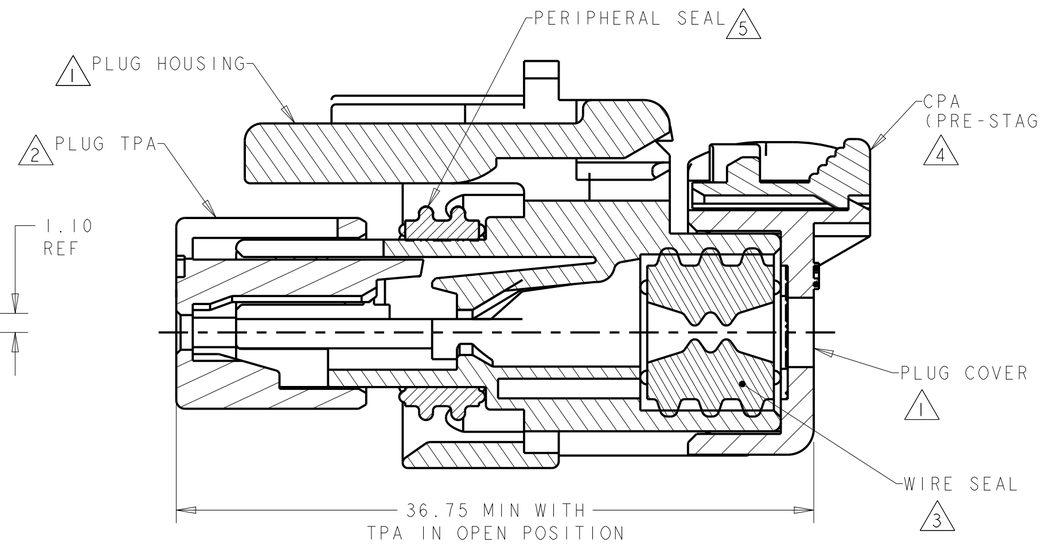

SECTION A-A

1. MATERIAL: 15% FIBERGLASS REINFORCED PBT
   COLOR: GRAY
2. MATERIAL: 15% FIBERGLASS REINFORCED PBT
   COLOR: (SEE TABLE)
3. MATERIAL: SILICONE
   COLOR: RUST
4. MATERIAL: 15% FIBERGLASS REINFORCED PBT
   COLOR: ORANGE
5. MATERIAL: SILICONE
   COLOR: TAN
6. RECOMMENDED WIRE DIAMETER RANGE IS 1.30 TO 2.54mm.
7. RECOMMENDED BACKSHELLS:

   STRAIGHT EXIT:
   - A. 2292798-1 SMOOTH WIRE EXIT
   - B. 2292798-2 NC12/NW10 CONDUIT WIRE EXIT
   - C. 2292798-3 NC08/NW7.5 CONDUIT WIRE EXIT

   90° EXIT:
   - D. 2302491-1 SMOOTH WIRE EXIT
   - E. 2302491-2 NC12/NW10 CONDUIT WIRE EXIT
   - F. 2302491-3 NC08/NW7.5 CONDUIT WIRE EXIT
8. RECOMMENDED SEAL PLUG: 776363-1
9. MATING CONNECTOR: 2320927-X.

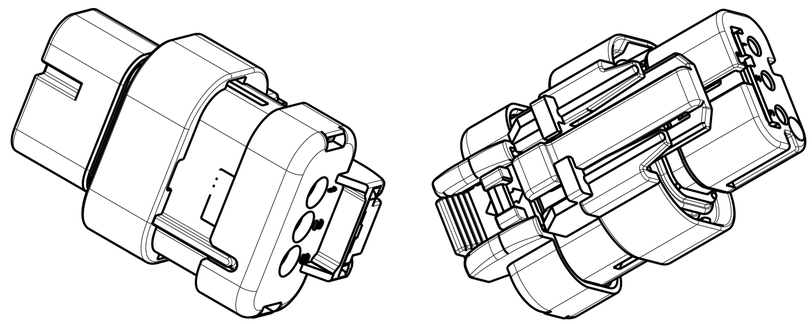

SCALE 2:1

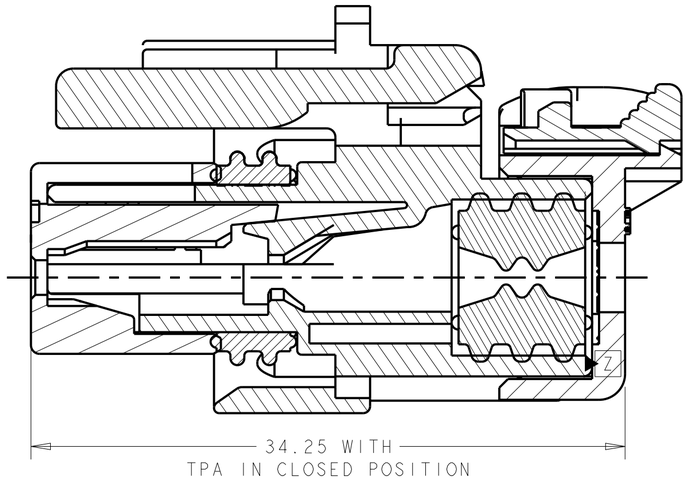

SECTION A-A

KEY	TPA COLOR	PART NUMBER
D	ORANGE	2320933-4
C	PURPLE	2320933-3
B	BLUE	2320933-2
A	TAN	2320933-1

THIS DRAWING IS A CONTROLLED DOCUMENT.

DIMENSIONS: mm

TOLERANCES UNLESS OTHERWISE SPECIFIED:
0 PLC ±-
1 PLC ±-
2 PLC ±0.30
3 PLC ±-
4 PLC ±-
ANGLES ±1°

MATERIAL -
FINISH -

DWN J MCNEAL 07FEB2018
CHK R BALTER 07FEB2018
APVD R BALTER 07FEB2018
PRODUCT SPEC 108-32602
APPLICATION SPEC 114-32362
WEIGHT 8g

TE Connectivity

NAME PLUG ASSEMBLY, 3 POSITION, REDUCED DIA SEAL, HIGH TEMP, AMPSEAL 16

SIZE A2 | CAGE CODE - | DRAWING NO C-2320933 | RESTRICTED TO -

CUSTOMER DRAWING | SCALE 4:1 | SHEET 1 OF 1 | REV A

1471-9 (3/13)

Downloaded from Arrow.com.