DIMENSIONS

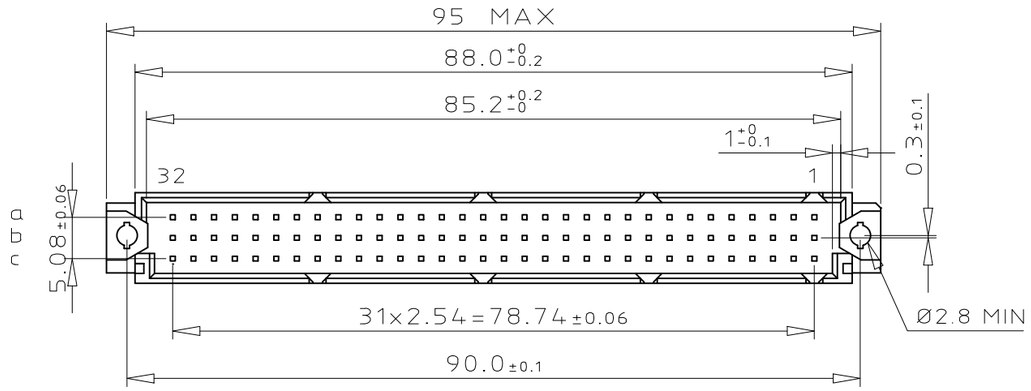

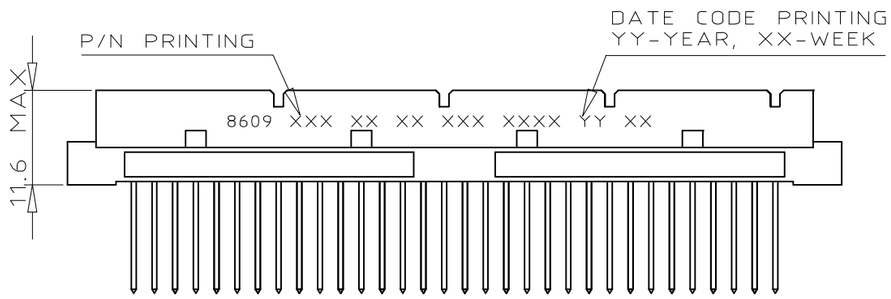

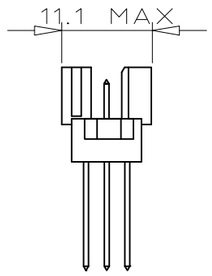

TERMINATION

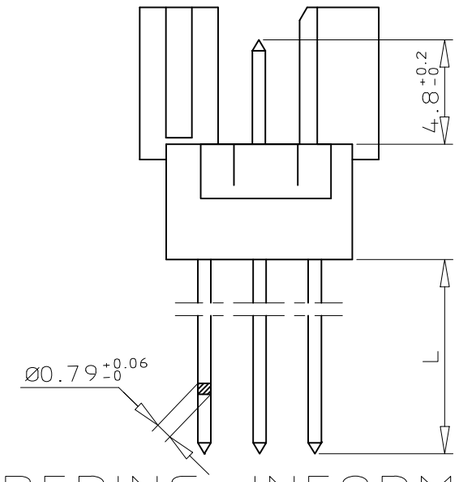

PCB LAYOUT

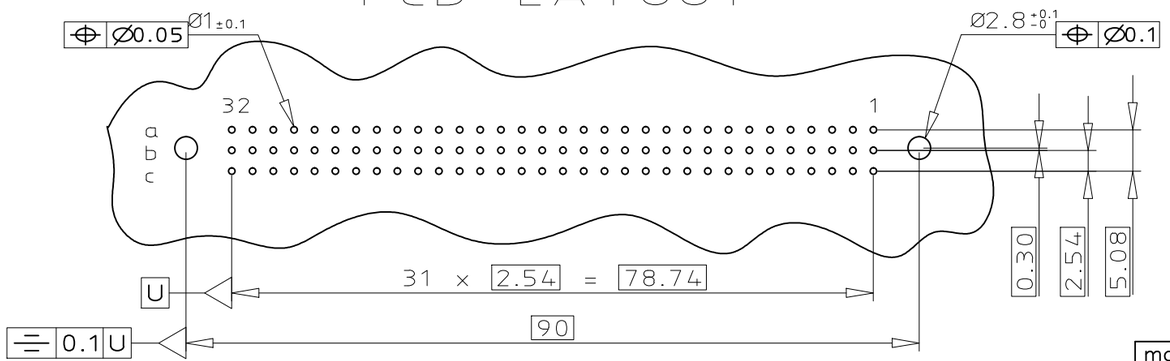

ORDERING INFORMATION

SERIES	8609	3	96	7	8	15	7	4	5	ELF

ROWS FITTED WITH CONTACTS
- ROW a - - — 1 — 32
- ROW a b c — 3 — 96
- ROW a - c — 4 — 64
- ROW a - c — 4 — 32

NO. OF CONTACTS

TYPE OF INSULATOR
- 3 ROW MALE INSULATOR — 7

METHOD OF MOUNTING
- REVERSE MOUNTING - STYLE R — 8

TERMINATION STYLE
- WIRE WRAP L=13.1 +0.5 −0.2 — 15
- WIRE WRAP L=18.2 +0.5 −0.2 — 25

OPTIONS
- NO OPTION — 7

PERFORMANCE CLASS
- DIN 41612 CLASS 3 — 4
- DIN 41612 CLASS 2 — 5
- DIN 41612 CLASS 1 — 6
- AS PER MIL C 55302 / JSS 50808 — 8

PITCH PER ROW
- 2.54 mm — 5
- 5.08 mm — 8

LEAD FREE VERSION — ELF

mat'l. code	surface	tolerance	projection	product family
SEE DWG C-8609-0000A	ISO 1302	ISO 406 ISO 1101		8609

tolerances unless otherwise specified: angles 0°±2°; linear 0.X ±0.1, 0.XX ±0.1, 0.XXX ±0.1

mm

scale 3:2

title: DIN REVERSE HEADER

ltr	ecn no	dr	date
A	104-0063	MINI	2004-09-17
B	105-0089	MINI	2005-05-19
C	105-0174	MINI	2005-09-27
D	106-0061	MINI	2006-05-31
E	108-0146	KR	2008-10-21
F	109-0200	KR	2009-09-22
G	110-0234	SAL	2010-12-04

dr	MINI K V	2004-09-17
engr	RAKHEE G	2004-09-17
chr	S ALOSIUS	2010-12-04
appd	S ALOSIUS	2010-12-04

dwg no C-8609-2005 — sheet 1 of 1 — size A3

type Product Customer Drawing

sheet index — revision G — sheet 1

GENERAL CHARACTERISTICS & RoHS INFO

REFER DRAWING C-8609-0000A

FCIconnect.com
Copyright FCI

form: A3

Downloaded from Arrow.com.

PDM: Rev:G STATUS: Released Printed: May 14, 2011