⑤

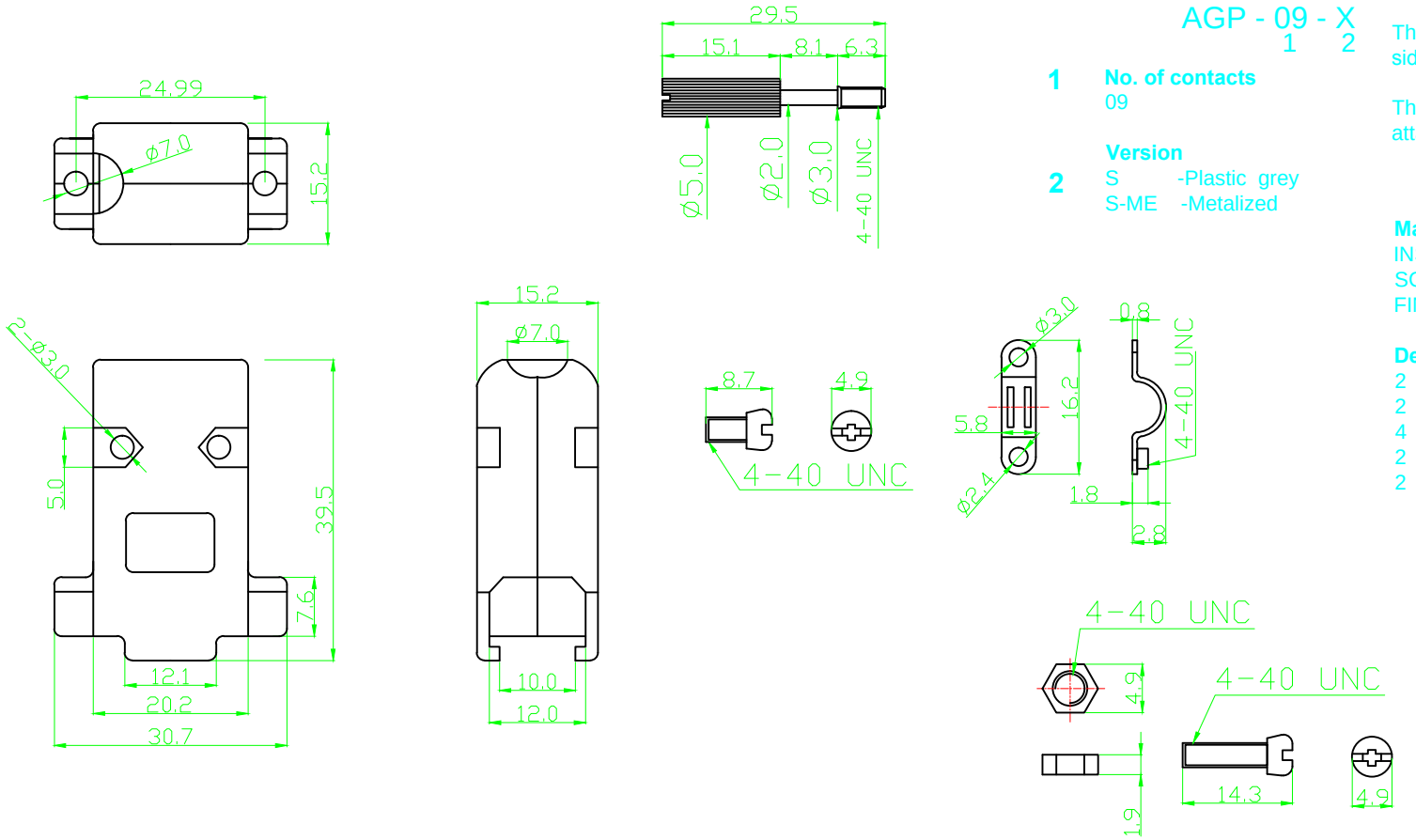

Order Code

AGP - 09 - X
1 2

1 No. of contacts
09

2 Version
S -Plastic grey
S-ME -Metalized

SPECIFICATION
Material Features

This shell hood is supplied with side entry(45°):

The strain relief with two screw is attached separately.

Material
INSULATOR : ABS UL94HB
SCREW: STEEL
FINISHED: CHROMATE PLATED

Delivery includes
2 half-sheels
2 knurledge screws (short)
4 screws
2 strain relief bow
2 nuts

RoHS compliant
Unit: mm

Scale	free
TOLERANCE	
X.	±0.5
X.X	±0.3
X.XX	±0.2
DIM	TOL
Angle	±5°

Id.	Modification	Date	Name
⑤	Update & Add 15/37/50 pol	16.10.2019	Carson
④	Update	04.03.2011	N.Schulz
③	Modify drawing	24.12.2009	Dean
②	ASSMANN Nr. vergeben	02.07.2007	N.Schulz
①	Drawn	12.01.2005	Ken

	Date	Name
Drawn	12.01.2005	Ken
Approved	16.10.2019	Carson

ASSMANN WSW components

Customer-No.

ASSMANN WSW-No.
AGP 09 x

Drawing-No.
ASS 0155 CO

rev05

Replace

Sheet 1/5

Downloaded from Arrow.com.

⑤

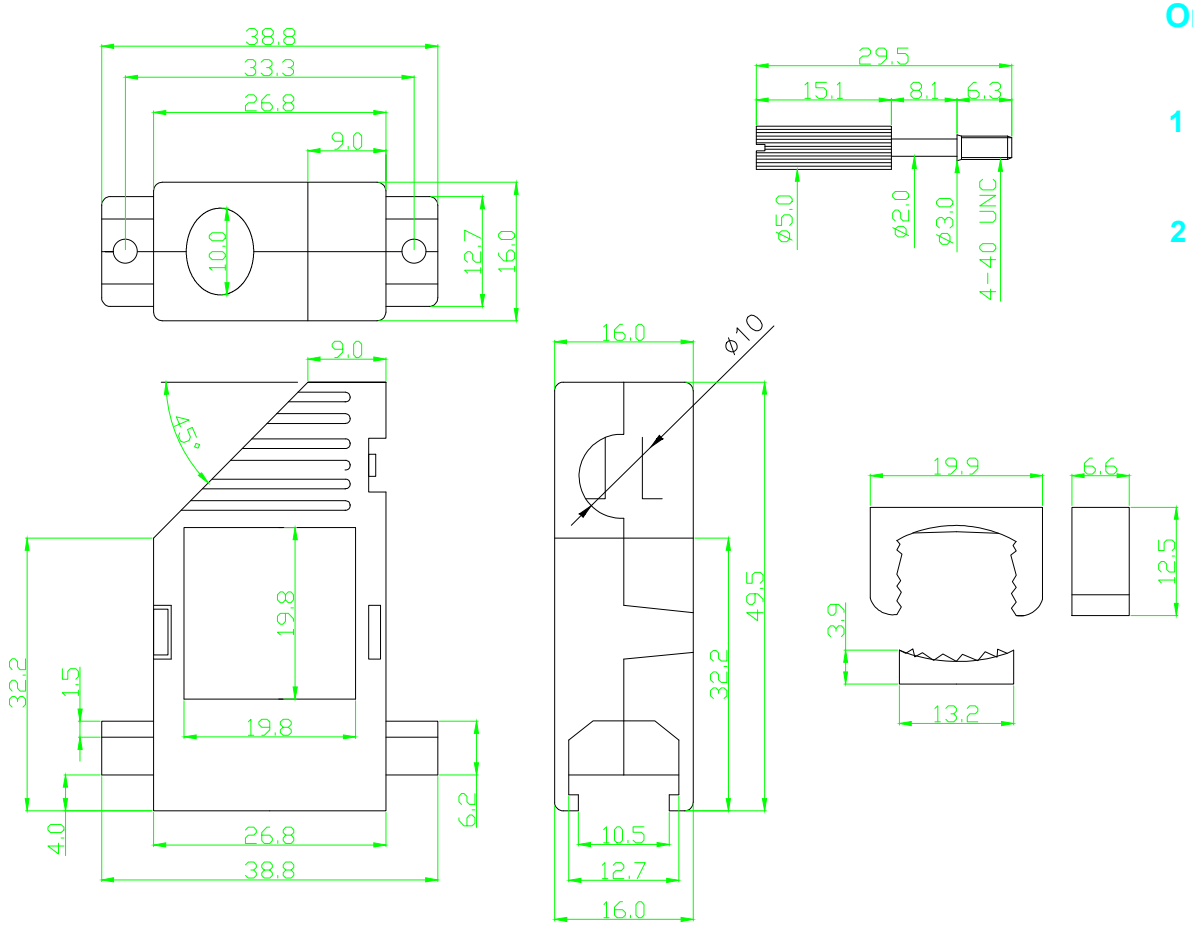

Order Code

AGP - 15 - X
1 2

1 **No. of contacts**
15

2 **Version**
S -Plastic grey
S-ME -Metalized

SPECIFICATION
Material Features

This shell hood is supplied with side entry(45°):

The strain relief with two screw is attached separately.

Material
INSULATOR : ABS UL94HB
SCREW: STEEL
FINISHED: CHROMATE PLATED

Delivery includes
2 half-sheels
2 knurledge screws (short)
4 screws
2 strain relief bow
2 nuts

RoHS compliant
Unit: mm

Scale	free
TOLERANCE	
X.	±0.5
X.X	±0.3
X.XX	±0.2
DIM	TOL
Angle	±5°

Id.	Modification	Date	Name
⑤	Update & Add 15/37/50 pol	16.10.2019	Carson
④	Update	04.03.2011	N.Schulz
③	Modify drawing	24.12.2009	Dean
②	ASSMANN Nr. vergeben	02.07.2007	N.Schulz
①	Drawn	12.01.2005	Ken

	Date	Name
Drawn	12.01.2005	Ken
Approved	16.10.2019	Carson

ASSMANN WSW components

Customer-No.

ASSMANN WSW-No.
AGP 15 x

Drawing-No.
ASS 0155 CO

rev05

Replace

Sheet 2/5

Downloaded from Arrow.com.

⑤

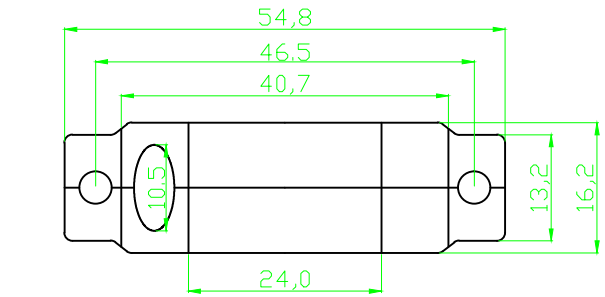

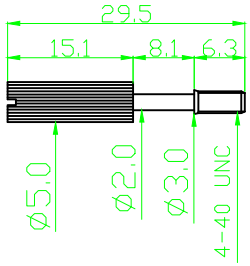

Order Code

AGP - 25 - X
1 2

1 **No. of contacts**
25

2 **Version**
S -Plastic grey
S-ME -Metalized

SPECIFICATION
Material Features

This shell hood is supplied with side entry(45°):

The strain relief with two screw is attached separately.

Material
INSULATOR : ABS UL94HB
SCREW: STEEL
FINISHED: CHROMATE PLATED

Delivery includes
2 half-sheels
2 knurledge screws (short)
4 screws
2 strain relief bow
2 nuts

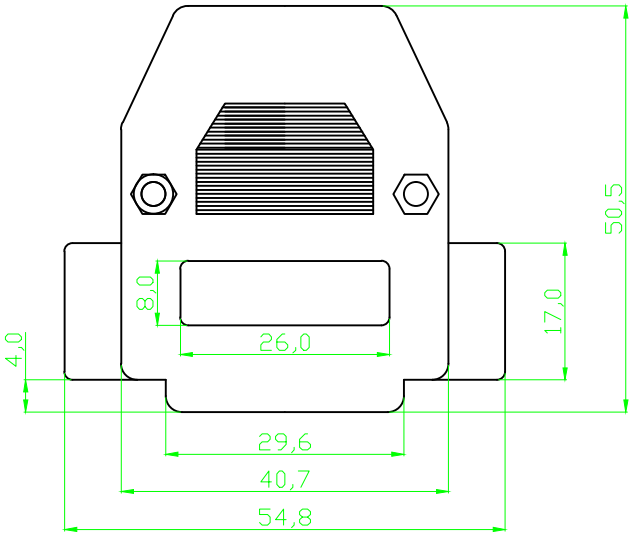

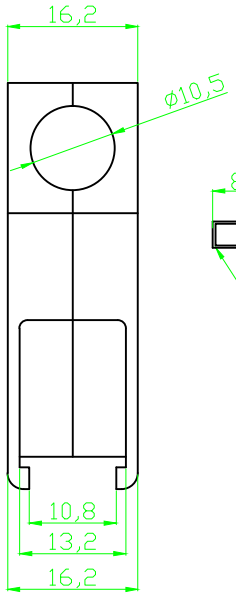

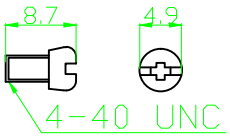

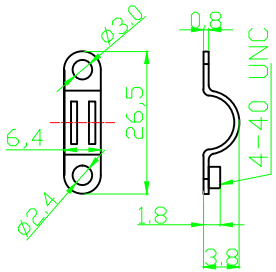

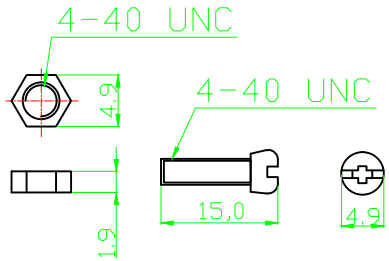

RoHS compliant
Unit: mm

Scale	free
TOLERANCE	
X.	±0.5
X.X	±0.3
X.XX	±0.2
DIM	TOL
Angle	±5°

Id.	Modification	Date	Name		Date	Name
⑤	Update & Add 15/37/50 pol	16.10.2019	Carson	Drawn	12.01.2005	Ken
④	Update	04.03.2011	N.Schulz	Approved	16.10.2019	Carson
③	Modify drawing	24.12.2009	Dean			
②	ASSMANN Nr. vergeben	02.07.2007	N.Schulz			
①	Drawn	12.01.2005	Ken			

ASSMANN WSW components

Customer-No.

ASSMANN WSW-No.
AGP 25 x

Drawing-No.
ASS 0155 CO

rev05

Replace

Sheet 3/5

Downloaded from Arrow.com.

⑤

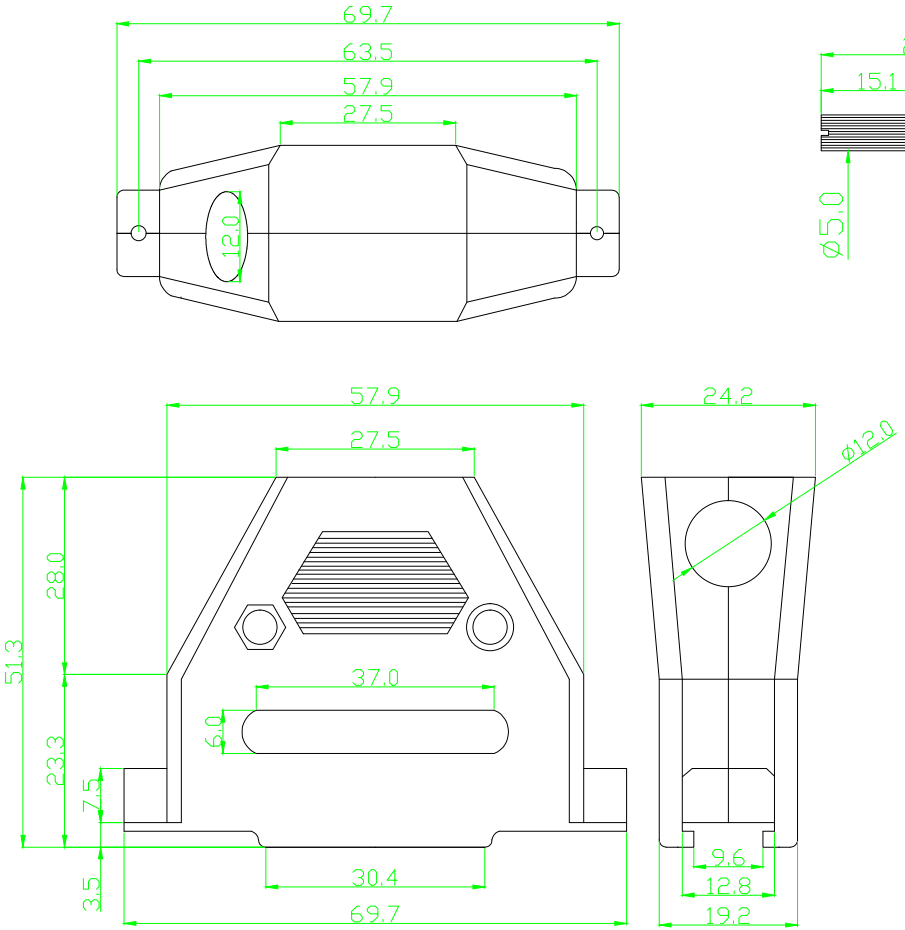

Order Code

AGP - 37 - X
1 2

1 **No. of contacts**
37

Version
2 S -Plastic grey
S-ME -Metalized

SPECIFICATION
Material Features

This shell hood is supplied with side entry(45°):

The strain relief with two screw is attached separately.

Material
INSULATOR : ABS UL94HB
SCREW: STEEL
FINISHED: CHROMATE PLATED

Delivery includes
2 half-sheels
2 knurledge screws (short)
4 screws
2 strain relief bow
2 nuts

RoHS compliant

Unit: mm

Scale	free
TOLERANCE	
X.	±0.5
X.X	±0.3
X.XX	±0.2
DIM	TOL
Angle	±5°

Id.	Modification	Date	Name
⑤	Update & Add 15/37/50 pol	16.10.2019	Carson
④	Update	04.03.2011	N.Schulz
③	Modify drawing	24.12.2009	Dean
②	ASSMANN Nr. vergeben	02.07.2007	N.Schulz
①	Drawn	12.01.2005	Ken

	Date	Name
Drawn	12.01.2005	Ken
Approved	16.10.2019	Carson

ASSMANN WSW components

Customer-No.

ASSMANN WSW-No.
AGP 37 x

Drawing-No.
ASS 0155 CO

rev05

Replace

Sheet 4/5

Downloaded from Arrow.com.

⑤

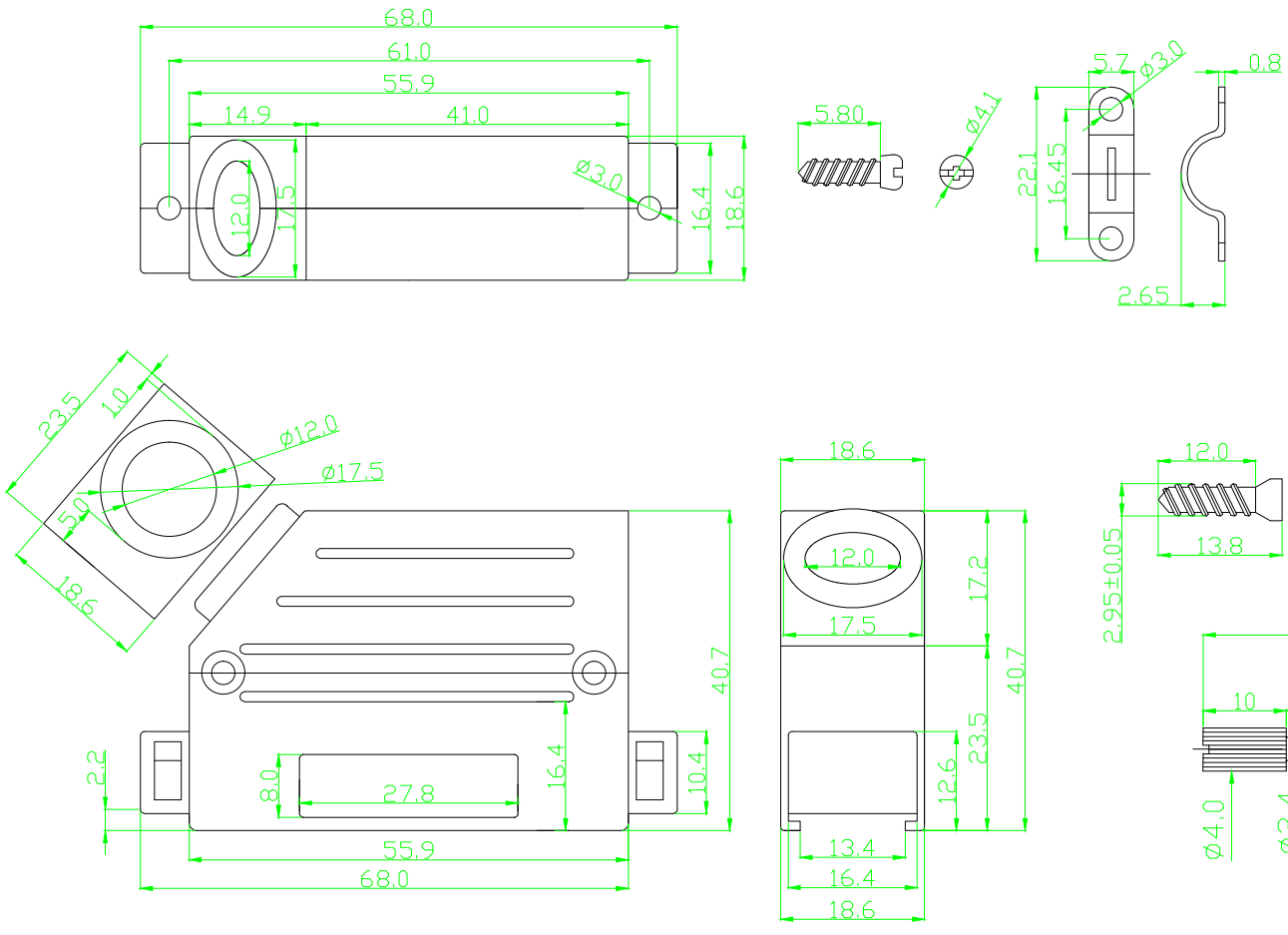

Order Code

AGP - 50 - X
1 2

1 No. of contacts
50

2 Version
S -Plastic grey
S-ME -Metalized

SPECIFICATION
Material Features

This shell hood is supplied with side entry(45°):

The strain relief with two screw is attached separately.

Material
INSULATOR : ABS UL94HB
SCREW: STEEL
FINISHED: CHROMATE PLATED

Delivery includes
2 half-sheels
2 knurledge screws (short)
4 screws
2 strain relief bow
2 nuts

RoHS compliant
Unit: mm

Scale	free
TOLERANCE	
X.	±0.5
X.X	±0.3
X.XX	±0.2
DIM	TOL
Angle	±5°

Id.	Modification	Date	Name
⑤	Update & Add 15/37/50 pol	16.10.2019	Carson
④	Update	04.03.2011	N.Schulz
③	Modify drawing	24.12.2009	Dean
②	ASSMANN Nr. vergeben	02.07.2007	N.Schulz
①	Drawn	12.01.2005	Ken

	Date	Name
Drawn	12.01.2005	Ken
Approved	16.10.2019	Carson

ASSMANN WSW components

Customer-No.

ASSMANN WSW-No.
AGP 50 x

Drawing-No.
ASS 0155 CO

rev05

Replace

Sheet 5/5

Downloaded from Arrow.com.