Metallized Polypropylene Film EMI Suppression Capacitors - F881, Class Y2, 300 VAC

Overview

The F881 Series is constructed of metallized polypropylene film encapsulated with self-extinguishing resin in a box of material meeting the requirements of UL 94 V–0.

Applications

For worldwide use as electromagnetic interference (EMI) suppression in all "line to earth" applications requiring Y2 safety classification.

Benefits

- Approvals: ENEC, UL, cUL, CQC
- Rated voltage: 300 VAC 50/60 Hz
- Capacitance range: 0.001 – 1.0 µF
- Lead spacing: 7.5 – 37.5 mm
- Capacitance tolerance: ±20%, ±10%
- Climatic category: 40/110/56, IEC 60068–1
- Tape & Reel in accordance with IEC 60286–2
- RoHS Compliant and lead-free terminations
- Operating temperature range of -40°C to +110°C
- 100% screening factory test at 4,000 VDC and 2,500 VAC

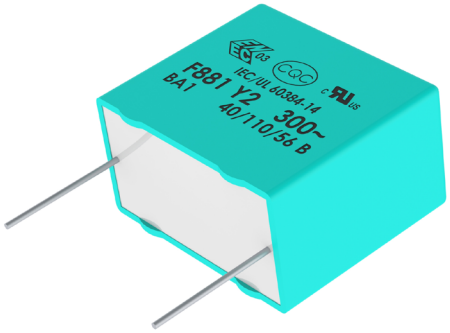

Part Number System

F	881	B	C	103	M	300	C	V272
Capacitor Class	Series	Lead Spacing (mm)	Size Code	Capacitance Code (pF)	Capacitance Tolerance	Voltage (VAC)	Packaging	C-Spec
F = Film	Y2, Metallized Polypropylene	K = 7.5(with C-Spec) A = 10(with C-Spec) B = 15 D = 22.5 F = 27.5 R = 37.5	See Dimension Table	First two digits represent significant figures. Third digit specifies number of zeros.	K = ±10% M = ±20%	300	See Ordering Options Table	Only valid for pitch K=7.5 and A=10

Downloaded from Arrow.com.

Ordering Options Table

Lead Spacing Nominal (mm)	Type of Leads and Packaging	Lead Length (mm)	Lead and Packaging Code
7.5	**Standard Lead and Packaging Options**		
	Bulk (Bag) – Short Leads	4+2/-0	C
	Bulk (Bag) – Long Leads	17+0/-1	A
	Tape & Reel (Standard Reel)	H_0= 18.5±0.5	L
	Other Lead and Packaging Options		
	Bulk (Bag) – Maximum Length Leads	20+5/-0	ALL0L
	Ammo Pack	H_0= 18.5±0.5	R
10	**Standard Lead and Packaging Options**		
	Bulk (Bag) – Short Leads	4+2/-0	C
	Bulk (Bag) – Long Leads	17+0/-1	A
	Tape & Reel (Standard Reel)	H_0= 18.5±0.5	L
	Other Lead and Packaging Options		
	Bulk (Bag) – Maximum Length Leads	20+5/-0	ALL0L
	Ammo Pack	H_0= 18.5±0.5	R
	Tape & Reel (Large Reel)	H_0= 18.5±0.5	P
15	**Standard Lead and Packaging Options**		
	Bulk (Bag) – Short Leads	4+2/-0	C
	Bulk (Bag) – Long Leads	17+0/-1	A
	Tape & Reel (Standard Reel)	H_0= 18.5±0.5	L
	Pizza Pack	4+2/-0	Z
	Other Lead and Packaging Options		
	Bulk (Bag) – Maximum Length Leads	25+5/-0	ALR0L
	Ammo Pack	H_0= 18.5±0.5	R
	Tape & Reel (Large Reel)	H_0= 18.5±0.5	P
22.5	**Standard Lead and Packaging Options**		
	Pizza – Long Leads	17+0/-1	ZLH0J
	Pizza Pack	4+2/-0	Z
	Other Lead and Packaging Options		
	Tape & Reel (Standard Reel)	H_0= 18.5±0.5	L
	Tape & Reel (Large Reel)	H_0= 18.5±0.5	P
	Ammo Pack	H_0= 18.5±0.5	R
27.5	**Standard Lead and Packaging Options**		
	Pizza – Long Leads	17+0/-1	ZLH0J
	Pizza Pack	4+2/-0	Z
37.5	**Standard Lead and Packaging Options**		
	Pizza – Long Leads	17+0/-1	ZLH0J
	Pizza Pack	4+2/-0	Z

Downloaded from Arrow.com.

Dimensions – Millimeters

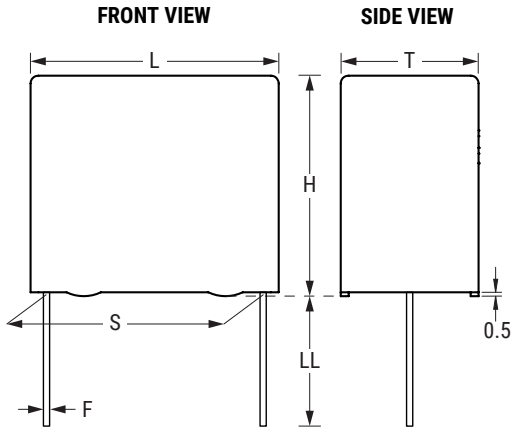

Size Code	Version	S		T		H		L		F	
		Nominal	Tolerance	Nominal	Tolerance	Nominal	Tolerance	Nominal	Tolerance	Nominal	Tolerance
KF		7.5	±0.4	3	+0/-0.5	8	+0/-0.5	10	+0/-0.5	0.6	±0.05
KG		7.5	±0.4	4	+0/-0.5	8	+0/-0.5	10	+0/-0.5	0.6	±0.05
KH		7.5	±0.4	4	+0/-0.5	9	+0/-0.5	10	+0/-0.5	0.6	±0.05
KJ		7.5	±0.4	5	+0/-0.5	10.5	+0/-0.5	10	+0/-0.5	0.6	±0.05
KM		7.5	±0.4	6	+0/-0.5	12	+0/-0.5	10.5	+0/-0.5	0.6	±0.05
AG		10.0	±0.4	4.0	+0/-0.5	9.0	+0/-0.5	13.0	+0/-0.5	0.6	±0.05
AK		10.0	±0.4	5.0	+0/-0.5	11.0	+0/-0.5	13.0	+0/-0.5	0.6	±0.05
AP		10.0	±0.4	6.0	+0/-0.5	12.0	+0/-0.5	13.0	+0/-0.5	0.6	±0.05
AO		10.0	±0.4	7.0	+0/-0.5	17.0	+0/-0.5	13.0	+0/-0.5	0.6	±0.05
AL	Low Profile	10.0	±0.4	9.5	+0/-0.5	7.5	+0/-0.5	13.0	+0/-0.5	0.6	±0.05
AE	Special Version	10.0	±0.4	4.0	+0/-0.5	8.0	+0/-0.5	13.0	+0/-0.5	0.6	±0.05
BB		15.0	±0.4	4.0	+0/-0.5	10.0	+0/-0.5	18.0	+0/-0.5	0.8	±0.05
BC		15.0	±0.4	5.0	+0/-0.5	11.0	+0/-0.5	18.0	+0/-0.5	0.8	±0.05
BE		15.0	±0.4	5.5	+0/-0.5	12.5	+0/-0.5	18.0	+0/-0.5	0.8	±0.05
BG		15.0	±0.4	6.0	+0/-0.5	12.0	+0/-0.5	18.0	+0/-0.5	0.8	±0.05
BI	High Profile	15.0	±0.4	6.0	+0/-0.5	17.5	+0/-0.5	18.0	+0/-0.5	0.8	±0.05
BK		15.0	±0.4	7.5	+0/-0.5	13.5	+0/-0.5	18.0	+0/-0.5	0.8	±0.05
BO	High Profile	15.0	±0.4	7.5	+0/-0.5	18.5	+0/-0.5	18.0	+0/-0.5	0.8	±0.05
BP		15.0	±0.4	8.5	+0/-0.5	14.5	+0/-0.5	18.0	+0/-0.5	0.8	±0.05
BT		15.0	±0.4	9.0	+0/-0.5	12.5	+0/-0.5	18.0	+0/-0.5	0.8	±0.05
BS		15.0	±0.4	10.0	+0/-0.5	16.0	+0/-0.5	18.0	+0/-0.5	0.8	±0.05
BY		15.0	±0.4	11.0	+0/-0.5	19.0	+0/-0.5	18.0	+0/-0.5	0.8	±0.05
BZ	Special Version	15.0	±0.4	12.0	+0/-0.5	20.0	+0/-0.5	18.0	+0/-0.5	0.8	±0.05
BR	Low Profile	15.0	±0.4	13.0	+0/-0.5	12.0	+0/-0.5	18.0	+0/-0.5	0.8	±0.05
DB		22.5	±0.4	6.0	+0/-0.5	14.5	+0/-0.5	26.0	+0/-0.5	0.8	±0.05
DI		22.5	±0.4	7.0	+0/-0.5	16.0	+0/-0.5	26.0	+0/-0.5	0.8	±0.05
DH		22.5	±0.4	8.0	+0/-0.5	16.0	+0/-0.5	26.0	+0/-0.5	0.8	±0.05
DJ		22.5	±0.4	8.5	+0/-0.5	17.0	+0/-0.5	26.0	+0/-0.5	0.8	±0.05

Note: See Ordering Options Table for lead length (LL) options.

Downloaded from Arrow.com.

Dimensions – Millimeters cont.

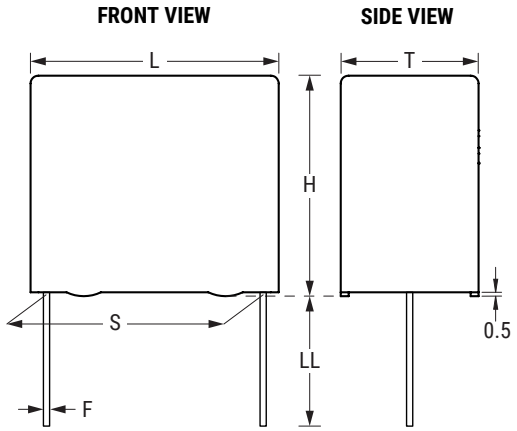

Size Code	Version	S		T		H		L		F	
		Nominal	Tolerance	Nominal	Tolerance	Nominal	Tolerance	Nominal	Tolerance	Nominal	Tolerance
DM		22.5	±0.4	9.0	+0/-0.5	18.5	+0/-0.5	26.0	+0/-0.5	0.8	±0.05
DO		22.5	±0.4	10.0	+0/-0.5	18.5	+0/-0.5	26.0	+0/-0.5	0.8	±0.05
DP		22.5	±0.4	11.0	+0/-0.5	20.0	+0/-0.5	26.0	+0/-0.5	0.8	±0.05
DU		22.5	±0.4	13.0	+0/-0.5	22.0	+0/-0.5	26.0	+0/-0.5	0.8	±0.05
DY		22.5	±0.4	15.5	+0/-0.5	24.5	+0/-0.5	26.0	+0/-0.5	0.8	±0.05
FB		27.5	±0.4	9.0	+0/-0.7	17.0	+0/-0.7	31.5	+0/-0.7	0.8	±0.05
FC		27.5	±0.4	11.0	+0/-0.7	20.0	+0/-0.7	31.5	+0/-0.7	0.8	±0.05
FI		27.5	±0.4	13.0	+0/-0.7	25.0	+0/-0.7	31.5	+0/-0.7	0.8	±0.05
FN		27.5	±0.4	14.0	+0/-0.7	28.0	+0/-0.7	31.5	+0/-0.7	0.8	±0.05
FO	High Profile	27.5	±0.4	17.0	+0/-0.7	40.0	+0/-0.7	31.5	+0/-0.7	0.8	±0.05
FR		27.5	±0.4	17.5	+0/-0.7	28.0	+0/-0.7	31.5	+0/-0.7	0.8	±0.05
FS		27.5	±0.4	19.0	+0/-0.7	29.0	+0/-0.7	31.5	+0/-0.7	0.8	±0.05
FY		27.5	±0.4	22.0	+0/-0.7	37.0	+0/-0.7	31.5	+0/-0.7	0.8	±0.05
FH	Low Profile	27.5	±0.4	21.0	+0/-0.7	12.5	+0/-0.7	31.5	+0/-0.7	0.8	±0.05
FQ	Low Profile	27.5	±0.4	27.5	+0/-0.7	16.0	+0/-0.7	31.5	+0/-0.7	0.8	±0.05
FT	Low Profile	27.5	±0.4	31.0	+0/-0.7	19.0	+0/-0.7	31.5	+0/-0.7	0.8	±0.05
RB		37.5	±0.4	11.0	+0/-0.7	22.0	+0/-0.7	41.0	+0/-0.7	1.0	±0.05
RF		37.5	±0.4	13.0	+0/-0.7	24.0	+0/-0.7	41.0	+0/-0.7	1.0	±0.05
RH		37.5	±0.4	15.0	+0/-0.7	26.0	+0/-0.7	41.0	+0/-0.7	1.0	±0.05
RC		37.5	±0.4	16.0	+0/-0.7	28.5	+0/-0.7	41.0	+0/-0.7	1.0	±0.05
RD		37.5	±0.4	19.0	+0/-0.7	32.0	+0/-0.7	41.0	+0/-0.7	1.0	±0.05
RP		37.5	±0.4	21.0	+0/-0.7	38.0	+0/-0.7	41.0	+0/-0.7	1.0	±0.05
RO		37.5	±0.4	24.0	+0/-0.7	44.0	+0/-0.7	41.0	+0/-0.7	1.0	±0.05
RU		37.5	±0.4	30.0	+0/-0.7	45.0	+0/-0.7	41.0	+0/-0.7	1.0	±0.05
RV	Low Profile	37.5	±0.4	24.0	+0/-0.7	15.0	+0/-0.7	41.0	+0/-0.7	1.0	±0.05
RW	Low Profile	37.5	±0.4	24.0	+0/-0.7	19.0	+0/-0.7	41.0	+0/-0.7	1.0	±0.05

Note: See Ordering Options Table for lead length (LL) options.

Downloaded from Arrow.com.

Performance Characteristics

Rated Voltage	300 VAC 50/60 Hz
Capacitance Range	0.001 – 1.0 µF
Capacitance Tolerance	±20%, ±10%
Operating Temperature Range	−40°C to +110°C
Rated Temperature	+110°C
Climatic Category	40/110/56
Storage Conditions	Storage time: ≤ 24 months from the date marked on the label package Average relative humidity per year ≤ 70% RH ≤ 85% for 30 days randomly distributed throughout the year Dew is absent Temperature: -40 to 80°C (see "Maximum Humidity in Storage Conditions" graph below)
Approvals	ENEC, UL, cUL, CQC

Dissipation Factor	Maximum Values at +23°C			
	1kHz	V272 Pitch =7.5mm and 10 mm	Pitch = 15 mm	Pitch >15 mm
		0.8%	0.3%	0.2%

Test Voltage Between Terminals	The 100% screening factory test is carried out at 4,000 VDC and 2,500 VAC. The voltage level is selected to meet the requirements in applicable equipment standards. All electrical characteristics are checked after the test. It's not permitted to repeat this Test as there is a risk to damage the Capacitor. KEMET is not liable in such case for any failures

Insulation Resistance	Measured at +25°C ±5°C, according to IEC 60384-2			
	Minimum Values Between Terminals			
	Voltage Charge	Voltage Charge time	C ≤ 0.33 µF	C > 0.33 µF
	100 VDC	1 minute	≥ 3 • 10⁴ MΩ	≥ 10,000 MΩ • µF

In DC Applications	Recommended voltage ≤ 1000 VDC

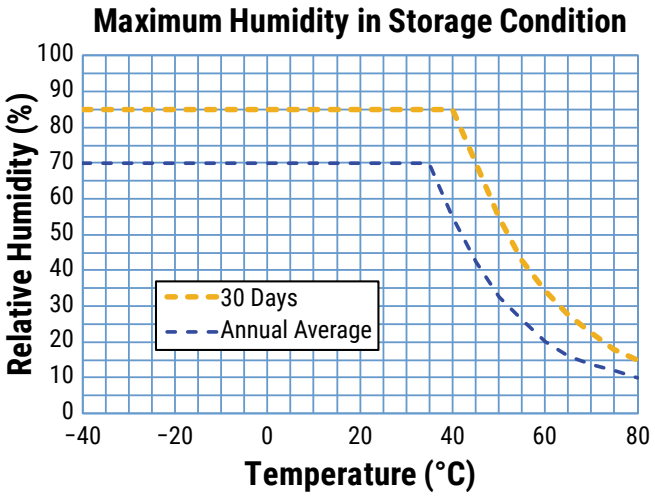

Downloaded from Arrow.com.

Impedance Graph

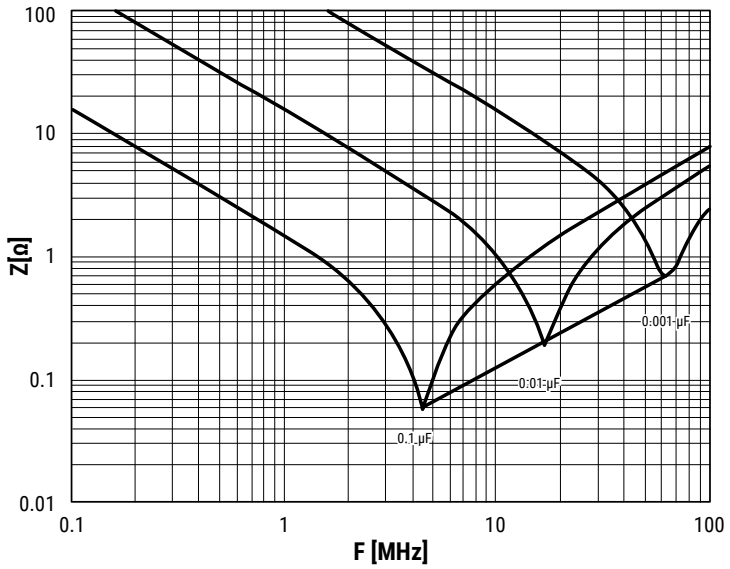

Environmental Test Data

Test	IEC Publication	Procedure
Endurance	IEC 60384–14	1.7 x V_R VAC 50 Hz, once every hour increase to 1,000 VAC for 0.1 second, 1,000 hours at upper rated temperature
Vibration	IEC 60068–2–6 Test Fc	3 directions at 2 hours each 10 – 55 Hz at 0.75 mm or 98 m/s^2
Bump	IEC 60068–2–29 Test Eb	1,000 bumps at 390 m/s^2
Change of Temperature	IEC 60068–2–14 Test Na	Upper and lower rated temperature 5 cycles
Active Flammability	IEC 60384–14	V_R + 20 surge pulses at 5 kV (pulse every 5 seconds)
Passive Flammability	IEC 60384–14	IEC 60384–1, IEC 60695–11–5 Needle-flame test
Damp Heat Steady State	IEC 60068-2-78 Test Cab	+40°C and 93% R.H., 56 days
Biased Humidity	IEC 60384-14:2023 Edition 5	+40°C and 93% R.H., Rated Voltage, 21 days

Downloaded from Arrow.com.

Approvals

Certification Body	Mark	Specification	File Number
IMQ S.p.A.		EN/IEC 60384–14	CA08.00185
UL		UL 60384–14 and CAN/CSA–E60384–14	E97797
CQC		IEC 60384–14	CQC12001081968 CQC12001081972 CQC12001081971 CQC12001081970 CQC12001088067

Environmental Compliance

All new KEMET EMI capacitors are RoHS compliant and Halogen-Free.

Downloaded from Arrow.com.

Table 1 – Ratings & Part Number Reference

Capacitance Value (µF)	Size Code	Maximum Dimensions in mm			Lead Spacing (S)	dV/dt (V/µs)	Part Number
		T	H	L			
0.001	KF	3	8	10	7.5	800	F881KF102(1)300(2)V272
0.0012	KG	4	8	10	7.5	800	F881KG122(1)300(2)V272
0.0015	KG	4	8	10	7.5	800	F881KG152(1)300(2)V272
0.0018	KH	4	9	10	7.5	800	F881KH182(1)300(2)V272
0.0022	KH	4	9	10	7.5	800	F881KH222(1)300(2)V272
0.0025	KJ	5	10.5	10	7.5	800	F881KJ252(1)300(2)V272
0.0027	KJ	5	10.5	10	7.5	800	F881KJ272(1)300(2)V272
0.0033	KJ	5	10.5	10	7.5	800	F881KJ332(1)300(2)V272
0.0039	KJ	5	10.5	10	7.5	800	F881KJ392(3)300(2)V272
0.0039	KM	6	12	10.5	7.5	800	F881KM392(1)300(2)V272
0.0047	KM	6	12	10.5	7.5	800	F881KM472(1)300(2)V272
0.0056	KM	6	12	10.5	7.5	800	F881KM562(3)300(2)V272
0.001	AE	4	8	13	10	800	F881AE102(1)300(2)V272
0.0012	AE	4	8	13	10	800	F881AE122(1)300(2)V272
0.0015	AE	4	8	13	10	800	F881AE152(1)300(2)V272
0.0018	AE	4	8	13	10	800	F881AE182(1)300(2)V272
0.0018	AL	9.5	7.5	13	10	800	F881AL182(1)300(2)V272
0.0022	AE	4	8	13	10	800	F881AE222(1)300(2)V272
0.0022	AL	9.5	7.5	13	10	800	F881AL222(1)300(2)V272
0.0025	AG	4	9	13	10	800	F881AG252(1)300(2)V272
0.0025	AL	9.5	7.5	13	10	800	F881AL252(1)300(2)V272
0.0027	AG	4	9	13	10	800	F881AG272(1)300(2)V272
0.0027	AL	9.5	7.5	13	10	800	F881AL272(1)300(2)V272
0.0033	AK	5	11	13	10	800	F881AK332(1)300(2)V272
0.0033	AL	9.5	7.5	13	10	800	F881AL332(1)300(2)V272
0.0039	AK	5	11	13	10	800	F881AK392(1)300(2)V272
0.0039	AL	9.5	7.5	13	10	800	F881AL392(1)300(2)V272
0.0047	AK	5	11	13	10	800	F881AK472(3)300(2)V272
0.0047	AL	9.5	7.5	13	10	800	F881AL472(1)300(2)V272
0.0056	AL	9.5	7.5	13	10	800	F881AL562(1)300(2)V272
0.0056	AP	6	12	13	10	800	F881AP562(1)300(2)V272
0.0068	AL	9.5	7.5	13	10	800	F881AL682(3)300(2)V272
0.0068	AP	6	12	13	10	800	F881AP682(1)300(2)V272
0.0082	AO	7	17	13	10	800	F881AO822(1)300(2)V272
0.01	AO	7	17	13	10	800	F881AO103(1)300(2)V272
0.0027	BB	4	10	18	15	600	F881BB272(1)300(2)
0.0033	BB	4	10	18	15	600	F881BB332(1)300(2)
0.0039	BB	4	10	18	15	600	F881BB392(1)300(2)
0.0047	BB	4	10	18	15	600	F881BB472(1)300(2)
0.0056	BB	4	10	18	15	600	F881BB562(1)300(2)
0.0068	BB	4	10	18	15	600	F881BB682(1)300(2)
0.0082	BB	4	10	18	15	600	F881BB822(1)300(2)
0.01	BB	4	10	18	15	600	F881BB103(3)300(2)
0.01	BC	5	11	18	15	600	F881BC103(1)300(2)
0.012	BC	5	11	18	15	600	F881BC123(1)300(2)
0.015	BC	5	11	18	15	600	F881BC153(3)300(2)
0.015	BE	5.5	12.5	18	15	600	F881BE153(1)300(2)
0.015	BT	9	12.5	18	15	600	F881BT153(1)300(2)
0.018	BE	5.5	12.5	18	15	600	F881BE183(1)300(2)
0.018	BT	9	12.5	18	15	600	F881BT183(1)300(2)
0.022	BG	6	12	18	15	600	F881BG223(3)300(2)
0.022	BT	9	12.5	18	15	600	F881BT223(1)300(2)
0.025	BI	6	17.5	18	15	600	F881BI253(3)300(2)
0.025	BK	7.5	13.5	18	15	600	F881BK253(1)300(2)
0.025	BR	13	12	18	15	600	F881BR253(1)300(2)
0.025	BT	9	12.5	18	15	600	F881BT253(1)300(2)
0.027	BI	6	17.5	18	15	600	F881BI273(1)300(2)
0.027	BK	7.5	13.5	18	15	600	F881BK273(1)300(2)
Capacitance Value (µF)	**Size Code**	**T (mm)**	**H (mm)**	**L (mm)**	**Lead Spacing (S)**	**dV/dt (V/µs)**	**Part Number**

(1) M = ±20%, K = ±10%.
(2) Insert lead and packaging code. See Ordering Options Table for available options.
(3) M = ±20% (only available tolerance).

Downloaded from Arrow.com.

Table 1 – Ratings & Part Number Reference cont.

Capacitance Value (µF)	Size Code	Maximum Dimensions in mm			Lead Spacing (S)	dV/dt (V/µs)	Part Number
		T	H	L			
0.027	BR	13	12	18	15	600	F881BR273(1)300(2)
0.027	BT	9	12.5	18	15	600	F881BT273(1)300(2)
0.033	BI	6	17.5	18	15	600	F881BI333(1)300(2)
0.033	BO	7.5	18.5	18	15	600	F881BO333(1)300(2)
0.033	BR	13	12	18	15	600	F881BR333(1)300(2)
0.033	BT	9	12.5	18	15	600	F881BT333(1)300(2)
0.039	BI	6	17.5	18	15	600	F881BI393(3)300(2)
0.039	BO	7.5	18.5	18	15	600	F881BO393(1)300(2)
0.039	BP	8.5	14.5	18	15	600	F881BP393(1)300(2)
0.039	BR	13	12	18	15	600	F881BR393(1)300(2)
0.039	BT	9	12.5	18	15	600	F881BT393(3)300(2)
0.047	BO	7.5	18.5	18	15	600	F881BO473(1)300(2)
0.047	BP	8.5	14.5	18	15	600	F881BP473(3)300(2)
0.047	BR	13	12	18	15	600	F881BR473(1)300(2)
0.047	BS	10	16	18	15	600	F881BS473(1)300(2)
0.056	BO	7.5	18.5	18	15	600	F881BO563(3)300(2)
0.056	BR	13	12	18	15	600	F881BR563(3)300(2)
0.056	BS	10	16	18	15	600	F881BS563(1)300(2)
0.068	BY	11	19	18	15	600	F881BY683(1)300(2)
0.082	BY	11	19	18	15	600	F881BY823(3)300(2)
0.082	BZ	12	20	18	15	600	F881BZ823(1)300(2)
0.039	DB	6	14.5	26	22.5	500	F881DB393(1)300(2)
0.047	DB	6	14.5	26	22.5	500	F881DB473(1)300(2)
0.056	DB	6	14.5	26	22.5	500	F881DB563(3)300(2)
0.056	DI	7	16	26	22.5	500	F881DI563(1)300(2)
0.068	DI	7	16	26	22.5	500	F881DI683(1)300(2)
0.082	DH	8	16	26	22.5	500	F881DH823(1)300(2)
0.082	DI	7	16	26	22.5	500	F881DI823(3)300(2)
0.1	DH	8	16	26	22.5	500	F881DH104(3)300(2)
0.1	DJ	8.5	17	26	22.5	500	F881DJ104(1)300(2)
0.12	DJ	8.5	17	26	22.5	500	F881DJ124(3)300(2)
0.12	DM	9	18.5	26	22.5	500	F881DM124(1)300(2)
0.15	DO	10	18.5	26	22.5	500	F881DO154(1)300(2)
0.18	DP	11	20	26	22.5	500	F881DP184(1)300(2)
0.22	DP	11	20	26	22.5	500	F881DP224(3)300(2)
0.22	DU	13	22	26	22.5	500	F881DU224(1)300(2)
0.25	DU	13	22	26	22.5	500	F881DU254(1)300(2)
0.27	DU	13	22	26	22.5	500	F881DU274(1)300(2)
0.33	DY	15.5	24.5	26	22.5	500	F881DY334(1)300(2)
0.39	DY	15.5	24.5	26	22.5	500	F881DY394(1)300(2)
0.1	FB	9	17	31.5	27.5	400	F881FB104(1)300(2)
0.12	FB	9	17	31.5	27.5	400	F881FB124(1)300(2)
0.15	FB	9	17	31.5	27.5	400	F881FB154(1)300(2)
0.18	FC	11	20	31.5	27.5	400	F881FC184(1)300(2)
0.22	FC	11	20	31.5	27.5	400	F881FC224(1)300(2)
0.22	FH	21	12.5	31.5	27.5	400	F881FH224(1)300(2)
0.25	FC	11	20	31.5	27.5	400	F881FC254(3)300(2)
0.25	FH	21	12.5	31.5	27.5	400	F881FH254(1)300(2)
0.27	FC	11	20	31.5	27.5	400	F881FC274(3)300(2)
0.27	FH	21	12.5	31.5	27.5	400	F881FH274(1)300(2)
0.27	FI	13	25	31.5	27.5	400	F881FI274(1)300(2)
0.33	FH	21	12.5	31.5	27.5	400	F881FH334(3)300(2)
0.33	FI	13	25	31.5	27.5	400	F881FI334(1)300(2)
0.39	FI	13	25	31.5	27.5	400	F881FI394(1)300(2)
0.39	FQ	27.5	16	31.5	27.5	400	F881FQ394(1)300(2)
0.47	FR	17.5	28	31.5	27.5	400	F881FR474(1)300(2)
0.47	FQ	27.5	16	31.5	27.5	400	F881FQ474(1)300(2)
0.56	FN	14	28	31.5	27.5	400	F881FN564(1)300(2)
Capacitance Value (µF)	**Size Code**	**T (mm)**	**H (mm)**	**L (mm)**	**Lead Spacing (S)**	**dV/dt (V/µs)**	**Part Number**

(1) M = ±20%, K = ±10%.
(2) Insert lead and packaging code. See Ordering Options Table for available options.
(3) M = ±20% (only available tolerance).

Downloaded from Arrow.com.

Table 1 – Ratings & Part Number Reference cont.

Capacitance Value (µF)	Size Code	Maximum Dimensions in mm			Lead Spacing (S)	dV/dt (V/µs)	Part Number
		T	H	L			
0.56	FR	17.5	28	31.5	27.5	400	F881FR564(1)300(2)
0.56	FT	31	19	31.5	27.5	400	F881FT564(1)300(2)
0.68	FO	17	40	31.5	27.5	400	F881FO684(1)300(2)
0.68	FR	17.5	28	31.5	27.5	400	F881FR684(1)300(2)
0.68	FT	31	19	31.5	27.5	400	F881FT684(1)300(2)
0.82	FO	17	40	31.5	27.5	400	F881FO824(1)300(2)
0.82	FT	31	19	31.5	27.5	400	F881FT824(3)300(2)
0.82	FY	22	37	31.5	27.5	400	F881FY824(1)300(2)
1	FY	22	37	31.5	27.5	400	F881FY105(1)300(2)
0.33	RB	11	22	41	37.5	300	F881RB334(1)300(2)
0.39	RB	11	22	41	37.5	300	F881RB394(1)300(2)
0.47	RF	13	24	41	37.5	300	F881RF474(1)300(2)
0.47	RV	24	15	41	37.5	300	F881RV474(1)300(2)
0.56	RH	15	26	41	37.5	300	F881RH564(1)300(2)
0.56	RV	24	15	41	37.5	300	F881RV564(1)300(2)
0.68	RH	15	26	41	37.5	300	F881RH684(1)300(2)
0.68	RW	24	19	41	37.5	300	F881RW684(1)300(2)
0.82	RH	15	26	41	37.5	300	F881RH824(1)300(2)
0.82	RW	24	19	41	37.5	300	F881RW824(1)300(2)
1	RD	19	32	41	37.5	300	F881RD105(1)300(2)
1	RW	24	19	41	37.5	300	F881RW105(1)300(2)
Capacitance Value (µF)	**Size Code**	**T (mm)**	**H (mm)**	**L (mm)**	**Lead Spacing (S)**	**dV/dt (V/µs)**	**Part Number**

(1) M = ±20%, K = ±10%.
(2) Insert lead and packaging code. See Ordering Options Table for available options.
(3) M = ±20% (only available tolerance).

Downloaded from Arrow.com.

Soldering Process

The implementation of the RoHS directive has resulted in the selection of SnAgCu (SAC) alloys or SnCu alloys as primary solder. This has increased the liquidus temperature from that of 183ºC for SnPb eutectic alloy to 217 – 221°C for the new alloys. As a result, the heat stress to the components, even in wave soldering, has increased considerably due to higher pre-heat and wave temperatures. Polypropylene capacitors are especially sensitive to heat (the melting point of polypropylene is 160 – 170°C). Wave soldering can be destructive, especially for mechanically small polypropylene capacitors (with lead spacing of 5 mm to 15 mm), and great care has to be taken during soldering. The recommended solder profiles from KEMET should be used. Please consult KEMET with any questions. In general, the wave soldering curve from IEC Publication 61760–1 Edition 2 serves as a solid guideline for successful soldering. Please see Figure 1.

Reflow soldering is not recommended for through-hole film capacitors. Exposing capacitors to a soldering profile in excess of the above the recommended limits may result to degradation or permanent damage to the capacitors.

Do not place the polypropylene capacitor through an adhesive curing oven to cure resin for surface mount components. Insert through-hole parts after the curing of surface mount parts. Consult KEMET to discuss the actual temperature profile in the oven, if through-hole components must pass through the adhesive curing process. A maximum two soldering cycles is recommended. Please allow time for the capacitor surface temperature to return to a normal temperature before the second soldering cycle.

Manual Soldering Recommendations

Following is the recommendation for manual soldering with a soldering iron.

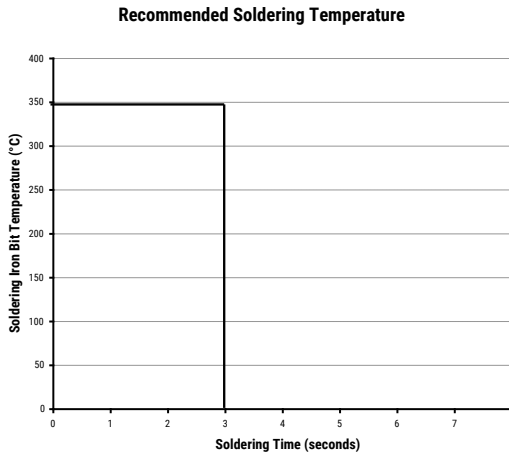

The soldering iron tip temperature should be set at 350°C (+10°C maximum), with the soldering duration not to exceed more than 3 seconds.

Wave Soldering Recommendations

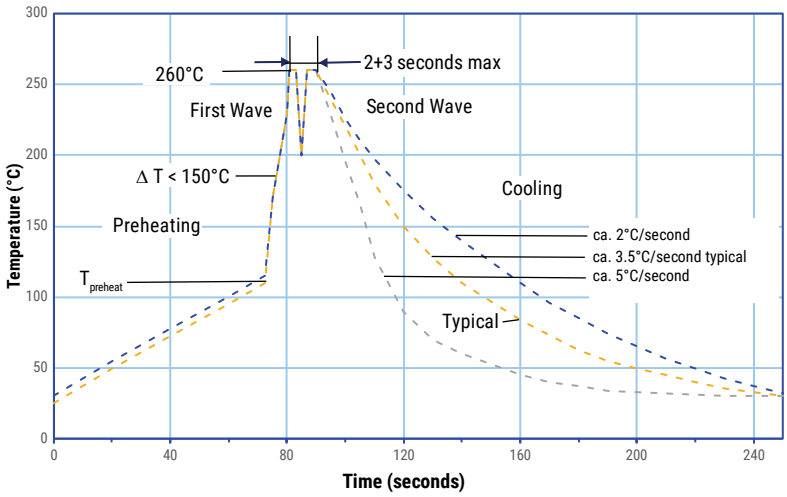

Downloaded from Arrow.com.

Soldering Process cont.

Wave Soldering Recommendations cont.

1. The table indicates the maximum set-up temperature of the soldering process
Figure 1

Dielectric film material	Maximum Preheat Temperature		Maximum Peak Soldering Temperature	
	Capacitor Pitch ≤ 15 mm	Capacitor Pitch > 15 mm	Capacitor Pitch ≤ 15 mm	Capacitor Pitch > 15 mm
Polyester	130°C	130°C	270°C	270°C
Polypropylene	110°C	130°C	260°C	270°C
Paper	130°C	140°C	270°C	270°C
Polyphenylene Sulphide	150°C	160°C	270°C	270°C

2. The maximum temperature measured inside the capacitor:
   Set the temperature so that inside the element the maximum temperature is below the limit:

Dielectric Film Material	Maximum temperature measured inside the element
Polyester	160°C
Polypropylene	110°C
Paper	160°C
Polyphenylene Sulphide	160°C

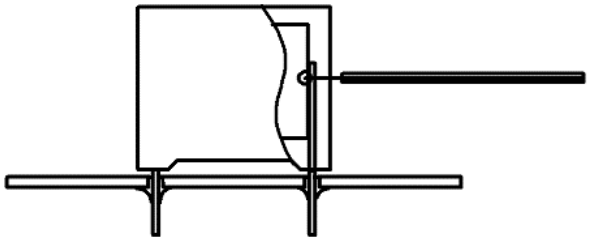

Temperature monitored inside the capacitor.

Selective Soldering Recommendations

Selective dip soldering is a variation of reflow soldering. In this method, the printed circuit board with through-hole components to be soldered is preheated and transported over the solder bath as in normal flow soldering without touching the solder. When the board is over the bath, it is stopped and pre-designed solder pots are lifted from the bath with molten solder only at the places of the selected components, and pressed against the lower surface of the board to solder the components.

The temperature profile for selective soldering is similar to the double wave flow soldering outlined in this document, **however, instead of two baths, there is only one bath with a time from 3 to 10 seconds.** In selective soldering, the risk of overheating is greater than in double wave flow soldering, and great care must be taken so that the parts are not overheated.

Downloaded from Arrow.com.

Construction

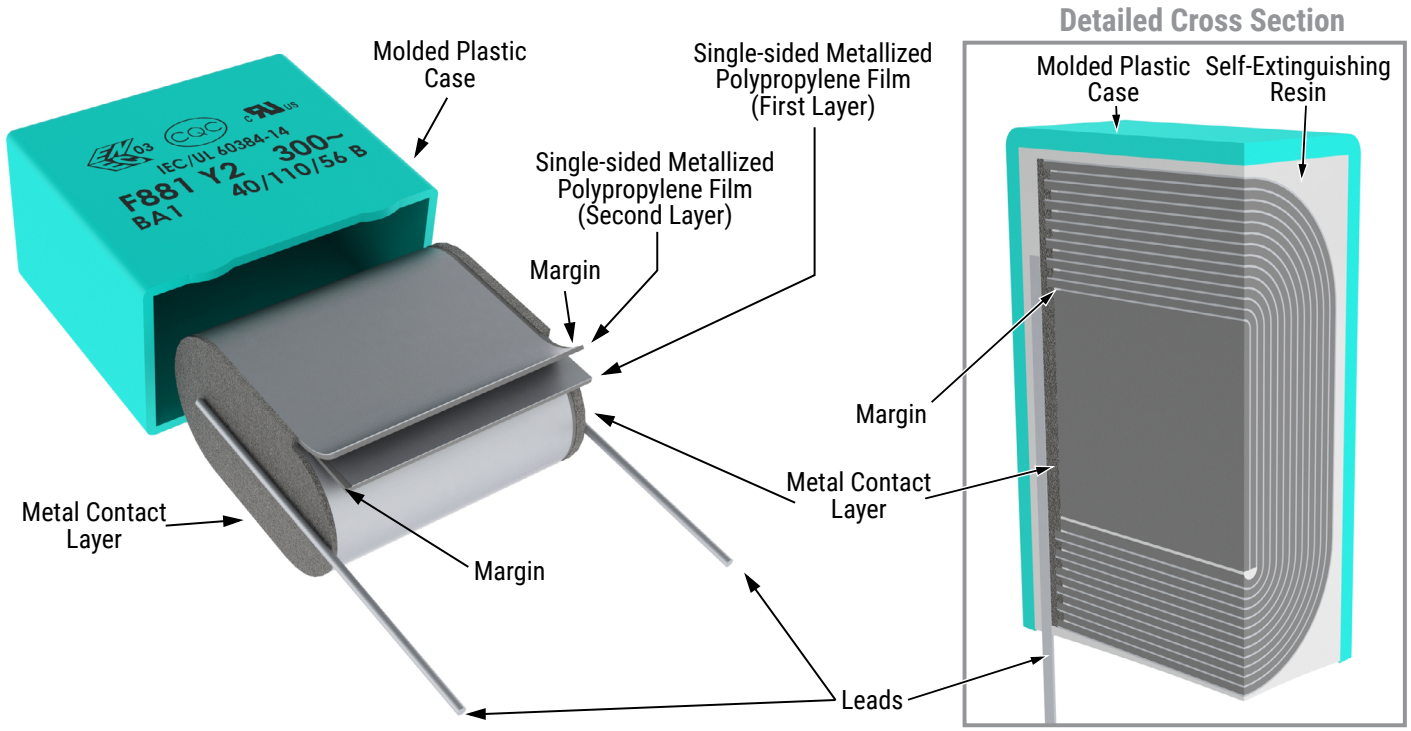

Winding Scheme

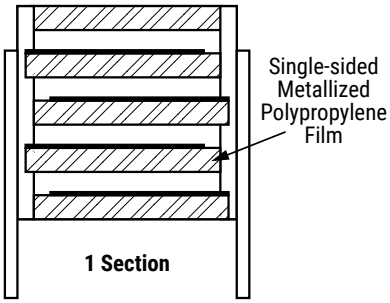

Downloaded from Arrow.com.

Marking

Pitch = 7.5 mm

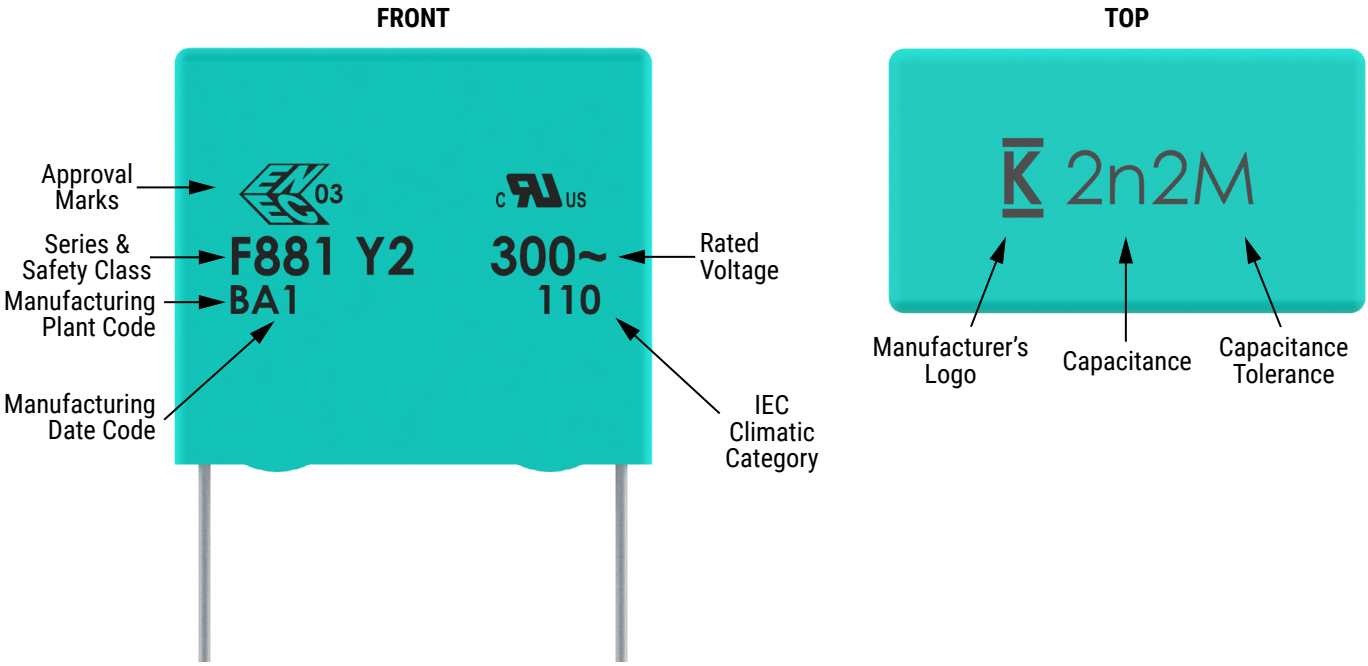

Pitch ≥ 10 mm

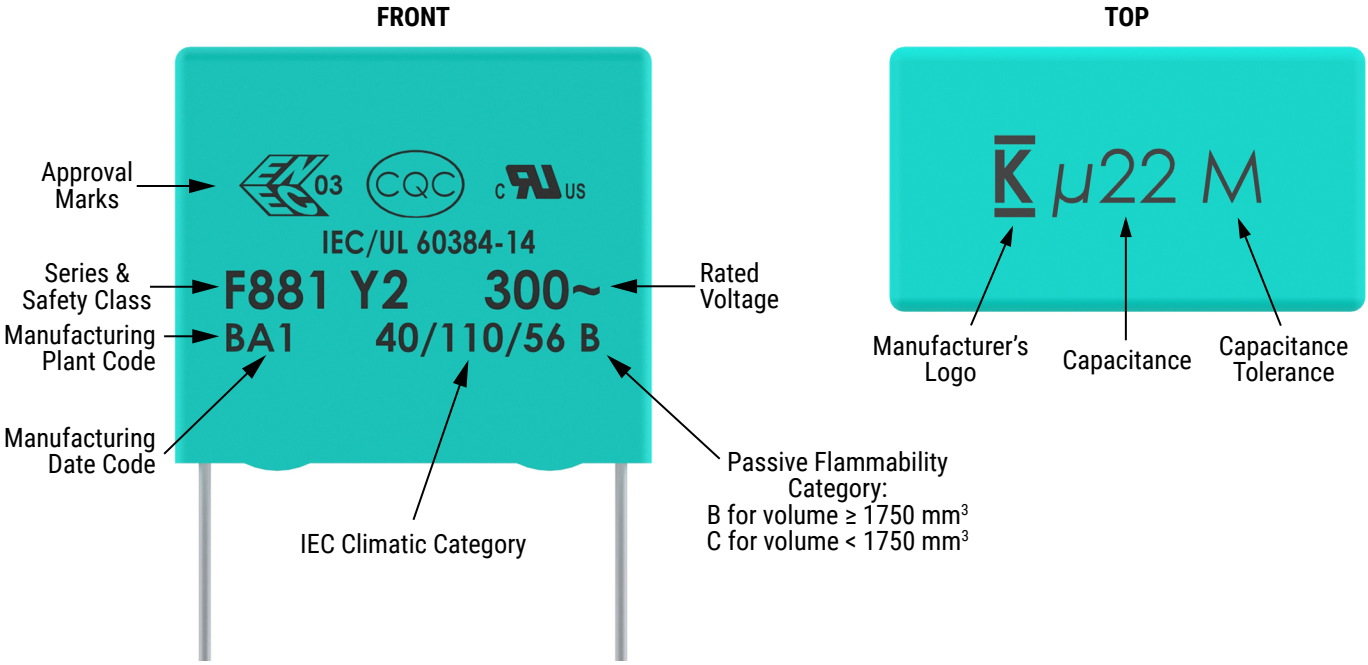

Slight change in the layout can be possible but this does not affect the content of the information of the current marking.
This change will be achieved without impact to product form, fit or function, as the products are equivalent with respect to physical, mechanical, quality and reliability characteristics.

Downloaded from Arrow.com.

Marking cont.

Manufacturing Date Code (IEC 60062)									
Year	Code	Year	Code	Year	Code	Month	Code	Month	Code
2020	M	2027	V	2034	E	January	1	July	7
2021	N	2028	W	2035	F	February	2	August	8
2022	P	2029	X	2036	H	March	3	September	9
2023	R	2030	A	2037	J	April	4	October	O
2024	S	2031	B	2038	K	May	5	November	N
2025	T	2032	C	2039	L	June	6	December	D
2026	U	2033	D	2040	M				

Downloaded from Arrow.com.

Packaging Quantities

Size Code	Lead Spacing	Thickness (mm)	Height (mm)	Length (mm)	Bulk Short Leads	Bulk Long Leads	Standard Reel ø 355 mm	Large Reel ø 500 mm	Ammo	Pizza
KE	7.5	2.5	6	10	2,000	2,500	2,500		3,500	
KF		3	8	10	1,500	1,750	2,100		2,800	
KG		4	8	10	2,000	1,500	1,500		2,100	
KJ		5	10.5	10	1,500	1,000	1,200		1,600	
KM		6	12	10.5	1,000	800	1,000		1,350	
KH		4	9	10	2,000	1,500	1,500		2,100	
AN	10	3.5	9	13	2,000	2,200	850	1,700	1,150	
AG		4	9	13	2,000	2,200	750	1,500	1,000	
AK		5	11	13	1,300	2,000	600	1,250	800	
AP		6	12	13	1,000	1,800	500	1,000	680	
AO		7	17	13	600	700	450	900	580	
AL		9.5	7.5	13	1,000	1,500	300	600	430	
AE		4	8	13	2,000	2,200	750	1,500	1,000	
BB	15	4	10	18	2,500	1,500	750	1,500	1,000	1,411
BC		5	11	18	1,000	1,250	600	1,250	800	1,139
BE		5.5	12.5	18	800	1,000	550	1,100	750	1,020
BG		6	12	18	1,750	1,000	500	1,000	680	935
BK		7.5	13.5	18	1,000	800	350	800	500	748
BI		6	17.5	18	1,000	800	500	1,000	680	935
BP		8.5	14.5	18	1,000	650	300	700	440	663
BT		9	12.5	18	1,000	700	270	650	410	629
BO		7.5	18.5	18	900	500	350	800	500	748
BS		10	16	18	750	550	300	600	380	561
BR		13	12	18	750	520	200	480	280	425
BY		11	19	18	450	400	250	500	340	510
BA		8.5	12.5	18	1,000	650	300	700	440	663
BZ		12	20	18	350	300	220	450	330	459
DB	22.5	6	14.5	26	805	450	300	700	464	660
DI		7	16	26	700	450	250	550	380	564
DH		8.0	16.0	26	520	300	240	500	330	492
DJ		8.5	17	26	450	350	250	450	280	468
DM		9	18.5	26	400	225	200	400	300	444
DO		10	18.5	26	360	350	160	350	235	396
DP		11	20	26	300	200	190	350	217	360
DU		13	22	26	230	150	150	300	200	300
DY		15.5	24.5	26	150	100	120	250	170	252

Downloaded from Arrow.com.

Packaging Quantities cont.

Size Code	Lead Spacing	Thickness (mm)	Height (mm)	Length (mm)	Bulk Short Leads	Bulk Long Leads	Standard Reel ø 355 mm	Large Reel ø 500 mm	Ammo	Pizza
FB	27.5	9.0	17.0	31.5						370
FC		11.0	20.0	31.5						300
FI		13.0	25.0	31.5						250
FN		14.0	28.0	31.5						230
FO		17.0	40.0	31.5						190
FR		17.5	28.0	31.5						190
FS		19.0	29.0	31.5						170
FY		22.0	37.0	31.5						150
FH		21.0	12.5	31.5						150
FQ		27.5	16.0	31.5						120
FT		31.0	19.0	31.5						100
RB	37.5	11.0	22.0	41.0						210
RF		13.0	24.0	41.0						175
RH		15.0	26.0	41.0						154
RC		16.0	28.5	41.0						140
RD		19.0	32.0	41.0						119
RP		21.0	38.0	41.0						105
RO		24.0	44.0	41.0						91
RU		30.0	45.0	41.0						77
RV		24.0	15.0	41.0						91
RW		24.0	19.0	41.0						91

Downloaded from Arrow.com.

Lead Taping & Packaging (IEC 60286–2)

Lead Spacing 5 mm

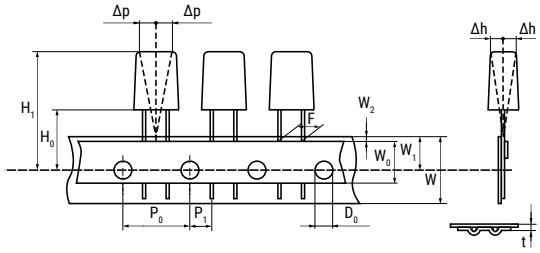

Lead Spacing 7.5 mm

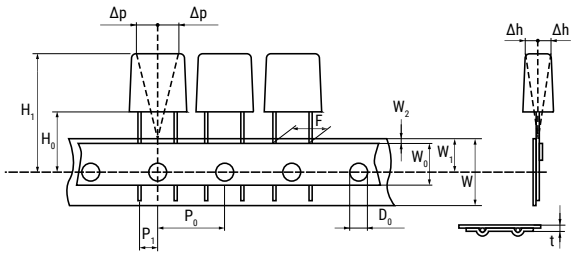

Lead Spacing 10 – 15 mm

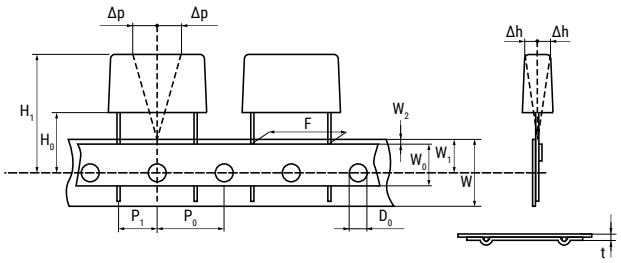

Lead Spacing 22.5 – 27.5 mm

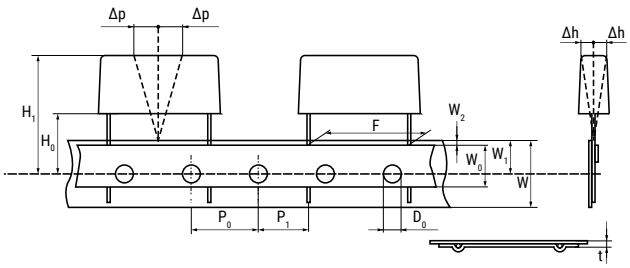

Taping Specification

Dimensions in mm									Standard IEC 60286–2
Lead Spacing	+0.6/−0.1	F	5.0	7.5	10.0	15.0	22.5	27.5	F
Carrier Tape Width	+1/−0.5	W	18.0	18.0	18.0	18.0	18.0	18.0	$18^{+1/-0.5}$
Hold-Down Tape Width	Minimum	W_0	6.0	6.0	9.0	10.0	10.0	10.0	
Position of Sprocket Hole	±0.5	W_1	9.0	9.0	9.0	9.0	9.0	9.0	$9^{+0.75/-0.5}$
Distance Between Tapes	Maximum	W_2	3.0	3.0	3.0	3.0	3.0	3.0	3.0
Sprocket Hole Diameter	±0.2	D_0	4.0	4.0	4.0	4.0	4.0	4.0	4.0
Feed Hole Lead Spacing	±0.2(1)	P_0(3)	12.7	12.7	12.7	12.7	12.7	12.7	12.7
Distance Lead – Feed Hole	±0.7	P_1	3.85	3.75	7.7	5.2	7.8	5.3	P^1
Deviation Tape – Plane	Maximum	Δp	1.3	1.3	1.3	1.3	1.3	1.3	1.3
Lateral Deviation	±2	Δh	2.0	2.0	2.0	2.0	2.0	2.0	2.0
Total Thickness	±0.2	t	0.7	0.7	0.7	0.7	0.9^{MAX}	0.9^{MAX}	0.9^{MAX}
Sprocket Hole/Cap Body	±0.5	H_0(2)	$18.5^{\pm0.5}$	$18.5^{\pm0.5}$	$18.5^{\pm0.5}$	$18.5^{\pm0.5}$	$18.5^{\pm0.5}$	$18.5^{\pm0.5}$	$18^{+2/-0}$

(1) Maximum cumulative feed hole error, 1 mm per 20 parts.
(2) 16.5 mm available on request.
(3) 15 mm available on request (F ≥ 10 mm).

Downloaded from Arrow.com.

Lead Taping & Packaging (IEC 60286–2) cont.

Ammo Specifications

Series	Dimensions (mm)		
	H	W	T
F5A, F5B, F5D	360	340	59
F6xx, F8xx			
PHExxx, PMExxx, PMRxxx	330	330	50

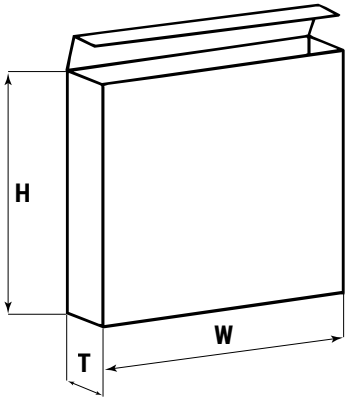

Reel Specifications

Series	Dimensions (mm)		
	D	H	W
F5A, F5B, F5D	355 500	30 25	55 (Max)
F6xx, F8xx			
PHExxx, PMExxx, PMRxxx	360 500	30	46 (Max)

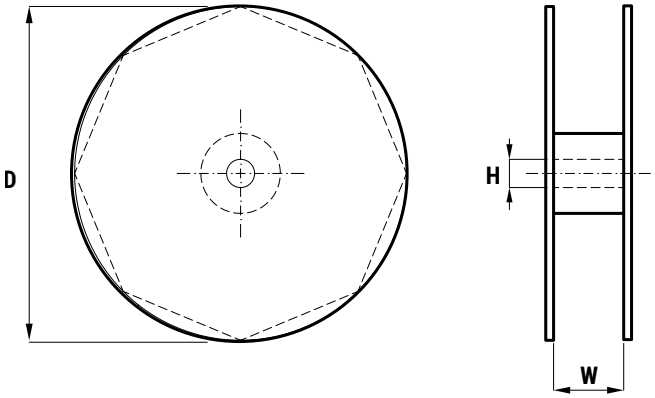

Downloaded from Arrow.com.

KEMET Electronics Corporation Sales Offices

For a complete list of our global sales offices, please visit https://www.yageogroup.com/SalesResources/SalesOffices

Disclaimer

YAGEO Corporation and its affiliates do not recommend the use of commercial or automotive grade products for high reliability applications or manned space flight.

All product specifications, statements, information and data (collectively, the "Information") in this datasheet are subject to change. The customer is responsible for checking and verifying the extent to which the Information contained in this publication is applicable to an order at the time the order is placed. All Information given herein is believed to be accurate and reliable, but it is presented without guarantee, warranty, or responsibility of any kind, expressed or implied.

Statements of suitability for certain applications are based on KEMET Electronics Corporation's ("KEMET") knowledge of typical operating conditions for such applications, but are not intended to constitute – and KEMET specifically disclaims – any warranty concerning suitability for a specific customer application or use. The Information is intended for use only by customers who have the requisite experience and capability to determine the correct products for their application. Any technical advice inferred from this Information or otherwise provided by KEMET with reference to the use of KEMET's products is given gratis, and KEMET assumes no obligation or liability for the advice given or results obtained.

Although KEMET designs and manufactures its products to the most stringent quality and safety standards, given the current state of the art, isolated component failures may still occur. Accordingly, customer applications which require a high degree of reliability or safety should employ suitable designs or other safeguards (such as installation of protective circuitry or redundancies) in order to ensure that the failure of an electrical component does not result in a risk of personal injury or property damage.

Although all product–related warnings, cautions and notes must be observed, the customer should not assume that all safety measures are indicated or that other measures may not be required.

Additional information about production site flexibility can be found <here>

KEMET is a registered trademark of KEMET Electronics Corporation.

Downloaded from Arrow.com.