REVISION					
ZONE	LTR	ECN	DESCRIPTION	DATE	APPROVED
	A	39959	NEW RELEASE	2/17/00	MC
	B	42132	UPDATE REV. LETTER	1/23/4	T
	C	43778	UPDATE REV LETTER.	10/15/8	TL
	D	43890	ADD LEAD & BREAKAWY NOTCH DETAIL,ADD NOTE 4.UPDATE NOTE 2.	4/20/9	TL

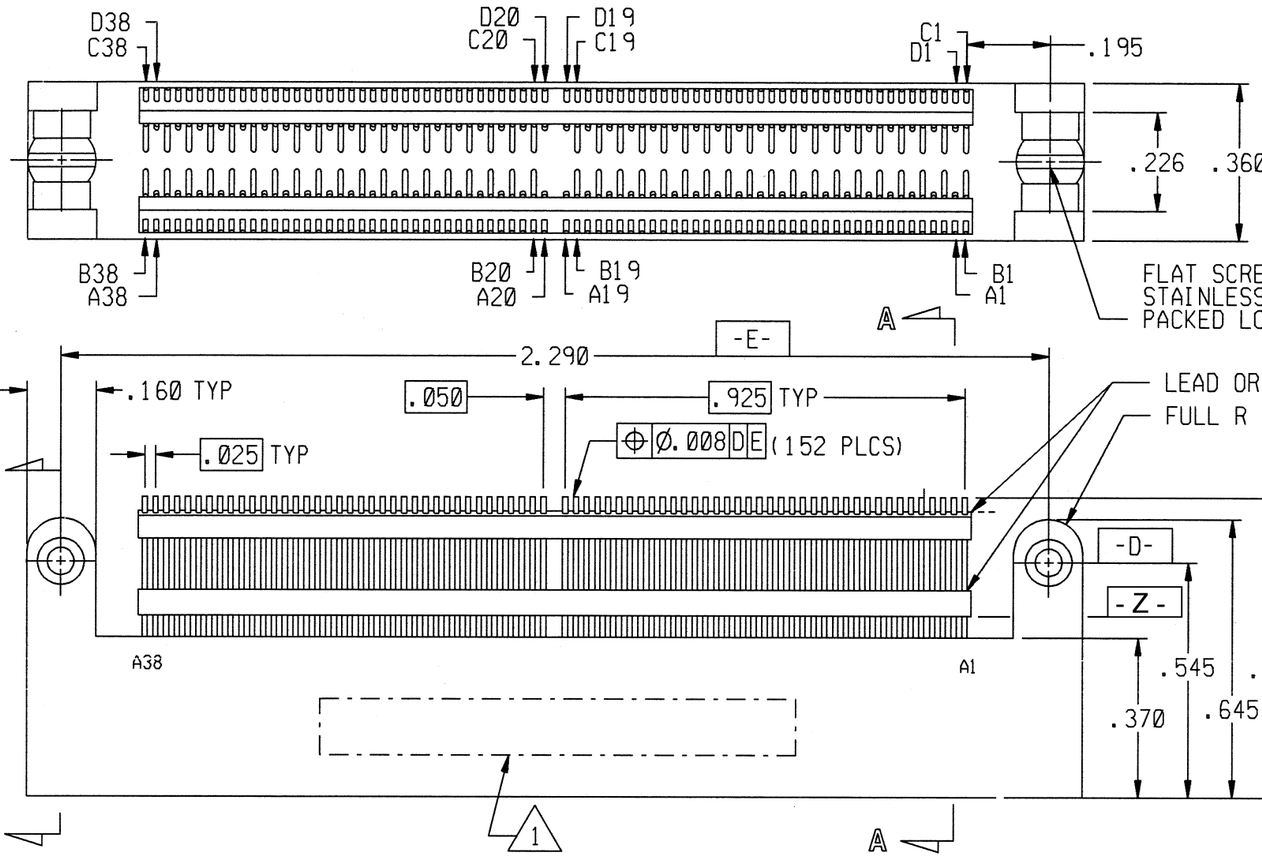

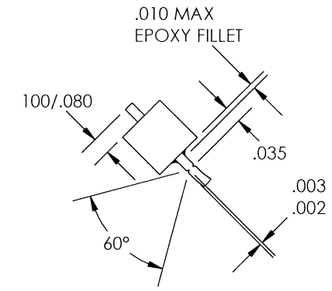

LEAD & BREAKAWAY NOTCH DETAIL

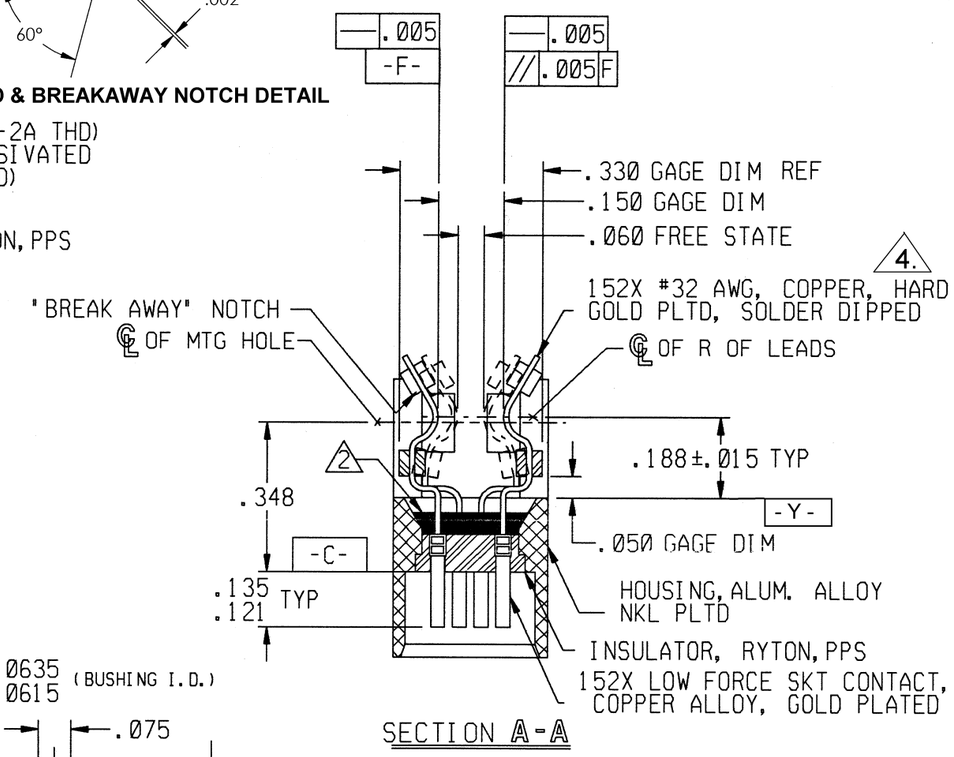

SECTION A-A

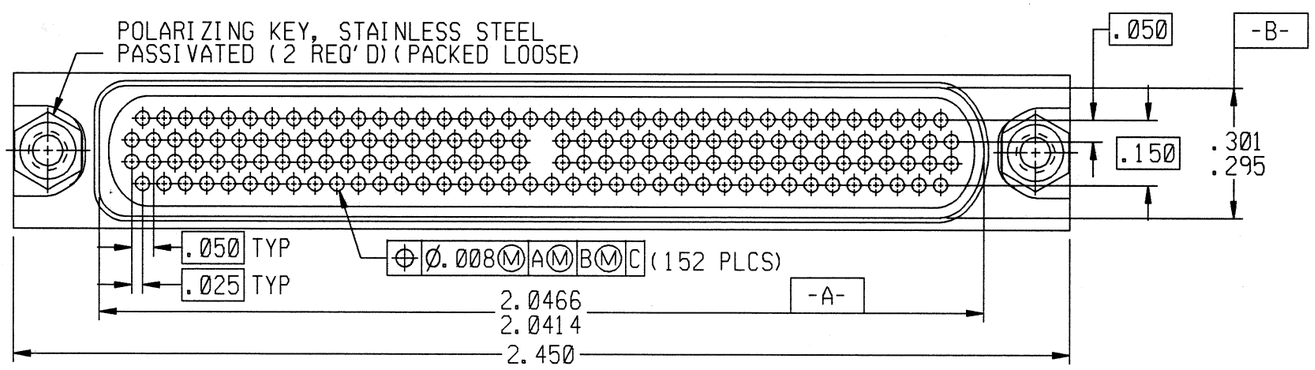

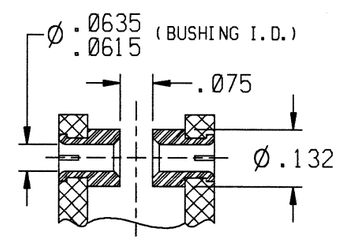

SECTION B-B

NOTES: UNLESS OTHERWISE SPECIFIED

1. MARK PER TPD.
2. EPOXY AS SHOWN WITH P/N: 1325344 -3 AND/OR 1325344-2. EPOXY TO BE .025 MIN . BELOW DATUM -Y- .
3. CRIMP LEADS INTO CONTACTS PER MEP302-05.
4. NO SOLDER ON LEADS REQUIRED BELOW DATUM -Z- .
5. LEAD ORGANIZERS TO BONDED IN PLACE WITH A BEAD OF EPOXY (1325708-1.).

UNLESS OTHERWISE SPECIFIED DIMENSIONS ARE IN INCHES. TOLERANCE ARE:

FRACTIONS	DECIMALS	ANGLES
± 1/8	.XX ±.01 .XXX ±.005	±2°

MATERIAL:

FINISH:

APPROVALS		
	SIGNATURE	DATE
DRAWN BY	MEL F. CAMPOS	02/17/00
P.E.		2/17/00
M.E.		
Q.A.		

THIS DOCUMENT IS THE PROPERTY OF MICRODOT CONNECTORS, A DIVISION OF UNI-STAR INDUSTRIES INC. USE OF THIS DOCUMENT OR ANY PART THEREOF IS STRICTLY FORBIDDEN WITHOUT THE EXPRESS WRITTEN PERMISSION OF MICRODOT CONNECTORS, A DIVISION OF UNI-STAR INDUSTRIES INC.

MICRODOT CONNECTORS
A DIVISION OF UNI-STAR INDUSTRIES INC.
306 PASADENA AVE., SO. PASADENA, CA 91030

CONN. HDSM, RCPT, 152 SKT
HDSM4-152SLZ-2
MDC: 095-9092-1093
SISCON

PROD CODE 832
CODE CDM

SIZE	CODE IDENT NO.	DRAWING NO.
B	98278	2-1532025-2

SCALE: NONE
SHEET 1 OF 1

Downloaded from Arrow.com.