Connector Location A

Connector Location B

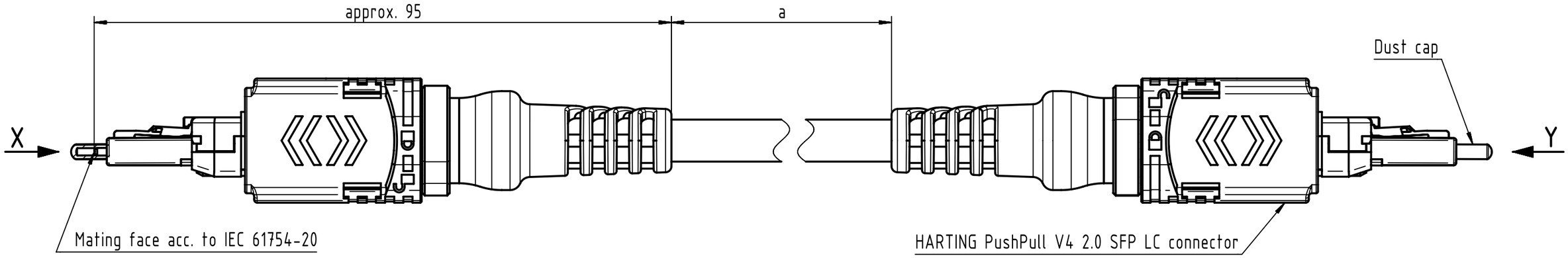

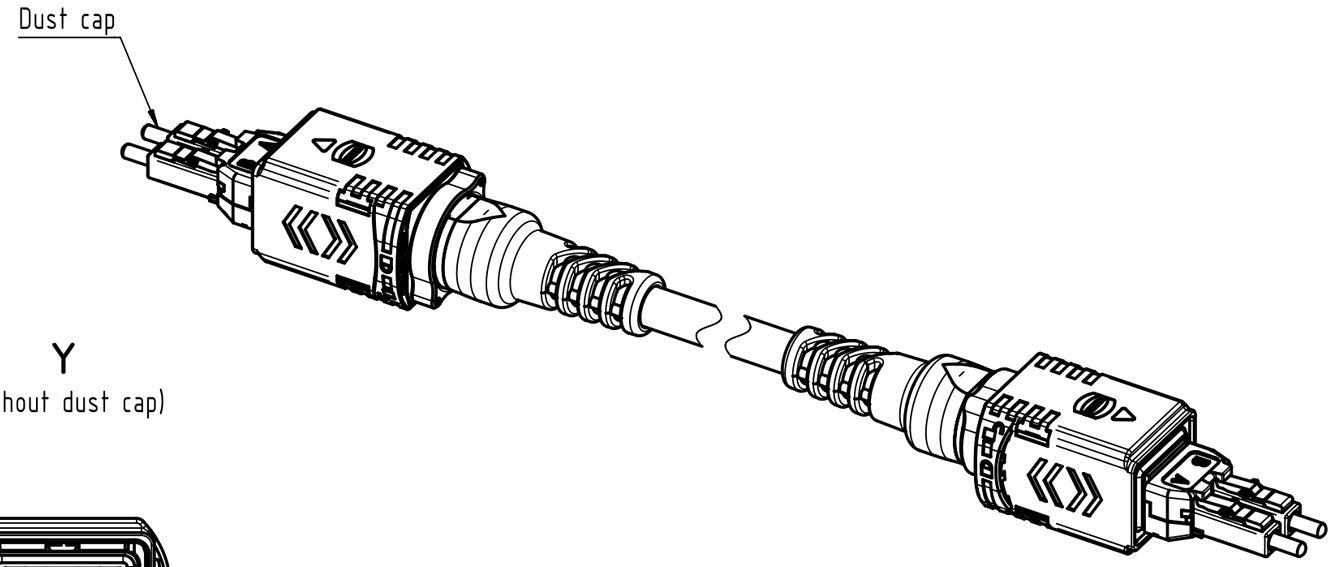

X
(without dust cap)

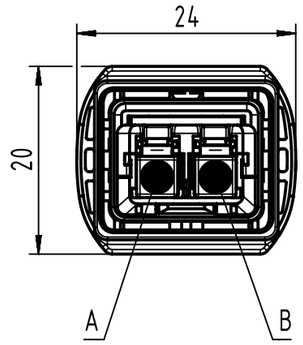

Loading-Plan

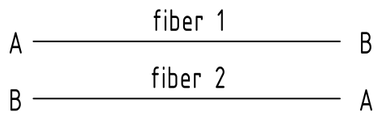

Y
(without dust cap)

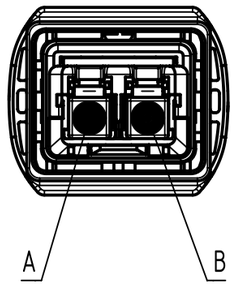

Protection level: IP67/65
Temperature range: -40°C...+70°C

All Dimensions in mm	Tech. Character.	Free size tol.	According to production drawing		
All rights reserved	Created by COSTEA	Inspected by COSTEA	Standardisation MUNTEANV	Date 2018-07-19	State Final Release
Department HCS - RO	Title FO CA PP2-PP2, 9µ, G657A1, PUR				Doc-Key / ECM-Nr. 100677727/UGD/006/D 500000137829
HARTING Customised Solutions D-32339 Espelkamp	Type TB	Number 3361221XXX0001		Rev. D	Page 1/2

A3

Downloaded from Arrow.com.

Cont. no.	Part no.	Type of cable	Dim. a[m]
27	33612211000001		100
26	33612210900001		90
25	33612210800001		80
24	33612210700001		70
23	33612210600001		60
22	33612210500001		50
21	33612210450001		45
20	33612210400001		40
19	33612210350001		35
18	33612210300001		30
17	33612210250001		25
16	33612210200001		20
15	33612210150001		15
14	33612210140001	Fiber optic, single mode 9/125 µm	14
13	33612210130001		13
12	33612210120001		12
11	33612210110001		11
10	33612210100001		10
9	33612210090001		9
8	33612210080001		8
7	33612210070001		7
6	33612210060001		6
5	33612210050001		5
4	33612210040001		4
3	33612210030001		3
2	33612210020001		2
1	33612210010001		1

All Dimensions in mm | Tech. Character. | Free size tol. | According to production drawing

All rights reserved

Department HCS - RO

HARTING Customised Solutions
D-32339 Espelkamp

Created by	Inspected by	Standardisation	Date	State
COSTEA	COSTEA	MUNTEANV	2018-07-19	Final Release

Title: FO CA PP2-PP2, 9µ, G657A1, PUR

Doc-Key / ECM-Nr.: 100677727/UGD/006/D 500000137829

Type: TB | Number: 3361221XXX0001 | Rev.: D | Page: 2/2

A3

Downloaded from Arrow.com.