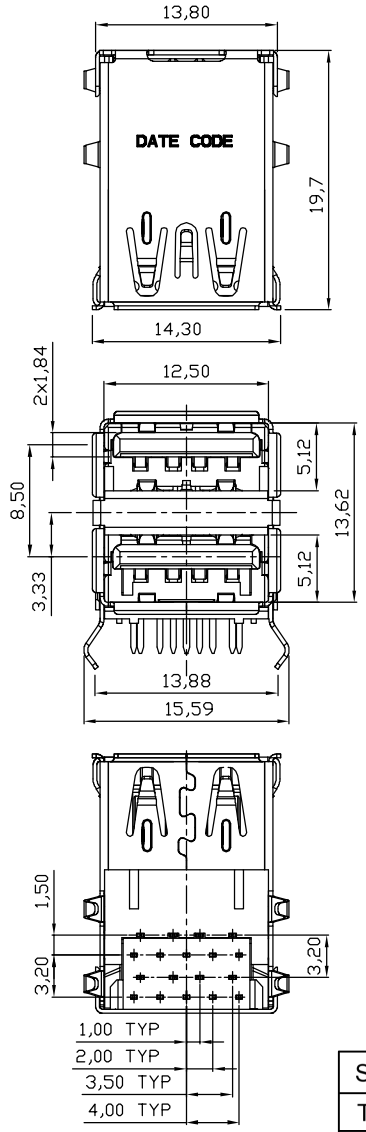

① USB3.0 COMPLIANT

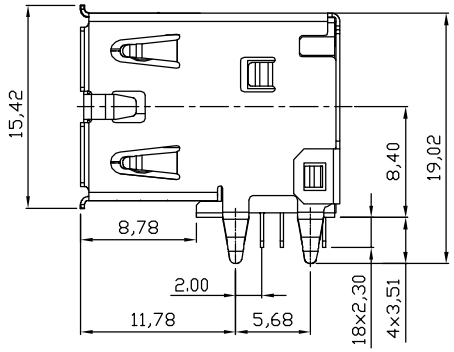

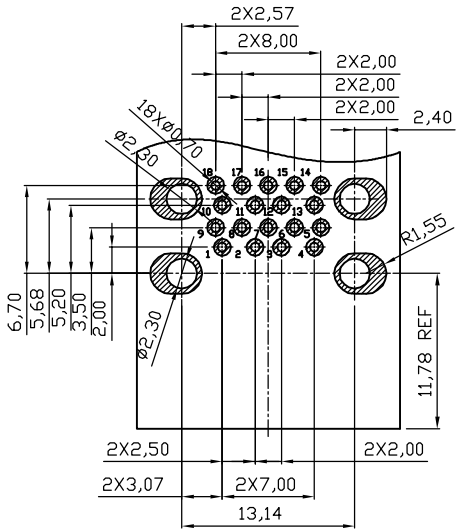

RECOMMENDED P.C.B LAYOUT
TOLERANCES: ±0.05 mm

NOTES:
Material :
Housing:Thermal Plastic UL94HB Color:Blue(pANTONE 300C)
Contacts:Copper alloy ,30u" Gold plating over Nickel(50u"~100u")on Contact area;
Tin Plating(100u"~200u") on Solder Tail.
Shell: Copper alloy, Tin Plating(Bright).
②Electronic Characteristic :
Current Rating:
1.8Amp (Max) Shall be applied to Vbus pin and its corresponding GND pin.
0.25 Amp (Min) shall be applied to all the other contacts.
Voltage - Rating:30V AC/DC Max.
Mating Cycles: 5,000 cycles min
②Operating temperature: -20°C to +85°C
Packing: Tray

RoHS compliant
Unit: mm

Scale	Free
TOLERANCE	
X.	±0.50
X.X	±0.30
X.XX	±0.20
DIM	TOL
X.°	±5°
X.X°	±x°
Angle	TOL

Id.	Modification	Date	Name
②	Add Electronic data&operating temp.	06.03.2017	Winnie
①	Add the"USB3.0 COMPLIANT"	24.03.2014	Winnie
⓪	Drawn	01.07.2011	Jason

	Date	Name
Drawn	01.07.2011	Jason
Approved	06.03.2017	Winnie

ASSMANN WSW components

Customer-No.

ASSMANN WSW-No.
A-USB3 A-2P

Drawing-No.
ASS 4530 CO
rev02

Replace
1/2

SV24

Downloaded from Arrow.com.

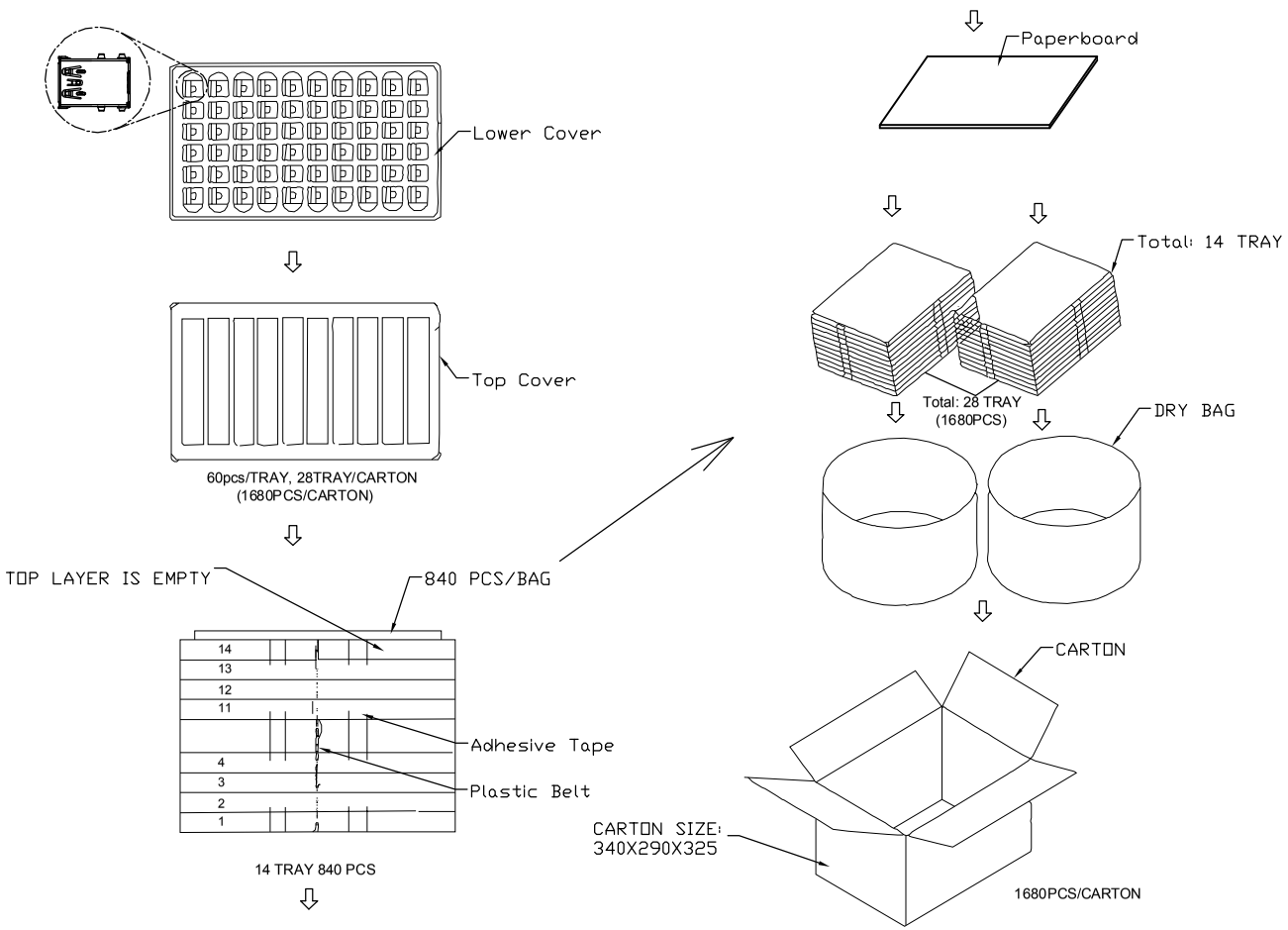

NOTES:
1. MATERIAL: PS
2. PACKING: 60PCS/TRAY, 1680PCS/CARTON
3. All Material in According with the Rohs Environment Related Substances List Controlled

RoHS compliant
Unit: mm

Scale	Free						Date	Name	Customer-No.
TOLERANCE						Drawn	01.07.2011	Jason	
X.	±0.50					Approved	06.03.2017	Winnie	ASSMANN WSW-No. A-USB3 A-2P
X.X	±0.30								
X.XX	±0.20	②	Add Electronic data&operating temp.	06.03.2017	Winnie				Drawing-No. ASS 4530 CO rev02
DIM	TOL	①	Add the"USB3.0 COMPLIANT"	24.03.2014	Winnie				
X.°	±5°								
X.X°	±x°	⓪	Drawn	01.07.2011	Jason				Replace 2/2
Angle	TOL	Id.	Modification	Date	Name				

ASSMANN WSW components

SV24

Downloaded from Arrow.com.