RA6M4 Group
Renesas Microcontrollers

R01DS0365EJ0160
Rev.1.60
Mar 27, 2026

High-performance 200 MHz Arm Cortex-M33 core, up to 1 MB code flash memory with Dual-bank, background and SWAP operation, 8 KB Data flash memory, and 256 KB SRAM with Parity/ECC. High-integration with Ethernet MAC controller, USB 2.0 Full-Speed, SDHI, Quad and Octa SPI, and advanced analog. Integrated Secure Crypto Engine with cryptography accelerators, key management support, tamper detection and power analysis resistance in concert with Arm TrustZone for integrated secure element functionality.

Features

Arm® Cortex®-M33 Core

- Armv8-M architecture with the main extension
- Maximum operating frequency: 200 MHz
- Arm Memory Protection Unit (Arm MPU)
  - Protected Memory System Architecture (PMSAv8)
  - Secure MPU (MPU_S): 8 regions
  - Non-secure MPU (MPU_NS): 8 regions
- SysTick timer
  - Embeds two Systick timers: Secure and Non-secure instance
  - Driven by LOCO or system clock
- CoreSight™ ETM-M33

Memory

- Up to 1-MB code flash memory
- 8-KB data flash memory (100,000 program/erase (P/E) cycles)
- 256-KB SRAM

Connectivity

- Serial Communications Interface (SCI) × 10
  - Asynchronous interfaces
  - 8-bit clock synchronous interface
  - Smart card interface
  - Simple IIC
  - Simple SPI
  - Manchester coding (SCI3, SCI4)
- I^2C bus interface (IIC) × 2
- Serial Peripheral Interface (SPI) × 2
- Quad Serial Peripheral Interface (QSPI)
- Octa Serial Peripheral Interface (OSPI)
- USB 2.0 Full-Speed Module (USBFS)
- Control Area Network module (CAN) × 2
- Ethernet MAC/DMA Controller (ETHERC/EDMAC)
- SD/MMC Host Interface (SDHI)
- Serial Sound Interface Enhanced (SSIE)

Analog

- 12-bit A/D Converter (ADC12) × 2
  - 5 Msps at interleaving
- 12-bit D/A Converter (DAC12) × 2
- Temperature Sensor (TSN)

Timers

- General PWM Timer 32-bit (GPT32) × 4
- General PWM Timer 16-bit (GPT16) × 6
- Low Power Asynchronous General Purpose Timer (AGT) × 6

Security and Encryption

- Secure Crypto Engine 9
  - Symmetric algorithms: AES
  - Asymmetric algorithms: RSA, ECC, and DSA
  - Hash-value generation: SHA224, SHA256, GHASH
  - 128-bit unique ID
- Arm® TrustZone®
  - Up to three or six regions for the code flash, depending on the bank mode
  - Up to two regions for the data flash
  - Up to three regions for the SRAM
  - Individual secure or non-secure security attribution for each peripheral
- Device lifecycle management
- Pin function
  - Up to three tamper pins
  - Secure pin multiplexing

System and Power Management

- Low power modes
- Battery backup function (VBATT)
- Realtime Clock (RTC) with calendar and VBATT support
- Event Link Controller (ELC)
- Data Transfer Controller (DTC)
- DMA Controller (DMAC) × 8
- Power-on reset
- Low Voltage Detection (LVD) with voltage settings
- Watchdog Timer (WDT)
- Independent Watchdog Timer (IWDT)

Human Machine Interface (HMI)

- Capacitive Touch Sensing Unit (CTSU)

Multiple Clock Sources

- Main clock oscillator (MOSC) (8 to 24 MHz)
- Sub-clock oscillator (SOSC) (32.768 kHz)
- High-speed on-chip oscillator (HOCO) (16/18/20 MHz)
- Middle-speed on-chip oscillator (MOCO) (8 MHz)
- Low-speed on-chip oscillator (LOCO) (32.768 kHz)
- IWDT-dedicated on-chip oscillator (15 kHz)
- Clock trim function for HOCO/MOCO/LOCO
- PLL/PLL2
- Clock out support

General-Purpose I/O Ports

- 5-V tolerance, open drain, input pull-up, switchable driving ability

Operating Voltage

- VCC: 2.7 to 3.6 V

Operating Temperature and Packages

- Ta = -40°C to +105°C
  - 144-pin LQFP (20 mm × 20 mm, 0.5 mm pitch)
  - 100-pin LQFP (14 mm × 14 mm, 0.5 mm pitch)
  - 64-pin LQFP (10 mm × 10 mm, 0.5 mm pitch)
  - 144-pin BGA (7 mm × 7 mm, 0.50 mm pitch)
  - 64-pin BGA (6 mm × 6 mm, 0.65 mm pitch)

Downloaded from Arrow.com.

1. Overview

The MCU integrates multiple series of software- and pin-compatible Arm®-based 32-bit cores that share a common set of Renesas peripherals to facilitate design scalability and efficient platform-based product development.

The MCU in this series incorporates a high-performance Arm Cortex®-M33 core running up to 200 MHz with the following features:

- Up to 1 MB code flash memory
- 256 KB SRAM
- Quad Serial Peripheral Interface (QSPI), Octa Serial Peripheral Interface (OSPI)
- Ethernet MAC Controller (ETHERC), USBFS, SD/MMC Host Interface
- Capacitive Touch Sensing Unit (CTSU)
- Analog peripherals
- Security and safety features

1.1 Function Outline

Table 1.1 Arm core

Feature	Functional description
Arm Cortex-M33 core	• Maximum operating frequency: up to 200 MHz • Arm Cortex-M33 core: – Armv8-M architecture with security extension – Revision: r0p4-00rel0 • Arm Memory Protection Unit (Arm MPU) – Protected Memory System Architecture (PMSAv8) – Secure MPU (MPU_S): 8 regions – Non-secure MPU (MPU_NS): 8 regions • SysTick timer – Embeds two Systick timers: Secure and Non-secure instance – Driven by SysTick timer clock (SYSTICCLK) or system clock (ICLK) • CoreSight™ ETM-M33

Table 1.2 Memory

Feature	Functional description
Code flash memory	Maximum 1 MB of code flash memory.
Data flash memory	8 KB of data flash memory.
Option-setting memory	The option-setting memory determines the state of the MCU after a reset.
SRAM	On-chip high-speed SRAM with either parity bit or Error Correction Code (ECC).

Table 1.3 System (1 of 2)

Feature	Functional description
Operating modes	Two operating modes: • Single-chip mode • SCI/USB boot mode
Resets	The MCU provides 14 resets.
Low Voltage Detection (LVD)	The Low Voltage Detection (LVD) module monitors the voltage level input to the VCC pin. The detection level can be selected by register settings. The LVD module consists of three separate voltage level detectors (LVD0, LVD1, LVD2). LVD0, LVD1, and LVD2 measure the voltage level input to the VCC pin. LVD registers allow your application to configure detection of VCC changes at various voltage thresholds.

Downloaded from Arrow.com.

Table 1.3 System (2 of 2)

Feature	Functional description
Clocks	• Main clock oscillator (MOSC) • Sub-clock oscillator (SOSC) • High-speed on-chip oscillator (HOCO) • Middle-speed on-chip oscillator (MOCO) • Low-speed on-chip oscillator (LOCO) • IWDT-dedicated on-chip oscillator • PLL/PLL2 • Clock out support
Clock Frequency Accuracy Measurement Circuit (CAC)	The Clock Frequency Accuracy Measurement Circuit (CAC) counts pulses of the clock to be measured (measurement target clock) within the time generated by the clock selected as the measurement reference (measurement reference clock), and determines the accuracy depending on whether the number of pulses is within the allowable range. When measurement is complete or the number of pulses within the time generated by the measurement reference clock is not within the allowable range, an interrupt request is generated.
Interrupt Controller Unit (ICU)	The Interrupt Controller Unit (ICU) controls which event signals are linked to the Nested Vector Interrupt Controller (NVIC), the DMA Controller (DMAC), and the Data Transfer Controller (DTC) modules. The ICU also controls non-maskable interrupts.
Low power modes	Power consumption can be reduced in multiple ways, including setting clock dividers, stopping modules, selecting power control mode in normal operation, and transitioning to low power modes.
Battery backup function	A battery backup function is provided for partial powering by a battery. The battery-powered area includes the RTC, SOSC, backup memory, and switch between VCC and VBATT.
Register write protection	The register write protection function protects important registers from being overwritten due to software errors. The registers to be protected are set with the Protect Register (PRCR).
Memory Protection Unit (MPU)	The MCU has one Memory Protection Unit (MPU).

Table 1.4 Event link

Feature	Functional description
Event Link Controller (ELC)	The Event Link Controller (ELC) uses the event requests generated by various peripheral modules as source signals to connect them to different modules, allowing direct link between the modules without CPU intervention.

Table 1.5 Direct memory access

Feature	Functional description
Data Transfer Controller (DTC)	A Data Transfer Controller (DTC) module is provided for transferring data when activated by an interrupt request.
DMA Controller (DMAC)	The MCU includes an 8-channel direct memory access controller (DMAC) that can transfer data without intervention from the CPU. When a DMA transfer request is generated, the DMAC transfers data stored at the transfer source address to the transfer destination address.

Table 1.6 External bus interface

Feature	Functional description
External bus	• CS area (ECBIU): Connected to the external devices (external memory interface) • QSPI area (EQBIU): Connected to the QSPI (external device interface) • OSPI area (EOBIU): Connected to the OSPI (external device interface)

Table 1.7 Timers (1 of 2)

Feature	Functional description
General PWM Timer (GPT)	The General PWM Timer (GPT) is a 32-bit timer with GPT32 × 4 channels and a 16-bit timer with GPT16 × 6 channels. PWM waveforms can be generated by controlling the up-counter, down-counter, or the up- and down-counter. In addition, PWM waveforms can be generated for controlling brushless DC motors. The GPT can also be used as a general-purpose timer.
Port Output Enable for GPT (POEG)	The Port Output Enable (POEG) function can place the General PWM Timer (GPT) output pins in the output disable state

Downloaded from Arrow.com.

Table 1.7 Timers (2 of 2)

Feature	Functional description
Low Power Asynchronous General Purpose Timer (AGT)	The Low Power Asynchronous General Purpose Timer (AGT) is a 16-bit timer that can be used for pulse output, external pulse width or period measurement, and counting external events. This timer consists of a reload register and a down counter. The reload register and the down counter are allocated to the same address, and can be accessed with the AGT register.
Realtime Clock (RTC)	The realtime clock (RTC) has two counting modes, calendar count mode and binary count mode, that are used by switching register settings. For calendar count mode, the RTC has a 100-year calendar from 2000 to 2099 and automatically adjusts dates for leap years. For binary count mode, the RTC counts seconds and retains the information as a serial value. Binary count mode can be used for calendars other than the Gregorian (Western) calendar.
Watchdog Timer (WDT)	The Watchdog Timer (WDT) is a 14-bit down counter that can be used to reset the MCU when the counter underflows because the system has run out of control and is unable to refresh the WDT. In addition, the WDT can be used to generate a non-maskable interrupt or an underflow interrupt.
Independent Watchdog Timer (IWDT)	The Independent Watchdog Timer (IWDT) consists of a 14-bit down counter that must be serviced periodically to prevent counter underflow. The IWDT provides functionality to reset the MCU or to generate a non-maskable interrupt or an underflow interrupt. Because the timer operates with an independent, dedicated clock source, it is particularly useful in returning the MCU to a known state as a fail-safe mechanism when the system runs out of control. The IWDT can be triggered automatically by a reset, underflow, refresh error, or a refresh of the count value in the registers.

Table 1.8 Communication interfaces (1 of 2)

Feature	Functional description
Serial Communications Interface (SCI)	The Serial Communications Interface (SCI) × 10 channels have asynchronous and synchronous serial interfaces: ● Asynchronous interfaces (UART and Asynchronous Communications Interface Adapter (ACIA)) ● 8-bit clock synchronous interface ● Simple IIC (master-only) ● Simple SPI ● Smart card interface ● Manchester interface ● Extended Serial interface The smart card interface complies with the ISO/IEC 7816-3 standard for electronic signals and transmission protocol. SCIn (n = 0, 3 to 9) has FIFO buffers to enable continuous and full-duplex communication, and the data transfer speed can be configured independently using an on-chip baud rate generator.
I^2C bus interface (IIC)	The I^2C bus interface (IIC) has 2 channels. The IIC module conforms with and provides a subset of the NXP I^2C (Inter-Integrated Circuit) bus interface functions.
Serial Peripheral Interface (SPI)	The Serial Peripheral Interface (SPI) has 2 channels. The SPI provides high-speed full-duplex synchronous serial communications with multiple processors and peripheral devices.
Control Area Network (CAN)	The Controller Area Network (CAN) module uses a message-based protocol to receive and transmit data between multiple slaves and masters in electromagnetically noisy applications. The module complies with the ISO 11898-1 (CAN 2.0A/CAN 2.0B) standard and supports up to 32 mailboxes, which can be configured for transmission or reception in normal mailbox and FIFO modes. Both standard (11-bit) and extended (29-bit) messaging formats are supported. The CAN module requires an additional external CAN transceiver.
USB 2.0 Full-Speed module (USBFS)	The USB 2.0 Full-Speed module (USBFS) can operate as a host controller or device controller. The module supports full-speed and low-speed (host controller only) transfer as defined in Universal Serial Bus Specification 2.0. The module has an internal USB transceiver and supports all of the transfer types defined in Universal Serial Bus Specification 2.0. The USB has buffer memory for data transfer, providing a maximum of 10 pipes. Pipes 1 to 9 can be assigned any endpoint number based on the peripheral devices used for communication or based on your system.
Quad Serial Peripheral Interface (QSPI)	The Quad Serial Peripheral Interface (QSPI) is a memory controller for connecting a serial ROM (nonvolatile memory such as a serial flash memory, serial EEPROM, or serial FeRAM) that has an SPI-compatible interface.
Octa Serial Peripheral Interface (OSPI)	The Octa Serial Peripheral Interface (OSPI) module is a memory controller for connecting OctaFlash and OctaRAM.

Downloaded from Arrow.com.

Table 1.8 Communication interfaces (2 of 2)

Feature	Functional description
Serial Sound Interface Enhanced (SSIE)	The Serial Sound Interface Enhanced (SSIE) peripheral provides functionality to interface with digital audio devices for transmitting I^2S/Monaural/TDM audio data over a serial bus. The SSIE supports an audio clock frequency of up to 50 MHz, and can be operated as a slave or master receiver, transmitter, or transceiver to suit various applications. The SSIE includes 32-stage FIFO buffers in the receiver and transmitter, and supports interrupts and DMA-driven data reception and transmission.
SD/MMC Host Interface (SDHI)	The SDHI and MultiMediaCard (MMC) interface module provides the functionality required to connect a variety of external memory cards to the MCU. The SDHI supports both 1- and 4-bit buses for connecting memory cards that support SD, SDHC, and SDXC formats. When developing host devices that are compliant with the SD Specifications, you must comply with the SD Host/Ancillary Product License Agreement (SD HALA). The MMC interface supports 1-bit, 4-bit, and 8-bit MMC buses that provide eMMC 4.51 (JEDEC Standard JESD 84-B451) device access. This interface also provides backward compatibility and supports high-speed SDR transfer modes.
Ethernet MAC (ETHERC)	One-channel Ethernet MAC Controller (ETHERC) compliant with the Ethernet/IEEE802.3 Media Access Control (MAC) layer protocol. An ETHERC channel provides one channel of the MAC layer interface, connecting the MCU to the physical layer LSI (PHY-LSI) that allows transmission and reception of frames compliant with the Ethernet and IEEE802.3 standards. The ETHERC is connected to the Ethernet DMA Controller (EDMAC) so data can be transferred without using the CPU.

Table 1.9 Analog

Feature	Functional description
12-bit A/D Converter (ADC12)	Two units of 12-bit successive approximation A/D converter (ADC12) are provided. Analog input channels are selectable up to 12 in unit 0 and up to 10 in unit 1. Each 3 analog input of unit 0 and unit 1 is assigned to the same port (AN000/AN100, AN001/AN101, and AN002/AN102), and up to 19 ports are available as analog input. The temperature sensor output and an internal reference voltage are selectable for conversion in each unit 0 and unit 1.
12-bit D/A Converter (DAC12)	A 12-bit D/A converter (DAC12) is provided.
Temperature Sensor (TSN)	The on-chip Temperature Sensor (TSN) determines and monitors the die temperature for reliable operation of the device. The sensor outputs a voltage directly proportional to the die temperature, and the relationship between the die temperature and the output voltage is fairly linear. The output voltage is provided to the ADC12 for conversion and can be further used by the end application.

Table 1.10 Human machine interfaces

Feature	Functional description
Capacitive Touch Sensing Unit (CTSU)	The Capacitive Touch Sensing Unit (CTSU) measures the electrostatic capacitance of the touch sensor. Changes in the electrostatic capacitance are determined by software that enables the CTSU to detect whether a finger is in contact with the touch sensor. The electrode surface of the touch sensor is usually enclosed with an electrical conductor so that a finger does not come into direct contact with the electrode.

Table 1.11 Data processing

Feature	Functional description
Cyclic Redundancy Check (CRC) calculator	The Cyclic Redundancy Check (CRC) generates CRC codes to detect errors in the data. The bit order of CRC calculation results can be switched for LSB-first or MSB-first communication. Additionally, various CRC-generation polynomials are available.
Data Operation Circuit (DOC)	The Data Operation Circuit (DOC) compares, adds, and subtracts 16-bit data. When a selected condition applies, 16-bit data is compared and an interrupt can be generated.

Downloaded from Arrow.com.

Table 1.12 Security

Feature	Functional description
Security function	• ARMv8-M TrustZone security • Device lifecycle management • Debug access level • Key injection • Secure pin multiplexing
Secure Crypto Engine 9 (SCE9)	• Symmetric algorithms: AES • Asymmetric algorithms: RSA, ECC, and DSA • Hash-value generation: SHA224, SHA256, GHASH • 128-bit unique ID.

Table 1.13 I/O ports

Feature	Functional description
Programmable I/O ports	• I/O ports for the 144-pin LQFP – I/O pins: 109 – Input pins: 1 – Pull-up resistors: 110 – N-ch open-drain outputs: 109 – 5-V tolerance: 21 • I/O ports for the 144-pin BGA – I/O pins: 109 – Input pins: 1 – Pull-up resistors: 110 – N-ch open-drain outputs: 109 – 5-V tolerance: 21 • I/O ports for the 100-pin LQFP – I/O pins: 75 – Input pins: 1 – Pull-up resistors: 76 – N-ch open-drain outputs: 75 – 5-V tolerance: 14 • I/O ports for the 64-pin LQFP – I/O pins: 41 – Input pins: 1 – Pull-up resistors: 42 – N-ch open-drain outputs: 41 – 5-V tolerance: 9 • I/O ports for the 64-pin BGA – I/O pins: 45 – Input pins: 1 – Pull-up resistors: 46 – N-ch open-drain outputs: 45 – 5-V tolerance: 9

Downloaded from Arrow.com.

1.2 Block Diagram

Figure 1.1 shows a block diagram of the MCU superset. Some individual devices within the group have a subset of the features.

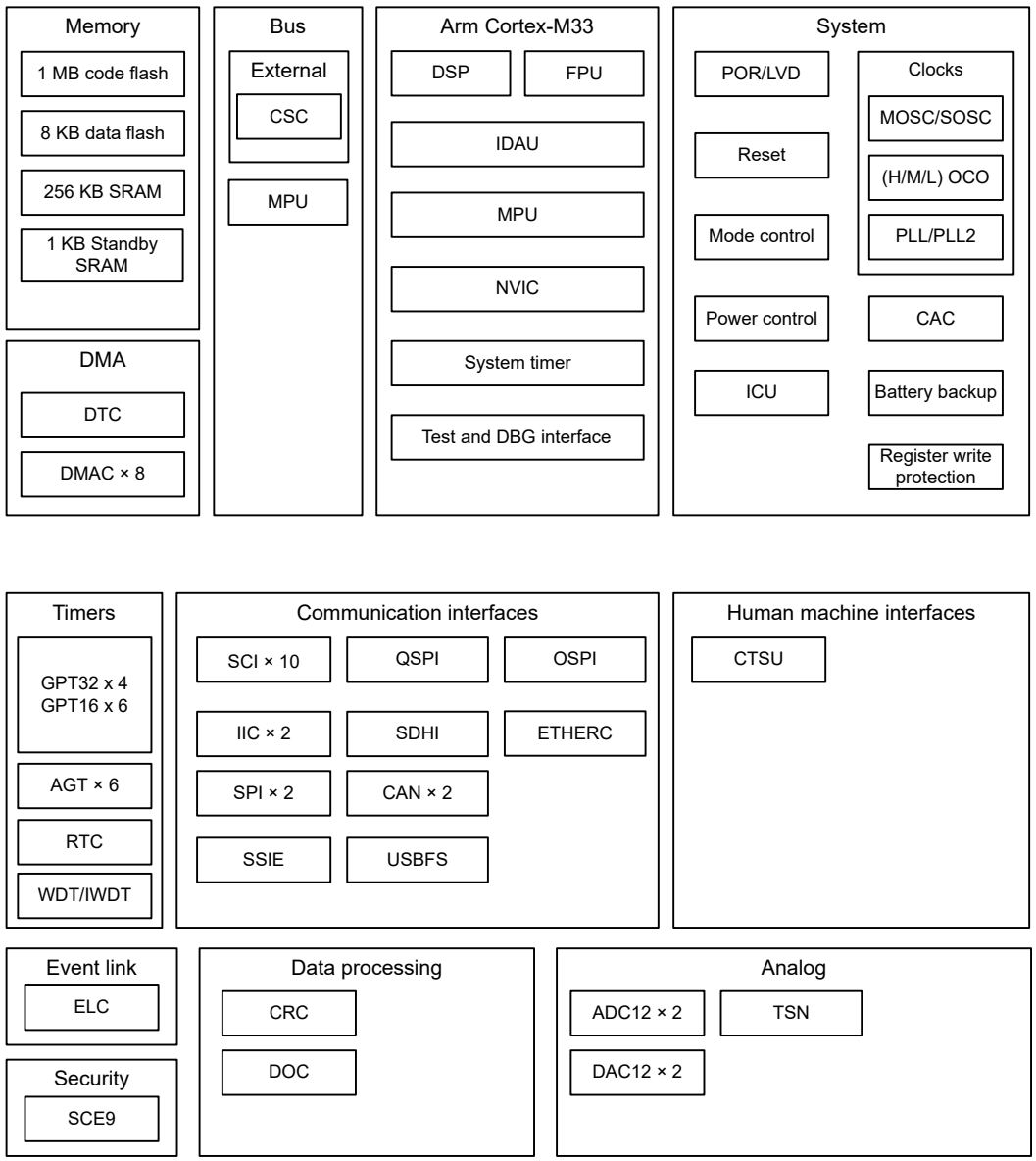

Note: Not available on all parts.

Figure 1.1 Block diagram

1.3 Part Numbering

Figure 1.2 shows the product part number information, including memory capacity and package type. Table 1.14 shows a list of products.

Downloaded from Arrow.com.

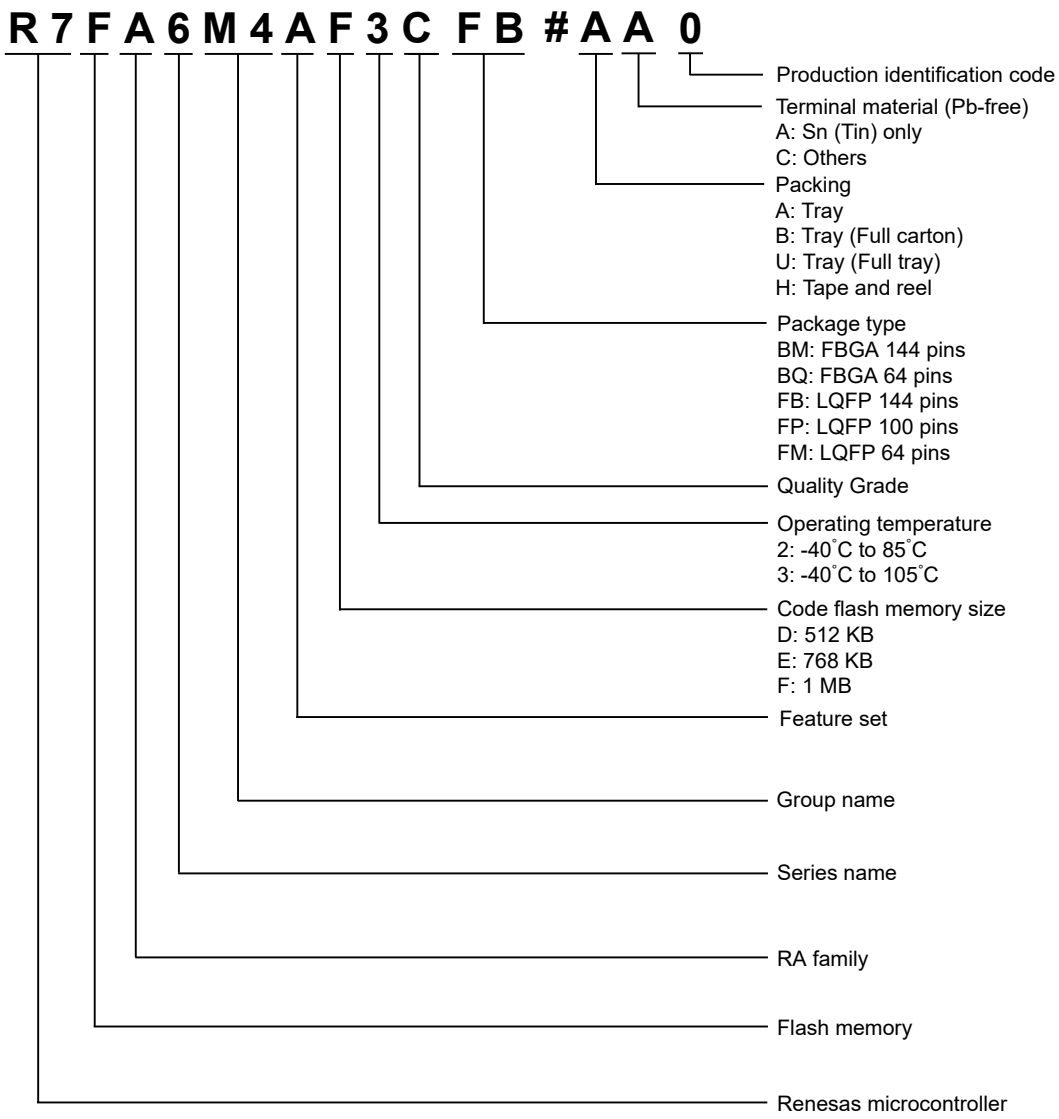

Note: Check the order screen for each product on the Renesas website for valid symbols after the #.

Figure 1.2 Part numbering scheme

Table 1.14 Product list (1 of 2)

Product part number	Package code	Code flash	Data flash	SRAM	Operating temperature
R7FA6M4AF2CBM	PLBG0144KB-A	1 MB	8 KB	256 KB	-40 to +85°C
R7FA6M4AF3CBM	PLBG0144KB-A				-40 to +105°C
R7FA6M4AF3CFB	PLQP0144KA-B				
R7FA6M4AF3CFP	PLQP0100KB-B				
R7FA6M4AF2CBQ	PLBG0064JC-A				-40 to +85°C
R7FA6M4AF3CBQ	PLBG0064JC-A				-40 to +105°C
R7FA6M4AF3CFM	PLQP0064KB-C				

Downloaded from Arrow.com.

Table 1.14 Product list (2 of 2)

Product part number	Package code	Code flash	Data flash	SRAM	Operating temperature
R7FA6M4AE2CBM	PLBG0144KB-A	768 KB	8 KB	256 KB	-40 to +85°C
R7FA6M4AE3CBM	PLBG0144KB-A				-40 to +105°C
R7FA6M4AE3CFB	PLQP0144KA-B				
R7FA6M4AE3CFP	PLQP0100KB-B				
R7FA6M4AE2CBQ	PLBG0064JC-A				-40 to +85°C
R7FA6M4AE3CBQ	PLBG0064JC-A				-40 to +105°C
R7FA6M4AE3CFM	PLQP0064KB-C				
R7FA6M4AD2CBM	PLBG0144KB-A	512 KB	8 KB	256 KB	-40 to +85°C
R7FA6M4AD3CBM	PLBG0144KB-A				-40 to +105°C
R7FA6M4AD3CFB	PLQP0144KA-B				
R7FA6M4AD3CFP	PLQP0100KB-B				
R7FA6M4AD2CBQ	PLBG0064JC-A				-40 to +85°C
R7FA6M4AD3CBQ	PLBG0064JC-A				-40 to +105°C
R7FA6M4AD3CFM	PLQP0064KB-C				

Downloaded from Arrow.com.

1.4 Function Comparison

Table 1.15 Function Comparison (1 of 2)

Parts number		R7FA6M4AXXCFB	R7FA6M4AXXCBM	R7FA6M4AXXCFP	R7FA6M4AXXCFM	R7FA6M4AXXCBQ
Pin count		144		100	64	
Package		LQFP	BGA	LQFP		BGA
Code flash memory		1 MB 768 KB 512 KB				
Data flash memory		8 KB				
SRAM		256 KB				
	Parity	192 KB				
	ECC	64 KB				
Standby SRAM		1 KB				
DMA	DTC	Yes				
	DMAC	8				
BUS	External bus	16-bit bus		8-bit bus	No	
System	CPU clock	200 MHz (max.)				
	CPU clock sources	MOSC, SOSC, HOCO, MOCO, LOCO, PLL				
	CAC	Yes				
	WDT/IWDT	Yes				
	Backup register	128 B				
Communication	SCI	10			8	
	IIC	2				
	SPI	2				
	CAN	2				
	USBFS	Yes				
	QSPI	Yes				
	OSPI	Yes			No	
	SSIE	Yes			No	Yes
	SDHI/MMC	Yes			No	
	ETHERC	Yes		Yes[*3]	No	
Timers	GPT32[*1]	4				
	GPT16[*1]	6				
	AGT[*1]	6				
	RTC	Yes				
Analog	ADC12	Unit 0: 12 Unit 1: 10 Shared channel pin: 3[*2]		Unit 0: 11 Unit 1: 9 Shared channel pin: 3[*2]	Unit 0: 7 Unit 1: 4 Shared channel pin: 3[*2]	
	DAC12	2				
	TSN	Yes				
HMI	CTSU	20		12	7	

Downloaded from Arrow.com.

Table 1.15 Function Comparison (2 of 2)

Parts number		R7FA6M4AXXCFB	R7FA6M4AXXCBM	R7FA6M4AXXCFP	R7FA6M4AXXCFM	R7FA6M4AXXCBQ
Data processing	CRC	Yes				
	DOC	Yes				
Event control	ELC	Yes				
Security		SCE9, TrustZone, and Lifecycle management				
I/O ports	I/O pins	109	109	75	41	45
	Input pins	1	1	1	1	1
	Pull-up resistors	110	110	76	42	46
	N-ch open-drain outputs	109	109	75	41	45
	5-V tolerance	21	21	14	9	9

Note 1. Available pins depend on the pin count. For details, see section 1.7. Pin Lists.
Note 2. Some input channels of the ADC units share the same port pin.
Note 3. Available for RMII only.

Downloaded from Arrow.com.

1.5 Pin Functions

Table 1.16 Pin functions (1 of 6)

Function	Signal	I/O	Description
Power supply	VCC	Input	Power supply pin. Connect it to the system power supply. Connect this pin to VSS by a 0.1-μF capacitor. The capacitor should be placed close to the pin.
	VCL/VCL0	I/O	Connect this pin to the VSS pin by the smoothing capacitor used to stabilize the internal power supply. Place the capacitor close to the pin.
	VBATT	Input	Battery Backup power pin
	VSS	Input	Ground pin. Connect it to the system power supply (0 V).
Clock	XTAL	Output	Pins for a crystal resonator. An external clock signal can be input through the EXTAL pin.
	EXTAL	Input	
	XCIN	Input	Input/output pins for the sub-clock oscillator. Connect a crystal resonator between XCOUT and XCIN.
	XCOUT	Output	
	CLKOUT	Output	Clock output pin
Operating mode control	MD	Input	Pin for setting the operating mode. The signal level on this pin must not be changed during operation mode transition on release from the reset state.
System control	RES	Input	Reset signal input pin. The MCU enters the reset state when this signal goes low.
CAC	CACREF	Input	Measurement reference clock input pin
On-chip emulator	TMS	Input	On-chip emulator or boundary scan pins
	TDI	Input	
	TCK	Input	
	TDO	Output	
	TCLK	Output	Output clock for synchronization with the trace data
	TDATA0 to TDATA3	Output	Trace data output
	SWO	Output	Serial wire trace output pin
	SWDIO	I/O	Serial wire debug data input/output pin
	SWCLK	Input	Serial wire clock pin
Interrupt	NMI	Input	Non-maskable interrupt request pin
	IRQn	Input	Maskable interrupt request pins
	IRQn-DS	Input	Maskable interrupt request pins that can also be used in Deep Software Standby mode

Downloaded from Arrow.com.

Table 1.16 Pin functions (2 of 6)

Function	Signal	I/O	Description
External bus interface	RD	Output	Strobe signal indicating that reading from the external bus interface space is in progress, active-low
	WR	Output	Strobe signal indicating that writing to the external bus interface space is in progress, in 1-write strobe mode, active-low
	WRn	Output	Strobe signals indicating that either group of data bus pins (D07 to D00 or D15 to D08) is valid in writing to the external bus interface space, in byte strobe mode, active-low
	BCn	Output	Strobe signals indicating that either group of data bus pins (D07 to D00 or D15 to D08) is valid in access to the external bus interface space, in 1-write strobe mode, active-low
	ALE	Output	Address latch signal when address/data multiplexed bus is selected
	WAIT	Input	Input pin for wait request signals in access to the external space, active-low
	CSn	Output	Select signals for CS areas, active-low
	A00 to A20	Output	Address bus
	D00 to D15	I/O	Data bus
	A00/D00 to A15/D15	I/O	Address/data multiplexed bus
GPT	GTETRGA, GTETRGB, GTETRGC, GTETRGD	Input	External trigger input pins
	GTIOCnA, GTIOCnB	I/O	Input capture, output compare, or PWM output pins
	GTIU	Input	Hall sensor input pin U
	GTIV	Input	Hall sensor input pin V
	GTIW	Input	Hall sensor input pin W
	GTOUUP	Output	3-phase PWM output for BLDC motor control (positive U phase)
	GTOULO	Output	3-phase PWM output for BLDC motor control (negative U phase)
	GTOVUP	Output	3-phase PWM output for BLDC motor control (positive V phase)
	GTOVLO	Output	3-phase PWM output for BLDC motor control (negative V phase)
	GTOWUP	Output	3-phase PWM output for BLDC motor control (positive W phase)
	GTOWLO	Output	3-phase PWM output for BLDC motor control (negative W phase)
AGT	AGTEEn	Input	External event input enable signals
	AGTIOn	I/O	External event input and pulse output pins
	AGTOn	Output	Pulse output pins
	AGTOAn	Output	Output compare match A output pins
	AGTOBn	Output	Output compare match B output pins
RTC	RTCOUT	Output	Output pin for 1-Hz or 64-Hz clock
	RTCICn	Input	Time capture event input pins

Downloaded from Arrow.com.

Table 1.16 Pin functions (3 of 6)

Function	Signal	I/O	Description
SCI	SCKn	I/O	Input/output pins for the clock (clock synchronous mode)
	RXDn	Input	Input pins for received data (asynchronous mode/clock synchronous mode)
	TXDn	Output	Output pins for transmitted data (asynchronous mode/clock synchronous mode)
	CTSn_RTSn	I/O	Input/output pins for controlling the start of transmission and reception (asynchronous mode/clock synchronous mode), active-low.
	CTSn	Input	Input for the start of transmission.
	SCLn	I/O	Input/output pins for the IIC clock (simple IIC mode)
	SDAn	I/O	Input/output pins for the IIC data (simple IIC mode)
	SCKn	I/O	Input/output pins for the clock (simple SPI mode)
	MISOn	I/O	Input/output pins for slave transmission of data (simple SPI mode)
	MOSIn	I/O	Input/output pins for master transmission of data (simple SPI mode)
	RXDXn	Input	Input pins for received data (Extended Serial Mode)
	TXDXn	Output	Output pins for transmitted data (Extended Serial Mode)
	SIOXn	I/O	Input/output pins for received or transmitted data (Extended Serial Mode)
	SSn	Input	Chip-select input pins (simple SPI mode), active-low
IIC	SCLn	I/O	Input/output pins for the clock
	SDAn	I/O	Input/output pins for data
SPI	RSPCKA, RSPCKB	I/O	Clock input/output pin
	MOSIA, MOSIB	I/O	Input or output pins for data output from the master
	MISOA, MISOB	I/O	Input or output pins for data output from the slave
	SSLA0, SSLB0	I/O	Input or output pin for slave selection
	SSLA1 to SSLA3, SSLB1 to SSLB3	Output	Output pins for slave selection
CAN	CRXn	Input	Receive data
	CTXn	Output	Transmit data

Downloaded from Arrow.com.

Table 1.16 Pin functions (4 of 6)

Function	Signal	I/O	Description
USBFS	VCC_USB	Input	Power supply pin
	VSS_USB	Input	Ground pin
	USB_DP	I/O	D+ pin of the USB on-chip transceiver. Connect this pin to the D+ pin of the USB bus.
	USB_DM	I/O	D- pin of the USB on-chip transceiver. Connect this pin to the D- pin of the USB bus.
	USB_VBUS	Input	USB cable connection monitor pin. Connect this pin to VBUS of the USB bus. The VBUS pin status (connected or disconnected) can be detected when the USB module is operating as a function controller.
	USB_EXICEN	Output	Low-power control signal for external power supply (OTG) chip
	USB_VBUSEN	Output	VBUS (5 V) supply enable signal for external power supply chip
	USB_OVRCURA, USB_OVRCURB	Input	Connect the external overcurrent detection signals to these pins. Connect the VBUS comparator signals to these pins when the OTG power supply chip is connected.
	USB_OVRCURA-DS, USB_OVRCURB-DS	Input	Overcurrent pins for USBFS that can also be used in Deep Software Standby mode. Connect the external overcurrent detection signals to these pins. Connect the VBUS comparator signals to these pins when the OTG power supply chip is connected.
	USB_ID	Input	Connect the MicroAB connector ID input signal to this pin during operation in OTG mode
QSPI	QSPCLK	Output	QSPI clock output pin
	QSSL	Output	QSPI slave output pin
	QIO0 to QIO3	I/O	Data0 to Data3
OSPI	OM_SCLK	Output	Clock output (OCTACLK divided by 2)
	OM_CSn	Output	Chip select signal for an OctaFlash device, active-low
	OM_DQS	I/O	Read data strobe/write data mask signal
	OM_SIOn	I/O	Data input/output
	OM_RESET	Output	Reset signal for both OctaFlash and OctaRAM devices, active-low
	OM_ECS	Input	ECC error detection signal from the external memory, active-low
SSIE	SSIBCK0	I/O	SSIE serial bit clock pins
	SSILRCK0/SSIFS0	I/O	LR clock/frame synchronization pins
	SSITXD0	Output	Serial data output pin
	SSIRXD0	Input	Serial data input pin
	SSIDATA0	I/O	Serial data input/output pins
	AUDIO_CLK	Input	External clock pin for audio (input oversampling clock)
SDHI/MMC	SD0CLK	Output	SD/MMC clock output pins
	SD0CMD	I/O	Command output pin and response input signal pins
	SD0DAT0 to SD0DAT7	I/O	SD/MMC data bus pins
	SD0CD	Input	SD/MMC card detection pins
	SD0WP	Input	SD/MMC write-protect signals

Downloaded from Arrow.com.

Table 1.16 Pin functions (5 of 6)

Function	Signal	I/O	Description
ETHERC	REF50CK0	Input	50-MHz reference clock. This pin inputs a reference signal for transmission/reception timing in RMII mode.
	RMII0_CRS_DV	Input	Indicates carrier detection signals and valid receive data on RMII0_RXD1 and RMII0_RXD0 in RMII mode .
	RMII0_TXDn	Output	2-bit transmit data in RMII mode
	RMII0_RXDn	Input	2-bit receive data in RMII mode
	RMII0_TXD_EN	Output	Output pin for data transmit enable signal in RMII mode
	RMII0_RX_ER	Input	Indicates an error occurred during reception of data in RMII mode
	ET0_CRS	Input	Carrier detection/data reception enable signal
	ET0_RX_DV	Input	Indicates valid receive data on ET0_ERXD3 to ET0_ERXD0
	ET0_EXOUT	Output	General-purpose external output pin
	ET0_LINKSTA	Input	Input link status from the PHY-LSI
	ET0_ETXDn	Output	4 bits of MII transmit data
	ET0_ERXDn	Input	4 bits of MII receive data
	ET0_TX_EN	Output	Transmit enable signal. Functions as a signal indicating that transmit data is ready on ET0_ETXD3 to ET0_ETXD0.
	ET0_TX_ER	Output	Transmit error pin. Functions as a signal notifying the PHY_LSI of an error during transmission.
	ET0_RX_ER	Output	Receive error pin. Functions as a signal to recognize an error during reception.
	ET0_TX_CLK	Input	Transmit clock pin. This pin inputs a reference signal for output timing from ET0_TX_EN, ET0_ETXD3 to ET0_ETXD0, and ET0_TX_ER.
	ET0_RX_CLK	Input	Receive clock pin. This pin inputs reference signal for input timing to ET0_RX_DV, ET0_ERXD3 to ET0_ERXD0, and ET0_RX_ER.
	ET0_COL	Input	Input collision detection signal
	ET0_WOL	Output	Receive Magic packets
	ET0_MDC	Output	Output reference clock signal for information transfer through ET0_MDIO
	ET0_MDIO	I/O	Input or output bidirectional signal for exchange of management data with PHY-LSI
Analog power supply	AVCC0	Input	Analog voltage supply pin. This is used as the analog power supply for the respective modules. Supply this pin with the same voltage as the VCC pin.
	AVSS0	Input	Analog ground pin. This is used as the analog ground for the respective modules. Supply this pin with the same voltage as the VSS pin.
	VREFH	Input	Analog reference voltage supply pin for the ADC12 (unit 1) and D/A Converter. Connect this pin to AVCC0 when not using the ADC12 (unit 1) and D/A Converter.
	VREFL	Input	Analog reference ground pin for the ADC12 and D/A Converter. Connect this pin to AVSS0 when not using the ADC12 (unit 1) and D/A Converter.
	VREFH0	Input	Analog reference voltage supply pin for the ADC12 (unit 0). Connect this pin to AVCC0 when not using the ADC12 (unit 0).
	VREFL0	Input	Analog reference ground pin for the ADC12. Connect this pin to AVSS0 when not using the ADC12 (unit 0).

Downloaded from Arrow.com.

Table 1.16 Pin functions (6 of 6)

Function	Signal	I/O	Description
ADC12	ANmn	Input	Input pins for the analog signals to be processed by the A/D converter. (m: ADC unit number, n: pin number)
	ADTRGm	Input	Input pins for the external trigger signals that start the A/D conversion, active-low.
DAC12	DAn	Output	Output pins for the analog signals processed by the D/A converter.
CTSU	TSn	Input	Capacitive touch detection pins (touch pins)
	TSCAP	I/O	Secondary power supply pin for the touch driver
I/O ports	Pmn	I/O	General-purpose input/output pins (m: port number, n: pin number)
	P200	Input	General-purpose input pin

Downloaded from Arrow.com.

1.6 Pin Assignments

The following figures show the pin assignments from the top view.

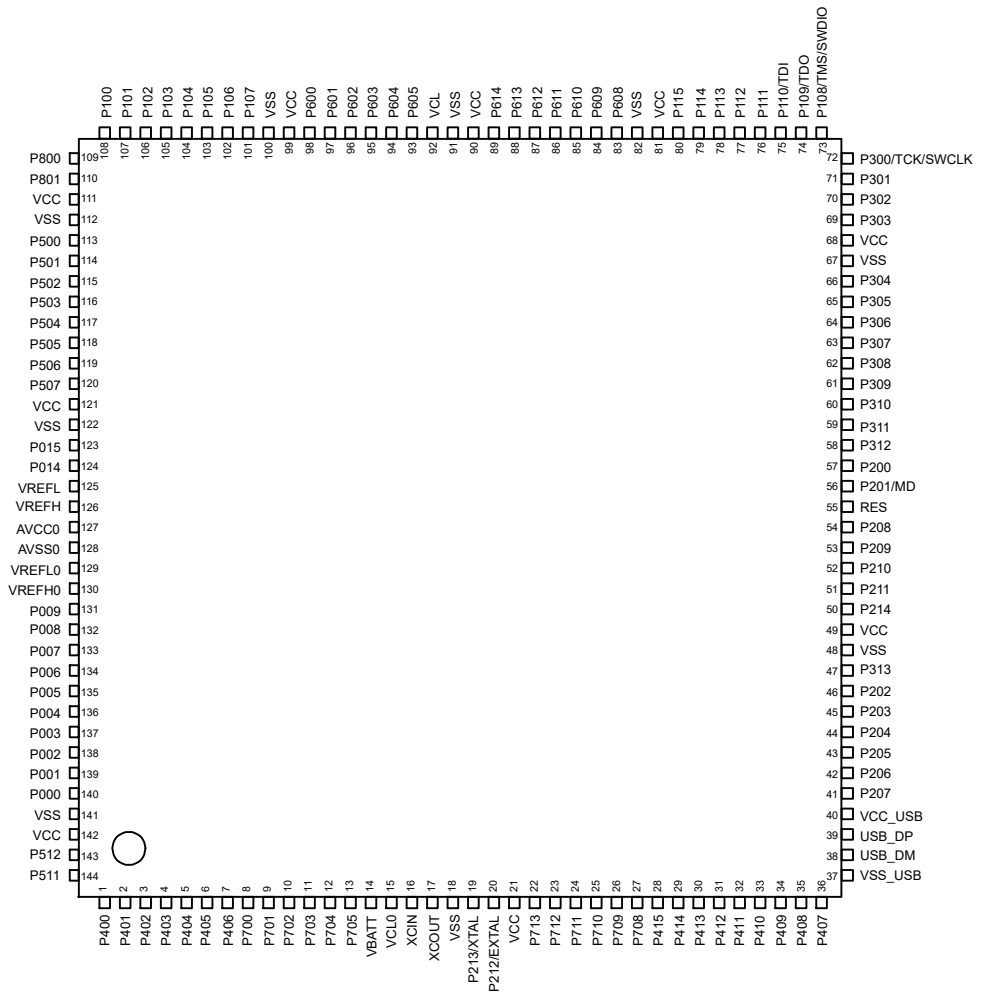

Figure 1.3 Pin assignment for LQFP 144-pin

Downloaded from Arrow.com.

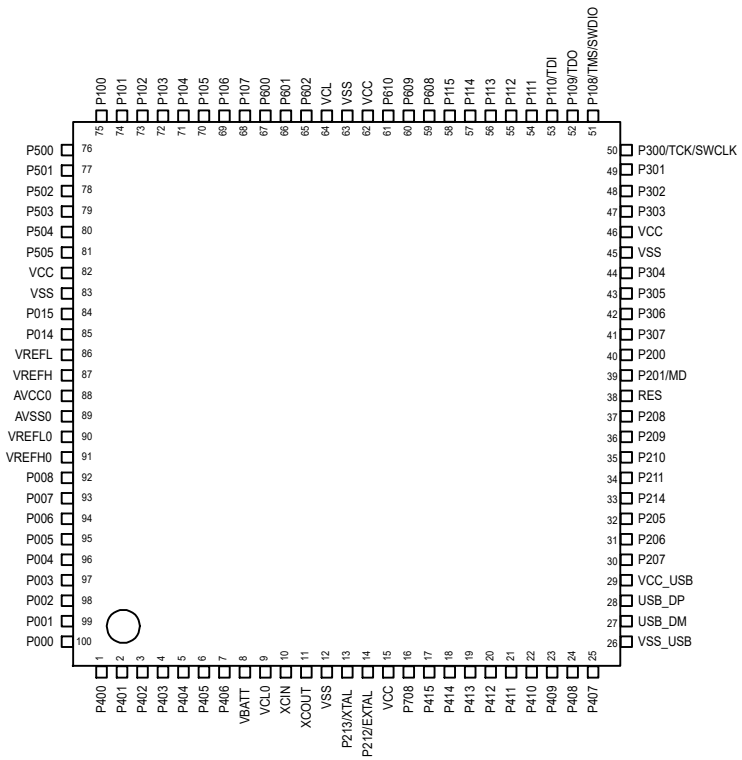

Figure 1.4 Pin assignment for LQFP 100-pin

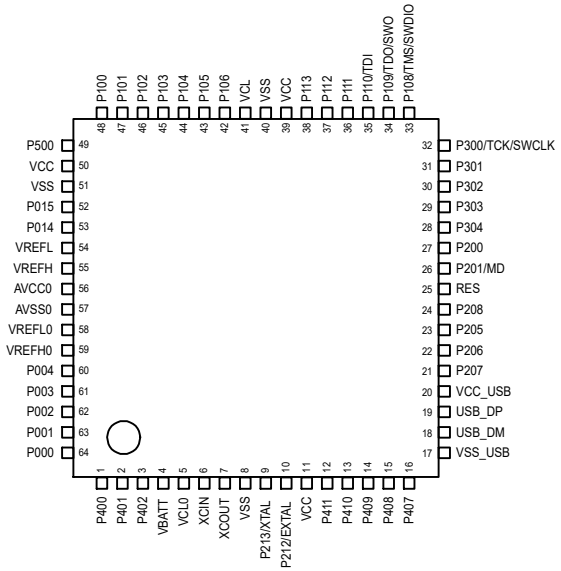

Figure 1.5 Pin assignment for LQFP 64-pin

Downloaded from Arrow.com.

	A	B	C	D	E	F	G	H	
8	P407	P212/ EXTAL	P213/ XTAL	XCOUT	XCIN	VCL0	VBATT	P000	8
7	USB_DM	P408	P409	P411	P405	P401	P002	P001	7
6	USB_DP	P207	P111	P410	P404	P400	P004	P003	6
5	P205	P206	P208	P113	P403	AVSS0	VREFL0	VREFH0	5
4	P200	P201/ MD	RES	P406	P402	AVCC0	VREFL	VREFH	4
3	P304	P303	P302	P106	P105	P104	P102	P014	3
2	P300/ TCK/ SWCLK	P301	P110/ TDI	VCC_USB	VSS_USB	P103	P101	P015	2
1	P108/ TMS/ SWDIO	P109/ TDO/ SWO	P112	VCC	VCL	VSS	P100	P500	1
	A	B	C	D	E	F	G	H	

Figure 1.6 Pin assignment for BGA 64-pin (top view, pad side down)

	A	B	C	D	E	F	G	H	J	K	L	M	N	
13	P408	P410	P412	P212 /EXTAL	P213 /XTAL	XCOUT	XCIN	P705	P700	P405	P403	P400	P401	13
12	USB_DM	P407	P413	P414	P708	P711	P713	P703	P702	P404	P402	P511	P512	12
11	USB_DP	P409	P411	P415	P710	P712	P709	P704	P701	P406	P001	P002	P000	11
10	P206	P207	P205	VCC_USB	VSS_USB	VCC	VSS	VCL0	VBATT	VCC	P005	P004	P003	10
9	P202	P204	P203	VSS						VSS	P007	P009	P006	9
8	P211	P214	P313	VCC						P008	AVSS0	VREFL0	VREFH0	8
7	P208	P210	P209	VSS						VSS	AVCC0	VREFL	VREFH	7
6	P200	P201/MD	RES	VCC						VCC	P503	P014	P015	6
5	P309	P311	P310	VSS						VSS	P505	P507	P506	5
4	P305	P306	P312	VSS	VCC	VCC	VSS	VCL	VCC	VCC	P502	P501	P504	4
3	P304	P307	P308	P110/TDI	P114	P608	P610	P605	P603	P105	P102	P500	P801	3
2	P303	P301	P108/TMS /SWDIO	P109/TDO	P112	P612	P614	P604	P601	P107	P104	P101	P800	2
1	P302	P300/TCK /SWCLK	P111	P113	P115	P609	P611	P613	P602	P600	P106	P103	P100	1
	A	B	C	D	E	F	G	H	J	K	L	M	N	

Figure 1.7 Pin assignment for BGA 144-pin (top view, pad side down)

Downloaded from Arrow.com.

1.7 Pin Lists

Table 1.17 Pin list (1 of 4)

LPQFP144	BGA144	LPQFP100	LPQFP64	BGA64	Power, System, Clock, Debug, CAC	I/O ports	Ex. Bus	Ex. Interrupt	SCI/IIC/SPI/CAN/USBFS/QSPI/OSPI/SSIE/SDHI/MMC/EHTERC(MII,RMII)	GPT/AGT/RTC	ADC12/DAC12	CTSU
1	M13	1	1	F6	—	P400	—	IRQ0	SCK4/SCK7/SCL0_A/AUDIO_CLK/ET0_WOL/ET0_WOL	GTIOC6A/AGTIO1	ADTRG1	—
2	N13	2	2	F7	—	P401	—	IRQ5-DS	CTS4_RTS4/TXD7/SDA0_A/CTX0/ET0_MDC/ET0_MDC	GTETRGA/GTIOC6B	—	—
3	L12	3	3	E4	CACREF	P402	—	IRQ4-DS	CTS4/RXD7/CRX0/AUDIO_CLK/ET0_MDIO/ET0_MDIO	AGTIO0/AGTIO1/AGTIO2/AGTIO3/RTCIC0	—	—
4	L13	4	—	E5	—	P403	—	IRQ14-DS	CTS7_RTS7/SSIBCK0_A/ET0_LINKSTA/ET0_LINKSTA	GTIOC3A/AGTIO0/AGTIO1/AGTIO2/AGTIO3/RTCIC1	—	—
5	K12	5	—	E6	—	P404	—	IRQ15-DS	CTS7/SSILRCK0_A/ET0_EXOUT/ET0_EXOUT	GTIOC3B/AGTIO0_G/AGTIO1/AGTIO2/AGTIO3/RTCIC2	—	—
6	K13	6	—	E7	—	P405	—	—	SSITXD0_A/ET0_TX_EN/RMII0_TXD_EN_B	GTIOC1A	—	—
7	K11	7	—	D4	—	P406	—	—	SSLA3_C/SSIRXD0_A/ET0_RX_ER/RMII0_TXD1_B	GTIOC1B/AGTO5	—	—
8	J13	—	—	—	—	P700	—	—	MISOA_C/ET0_ETXD1/RMII0_TXD0_B	GTIOC5A/AGTO4	—	—
9	J11	—	—	—	—	P701	—	—	MOSIA_C/ET0_ETXD0/REF50CK0_B	GTIOC5B/AGTO3	—	—
10	J12	—	—	—	—	P702	—	—	RSPCKA_C/ET0_ERXD1/RMII0_RXD0_B	GTIOC6A/AGTO2	—	—
11	H12	—	—	—	—	P703	—	—	SSLA0_C/ET0_ERXD0/RMII0_RXD1_B	GTIOC6B/AGTO1	—	—
12	H11	—	—	—	—	P704	—	—	SSLA1_C/CTX0/ET0_RX_CLK/RMII0_RX_ER_B	AGTO0	—	—
13	H13	—	—	—	—	P705	—	—	CTS3/SSLA2_C/CRX0/ET0_CRS/RMII0_CRS_DV_B	AGTIO0	—	—
14	J10	8	4	G8	VBATT	—	—	—	—	—	—	—
15	H10	9	5	F8	VCL0	—	—	—	—	—	—	—
16	G13	10	6	E8	XCIN	—	—	—	—	—	—	—
17	F13	11	7	D8	XCOUT	—	—	—	—	—	—	—
18	G10	12	8	F1	VSS	—	—	—	—	—	—	—
19	E13	13	9	C8	XTAL	P213	—	IRQ2	TXD1	GTETRGC/GTIOC0A/AGTEE2	ADTRG1	—
20	D13	14	10	B8	EXTAL	P212	—	IRQ3	RXD1	GTETRGD/GTIOC0B/AGTEE1	—	—
21	F10	15	11	D1	VCC	—	—	—	—	—	—	—
22	G12	—	—	—	—	P713	—	—	—	GTIOC2A/AGTOA0	—	TS17
23	F11	—	—	—	—	P712	—	—	—	GTIOC2B/AGTOB0	—	TS16
24	F12	—	—	—	—	P711	—	—	CTS1_RTS1/ET0_TX_CLK	AGTEE0	—	TS15
25	E11	—	—	—	—	P710	—	—	SCK1/ET0_TX_ER	—	—	TS14
26	G11	—	—	—	—	P709	—	IRQ10	TXD1/ET0_ETXD2	—	—	TS13
27	E12	16	—	—	CACREF	P708	—	IRQ11	RXD1/SSLB3_B/AUDIO_CLK/ET0_ETXD3	—	—	TS12
28	D11	17	—	—	—	P415	—	IRQ8	SSLB2_B/USB_VBUSEN/SD0CD/ET0_TX_EN/RMII0_TXD_EN_A	GTIOC0A/AGTIO4	—	TS11
29	D12	18	—	—	—	P414	—	IRQ9	CTS0/SSLB1_B/SD0WP/ET0_RX_ER/RMII0_TXD1_A	GTIOC0B/AGTIO5	—	TS10
30	C12	19	—	—	—	P413	—	—	CTS0_RTS0/SSLB0_B/SD0CLK_A/ET0_ETXD1/RMII0_TXD0_A	GTOUUP/AGTEE3	—	TS09
31	C13	20	—	—	—	P412	—	—	SCK0/CTS3/RSPCKB_B/SD0CMD_A/ET0_ETXD0/REF50CK0_A	GTOULO/AGTEE1	—	TS08
32	C11	21	12	D7	—	P411	—	IRQ4	TXD0/CTS3_RTS3/MOSIB_B/SD0DAT0_A/ET0_ERXD1/RMII0_RXD0_A	GTOVUP/GTIOC9A/AGTOA1	—	TS07
33	B13	22	13	D6	—	P410	—	IRQ5	RXD0/SCK3/MISOB_B/SD0DAT1_A/ET0_ERXD0/RMII0_RXD1_A	GTOVLO/GTIOC9B/AGTOB1	—	TS06
34	B11	23	14	C7	—	P409	—	IRQ6	TXD3/USB_EXICEN/ET0_RX_CLK/RMII0_RX_ER_A	GTOWUP/AGTOA2	—	TS05
35	A13	24	15	B7	—	P408	—	IRQ7	CTS4/RXD3/SCL0_B/USB_ID/ET0_CRS/RMII0_CRS_DV_A	GTOWLO/GTIOC6B/AGTOB2	—	TS04
36	B12	25	16	A8	—	P407	—	—	CTS4_RTS4/SDA0_B/SSLA3_A/USB_VBUS/ET0_EXOUT/ET0_EXOUT	GTIOC6A/AGTIO0/RTCOUT	ADTRG0	TS03
37	E10	26	17	E2	VSS_USB	—	—	—	—	—	—	—

Downloaded from Arrow.com.

Table 1.17 Pin list (2 of 4)

LPQFP144	BGA144	LPQFP100	LPQFP64	BGA64	Power, System, Clock, Debug, CAC	I/O ports	Ex. Bus	Ex. Interrupt	SCI/IIC/SPI/CAN/USBFS/QSPI/OSPI/SSIE/SDHI/MMC/EHTERC(MII,RMII)	GPT/AGT/RTC	ADC12/DAC12	CTSU
38	A12	27	18	A7	USB_DM	—	—	—	—	—	—	—
39	A11	28	19	A6	USB_DP	—	—	—	—	—	—	—
40	D10	29	20	D2	VCC_USB	—	—	—	—	—	—	—
41	B10	30	21	B6	—	P207	A17	—	TXD4/SSLA2_A/QSSL	—	—	TSCAP
42	A10	31	22	B5	—	P206	WAIT	IRQ0-DS	RXD4/CTS9/SDA1_B/SSLA1_A/USB_VBUSEN/SSIDATA0_C/SD0DAT2_A/ET0_LINKSTA/ET0_LINKSTA	GTIU	—	TS02
43	C10	32	23	A5	CLKOUT	P205	A16	IRQ1-DS	TXD4/CTS9_RTS9/SCL1_B/SSLA0_A/USB_OVRCURA-DS/SSILRCK0_C/SD0DAT3_A/ET0_WOL/ET0_WOL	GTIV/GTIOC4A/AGTO1	—	TS01
44	B9	—	—	—	CACREF	P204	A18	—	SCK4/SCK9/RSPCKA_A/USB_OVRCURB-DS/SSIBCK0_C/SD0DAT4_A/ET0_RX_DV	GTIW/GTIOC4B/AGTIO1	—	TS00
45	C9	—	—	—	—	P203	A19	IRQ2-DS	CTS2_RTS2/TXD9/MOSIA_A/CTX0/SD0DAT5_A/ET0_COL	GTIOC5A/AGTOA3	—	TS18
46	A9	—	—	—	—	P202	WR1/BC1	IRQ3-DS	SCK2/RXD9/MISOA_A/CRX0/SD0DAT6_A/ET0_ERXD2	GTIOC5B/AGTOB3	—	TS19
47	C8	—	—	—	—	P313	A20	—	SD0DAT7_A/ET0_ERXD3	—	—	—
48	D9	—	—	—	VSS	—	—	—	—	—	—	—
49	D8	—	—	—	VCC	—	—	—	—	—	—	—
50	B8	33	—	—	TCLK	P214	—	—	QSPCLK/SD0CLK_B/ET0_MDC/ET0_MDC	GTIU/AGTO5	—	—
51	A8	34	—	—	TDATA0	P211	CS7	—	QIO0/SD0CMD_B/ET0_MDIO/ET0_MDIO	GTIV/AGTOA5	—	—
52	B7	35	—	—	TDATA1	P210	CS6	—	QIO1/SD0CD/ET0_WOL/ET0_WOL	GTIW/AGTOB5	—	—
53	C7	36	—	—	TDATA2	P209	CS5	—	QIO2/SD0WP/ET0_EXOUT/ET0_EXOUT	GTOVUP/AGTEE5	—	—
54	A7	37	24	C5	TDATA3	P208	CS4	—	QIO3/SD0DAT0_B/ET0_LINKSTA/ET0_LINKSTA	GTOVLO	—	—
55	C6	38	25	C4	RES	—	—	—	—	—	—	—
56	B6	39	26	B4	MD	P201	—	—	—	—	—	—
57	A6	40	27	A4	—	P200	—	NMI	—	—	—	—
58	C4	—	—	—	—	P312	CS3	—	CTS3_RTS3	AGTOA1	—	—
59	B5	—	—	—	—	P311	CS2	—	SCK3	AGTOB1	—	—
60	C5	—	—	—	—	P310	A15	—	TXD3/QIO3	AGTEE1	—	—
61	A5	—	—	—	—	P309	A14	—	RXD3/QIO2	AGTOA4	—	—
62	C3	—	—	—	—	P308	A13	—	CTS6/CTS3/QIO1	AGTOB4	—	—
63	B3	41	—	—	—	P307	A12	—	CTS6_RTS6/QIO0	GTOUUP_D/AGTEE4	—	—
64	B4	42	—	—	—	P306	A11	—	SCK6/QSSL	GTOULO_D/AGTOA2	—	—
65	A4	43	—	—	—	P305	A10	IRQ8	TXD6/QSPCLK	GTOWUP/AGTOB2	—	—
66	A3	44	28	A3	—	P304	A9	IRQ9	RXD6	GTOWLO/GTIOC7A/AGTEE2	—	—
67	D7	45	—	—	VSS	—	—	—	—	—	—	—
68	D6	46	—	—	VCC	—	—	—	—	—	—	—
69	A2	47	29	B3	—	P303	A8	—	CTS9	GTIOC7B	—	—
70	A1	48	30	C3	—	P302	A7	IRQ5	TXD2/SSLA3_B	GTOUUP/GTIOC4A	—	—
71	B2	49	31	B2	—	P301	A6	IRQ6	RXD2/CTS9_RTS9/SSLA2_B	GTOULO/GTIOC4B/AGTIO0	—	—
72	B1	50	32	A2	TCK/SWCLK	P300	—	—	SSLA1_B	GTOUUP/GTIOC0A	—	—
73	C2	51	33	A1	TMS/SWDIO	P108	—	—	CTS9_RTS9/SSLA0_B	GTOULO/GTIOC0B/AGTOA3	—	—
74	D2	52	34	B1	TDO/SWO/CLKOUT	P109	—	—	TXD9/MOSIA_B/CTX1	GTOVUP/GTIOC1A/AGTOB3	—	—
75	D3	53	35	C2	TDI	P110	—	IRQ3	CTS2_RTS2/RXD9/MISOA_B/CRX1	GTOVLO/GTIOC1B/AGTEE3	—	—
76	C1	54	36	C6	—	P111	A5	IRQ4	SCK2/SCK9/RSPCKA_B	GTIOC3A/AGTOA5	—	—
77	E2	55	37	C1	—	P112	A4	—	TXD2/SCK1/SSLA0_B/QSSL/OM_CS1/SSIBCK0_B	GTIOC3B/AGTOB5	—	—
78	D1	56	38	D5	—	P113	A3	—	RXD2/SSILRCK0_B	GTIOC2A/AGTEE5	—	—
79	E3	57	—	—	—	P114	A2	—	CTS9/SSIRXD0_B	GTIOC2B/AGTIO5	—	—

Downloaded from Arrow.com.

Table 1.17 Pin list (3 of 4)

LPQFP144	BGA144	LPQFP100	LPQFP64	BGA64	Power, System, Clock, Debug, CAC	I/O ports	Ex. Bus	Ex. Interrupt	SCI/IIC/SPI/CAN/USBFS/QSPI/OSPI/ SSIE/SDHI/MMC/EHTERC(MII,RMII)	GPT/AGT/RTC	ADC12/DAC12	CTSU
80	E1	58	—	—	—	P115	A1	—	SSITXD0_B	GTIOC4A	—	—
81	E4	—	—	—	VCC	—	—	—	—	—	—	—
82	D5	—	—	—	VSS	—	—	—	—	—	—	—
83	F3	59	—	—	—	P608	A0/BC0	—	—	GTIOC4B	—	—
84	F1	60	—	—	—	P609	CS1	—	CTX1/OM_ECS	GTIOC5A/AGTO5	—	—
85	G3	61	—	—	—	P610	CS0	—	CTS7/CRX1/OM_CS0	GTIOC5B/AGTO4	—	—
86	G1	—	—	—	CACREF/CLKOUT	P611	—	—	CTS7_RTS7	AGTO3	—	—
87	F2	—	—	—	—	P612	D8	—	SCK7	AGTO2	—	—
88	H1	—	—	—	—	P613	D9	—	TXD7	AGTO1	—	—
89	G2	—	—	—	—	P614	D10	—	RXD7	AGTO0	—	—
90	F4	62	39	D1	VCC	—	—	—	—	—	—	—
91	D4	63	40	F1	VSS	—	—	—	—	—	—	—
92	H4	64	41	E1	VCL	—	—	—	—	—	—	—
93	H3	—	—	—	—	P605	D11	—	CTS8	GTIOC8A/AGTO4	—	—
94	H2	—	—	—	—	P604	D12	—	CTS9	GTIOC8B/AGTEE4	—	—
95	J3	—	—	—	—	P603	D13	—	CTS9_RTS9	GTIOC7A/AGTIO4	—	—
96	J1	65	—	—	—	P602	BCLK	—	TXD9/OM_CS1	GTIOC7B/AGTO3	—	—
97	J2	66	—	—	—	P601	WR/WR0	—	RXD9/OM_SIO2	GTIOC6A/AGTEE3	—	—
98	K1	67	—	—	CACREF/CLKOUT	P600	RD	—	SCK9/OM_SIO4	GTIOC6B/AGTIO3	—	—
99	J4	—	—	—	VCC	—	—	—	—	—	—	—
100	G4	—	—	—	VSS	—	—	—	—	—	—	—
101	K2	68	—	—	—	P107	D7	—	CTS8_RTS8/OM_SIO3	GTIOC8A/AGTOA0	—	—
102	L1	69	42	D3	—	P106	D6	—	SCK8/SSLB3_A/OM_SIO0	GTIOC8B/AGTOB0	—	—
103	K3	70	43	E3	—	P105	D5	IRQ0	TXD8/SSLB2_A/OM_SIO5	GTETRGA/GTIOC1A/ AGTO2	—	—
104	L2	71	44	F3	—	P104	D4	IRQ1	RXD8/SSLB1_A/QIO2/OM_DQS	GTETRGB/GTIOC1B/ AGTEE2	—	—
105	M1	72	45	F2	—	P103	D3	—	CTS0_RTS0/SSLB0_A/CTX0/QIO3/ OM_SIO6	GTOWUP/GTIOC2A/ AGTIO2	—	—
106	L3	73	46	G3	—	P102	D2	—	SCK0/RSPCKB_A/CRX0/QIO0/OM_SIO1	GTOWLO/GTIOC2B/ AGTO0	ADTRG0	—
107	M2	74	47	G2	—	P101	D1	IRQ1	TXD0/CTS1_RTS1/MOSIB_A/QIO1/ OM_SIO7	GTETRGB/GTIOC5A/ AGTEE0	—	—
108	N1	75	48	G1	—	P100	D0	IRQ2	RXD0/SCK1/MISOB_A/QSPCLK/OM_SCLK	GTETRGA/GTIOC5B/ AGTIO0	—	—
109	N2	—	—	—	—	P800	D14	—	CTS0	AGTOA4	—	—
110	N3	—	—	—	—	P801	D15	—	CTS8	AGTOB4	—	—
111	K4	—	—	—	VCC	—	—	—	—	—	—	—
112	K5	—	—	—	VSS	—	—	—	—	—	—	—
113	M3	76	49	H1	CACREF	P500	—	—	CTS5/USB_VBUSEN/QSPCLK	GTIU/AGTOA0	AN116	—
114	M4	77	—	—	—	P501	—	IRQ11	TXD5/USB_OVRCURA/QSSL	GTIV/AGTOB0	AN117	—
115	L4	78	—	—	—	P502	—	IRQ12	CTS6/RXD5/USB_OVRCURB/QIO0	GTIW/AGTOA2	AN118	—
116	L6	79	—	—	—	P503	—	—	CTS6_RTS6/SCK5/USB_EXICEN/QIO1	GTETRGC/AGTOB2	AN119	—
117	N4	80	—	—	—	P504	ALE	—	SCK6/CTS5_RTS5/USB_ID/QIO2	GTETRGD/AGTOA3	AN120	—
118	L5	81	—	—	—	P505	—	IRQ14	RXD6/QIO3	AGTOB3	AN121	—
119	N5	—	—	—	—	P506	—	IRQ15	TXD6	—	AN122	—
120	M5	—	—	—	—	P507	—	—	SCK6/SCK5	—	—	—
121	K6	82	50	D1	VCC	—	—	—	—	—	—	—
122	K7	83	51	F1	VSS	—	—	—	—	—	—	—
123	N6	84	52	H2	—	P015	—	IRQ13	—	—	AN013/DA1	—
124	M6	85	53	H3	—	P014	—	—	—	—	AN012/DA0	—
125	M7	86	54	G4	VREFL	—	—	—	—	—	—	—

Downloaded from Arrow.com.

Table 1.17 Pin list (4 of 4)

LPQFP144	BGA144	LPQFP100	LPQFP64	BGA64	Power, System, Clock, Debug, CAC	I/O ports	Ex. Bus	Ex. Interrupt	SCI/IIC/SPI/CAN/USBFS/QSPI/OSPI/SSIE/SDHI/MMC/EHTERC(MII,RMII)	GPT/AGT/RTC	ADC12/DAC12	CTSU
126	N7	87	55	H4	VREFH	—	—	—	—	—	—	—
127	L7	88	56	F4	AVCC0	—	—	—	—	—	—	—
128	L8	89	57	F5	AVSS0	—	—	—	—	—	—	—
129	M8	90	58	G5	VREFL0	—	—	—	—	—	—	—
130	N8	91	59	H5	VREFH0	—	—	—	—	—	—	—
131	M9	—	—	—	—	P009	—	IRQ13-DS	—	—	AN009	—
132	K8	92	—	—	—	P008	—	IRQ12-DS	—	—	AN008	—
133	L9	93	—	—	—	P007	—	—	—	—	AN007	—
134	N9	94	—	—	—	P006	—	IRQ11-DS	—	—	AN006	—
135	L10	95	—	—	—	P005	—	IRQ10-DS	—	—	AN005	—
136	M10	96	60	G6	—	P004	—	IRQ9-DS	—	—	AN004	—
137	N10	97	61	H6	—	P003	—	—	—	—	AN003	—
138	M11	98	62	G7	—	P002	—	IRQ8-DS	—	—	AN002/AN102	—
139	L11	99	63	H7	—	P001	—	IRQ7-DS	—	—	AN001/AN101	—
140	N11	100	64	H8	—	P000	—	IRQ6-DS	—	—	AN000/AN100	—
141	K9	—	—	—	VSS	—	—	—	—	—	—	—
142	K10	—	—	—	VCC	—	—	—	—	—	—	—
143	N12	—	—	—	—	P512	—	IRQ14	TXD4/SCL1_A/CTX1	GTIOC0A	—	—
144	M12	—	—	—	—	P511	—	IRQ15	RXD4/SDA1_A/CRX1	GTIOC0B	—	—

Note: Several pin names have the added suffix of _A, _B, and _C. The suffix can be ignored when assigning functionality.

Downloaded from Arrow.com.

2. Electrical Characteristics

Supported peripheral functions and pins differ from one product name to another.

Unless otherwise specified, the electrical characteristics of the MCU are defined under the following conditions:

- VCC = AVCC0 = VCC_USB = VBATT = 2.7 to 3.6 V
- 2.7 ≤ VREFH0/VREFH ≤ AVCC0
- VSS = AVSS0 = VREFL0/VREFL = VSS_USB = 0 V
- $T_a = T_{opr}$

Figure 2.1 shows the timing conditions.

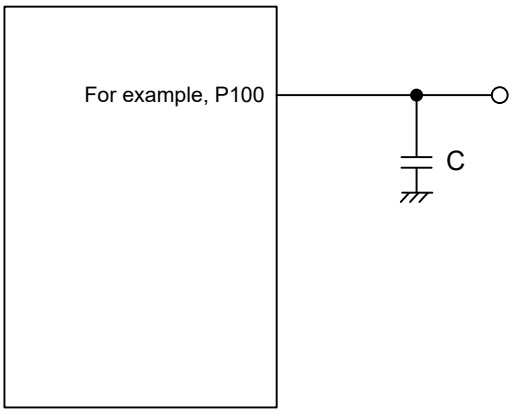

V_{OH} = VCC × 0.7, V_{OL} = VCC × 0.3
V_{IH} = VCC × 0.7, V_{IL} = VCC × 0.3
Load capacitance C = 30 pF

Figure 2.1 Input or output timing measurement conditions

The recommended measurement conditions for the timing specification of each peripheral provided are for the best peripheral operation. Make sure to adjust the driving abilities of each pin to meet your conditions.

2.1 Absolute Maximum Ratings

Table 2.1 Absolute maximum ratings

Parameter	Symbol	Value	Unit
Power supply voltage	VCC, VCC_USB*2	–0.3 to +4.0	V
VBATT power supply voltage	VBATT	–0.3 to +4.0	V
Input voltage (except for 5 V-tolerant ports*1)	V_{in}	–0.3 to VCC + 0.3	V
Input voltage (5 V-tolerant ports*1)	V_{in}	–0.3 to + VCC + 4.0 (max. 5.8)	V
Reference power supply voltage	VREFH/VREFH0	–0.3 to VCC + 0.3	V
Analog power supply voltage	AVCC0*2	–0.3 to +4.0	V
Analog input voltage	V_{AN}	–0.3 to AVCC0 + 0.3	V
Operating temperature*3 *4	T_{opr}	–40 to +105	°C
Storage temperature	T_{stg}	–55 to +125	°C

Note 1. Ports P205, P206, P400, P401, P407 to P415, P511, P512, and P708 to P713 are 5 V tolerant.
Note 2. Connect AVCC0 and VCC_USB to VCC.
Note 3. See section 2.2.1. Tj/Ta Definition.
Note 4. Contact a Renesas Electronics sales office for information on derating operation when Ta = +85°C to +105°C. Derating is the systematic reduction of load for improved reliability.

Downloaded from Arrow.com.

Caution: Permanent damage to the MCU might result if absolute maximum ratings are exceeded.

Table 2.2 Recommended operating conditions

Parameter	Symbol	Value	Min	Typ	Max	Unit
Power supply voltages	VCC	When USB is not used	2.7	—	3.6	V
		When USB is used	3.0	—	3.6	V
	VSS		—	0	—	V
USB power supply voltages	VCC_USB		—	VCC	—	V
	VSS_USB		—	0	—	V
VBATT power supply voltage	VBATT		1.65*2	—	3.6	V
Analog power supply voltages	AVCC0*1		—	VCC	—	V
	AVSS0		—	0	—	V

Note 1. Connect AVCC0 to VCC. When the A/D converter and the D/A converter are not in use, do not leave the AVCC0, VREFH/VREFH0, AVSS0, and VREFL/VREFL0 pins open. Connect the AVCC0 and VREFH/VREFH0 pins to VCC, and the AVSS0 and VREFL/VREFL0 pins to VSS, respectively.

Note 2. Low CL crystal cannot be used below VBATT = 1.8 V.

2.2 DC Characteristics

2.2.1 Tj/Ta Definition

Table 2.3 DC characteristics

Parameter	Symbol	Typ	Max	Unit	Test conditions
Permissible junction temperature	T_j	—	125	°C	High-speed mode Low-speed mode Subosc-speed mode
			105*1		

Note: Make sure that $T_j = T_a + \theta ja \times$ total power consumption (W), where total power consumption = $(VCC - V_{OH}) \times \Sigma I_{OH} + V_{OL} \times \Sigma I_{OL} + I_{CC}max \times VCC$.

Note 1. The upper limit of operating temperature is 85°C or 105°C, depending on the product. For details, see section x.x. Part Numbering. If the part number shows the operation temperature to 85°C, then T_j max is 105°C, otherwise, 125°C.

2.2.2 I/O V_{IH}, V_{IL}

Table 2.4 I/O V_{IH}, V_{IL} (1 of 2)

Parameter			Symbol	Min	Typ	Max	Unit
Input voltage (except for Schmitt trigger input pins)	Peripheral function pin	EXTAL (external clock input), WAIT, SPI (except RSPCK), OSPI (except ECS)	V_{IH}	VCC × 0.8	—	—	V
			V_{IL}	—	—	VCC × 0.2	
		D00 to D15	V_{IH}	VCC × 0.7	—	—	
			V_{IL}	—	—	VCC × 0.3	
		ETHERC	V_{IH}	2.3	—	—	
			V_{IL}	—	—	VCC × 0.2	
		IIC (SMBus)	V_{IH}	2.1	—	VCC + 3.6 (max 5.8)	
			V_{IL}	—	—	0.8	

Downloaded from Arrow.com.

Table 2.4 I/O V_{IH}, V_{IL} (2 of 2)

Parameter					Symbol	Min	Typ	Max	Unit
Schmitt trigger input voltage	Peripheral function pin	IIC (except for SMBus)			V_{IH}	VCC × 0.7	—	VCC + 3.6 (max 5.8)	V
					V_{IL}	—	—	VCC × 0.3	
					ΔV_T	VCC × 0.05	—	—	
		5 V-tolerant ports*1 *5			V_{IH}	VCC × 0.8	—	VCC + 3.6 (max 5.8)	
					V_{IL}	—	—	VCC × 0.2	
					ΔV_T	VCC × 0.05	—	—	
		RTCIC0, RTCIC1, RTCIC2	When using the Battery Backup Function	When VBATT power supply is selected	V_{IH}	V_{BATT} × 0.8	—	V_{BATT} + 0.3	
					V_{IL}	—	—	V_{BATT} × 0.2	
					ΔV_T	V_{BATT} × 0.05	—	—	
				When VCC power supply is selected	V_{IH}	VCC × 0.8	—	Higher voltage either VCC + 0.3 V or V_{BATT} + 0.3 V	
					V_{IL}	—	—	VCC × 0.2	
					ΔV_T	VCC × 0.05	—	—	
			When not using the Battery Backup Function		V_{IH}	VCC × 0.8	—	VCC + 0.3	
					V_{IL}	—	—	VCC × 0.2	
					ΔV_T	VCC × 0.05	—	—	
		Other input pins*2			V_{IH}	VCC × 0.8	—	—	
					V_{IL}	—	—	VCC × 0.2	
					ΔV_T	VCC × 0.05	—	—	
	Ports	5 V-tolerant ports*3 *5			V_{IH}	VCC × 0.8	—	VCC + 3.6 (max 5.8)	V
					V_{IL}	—	—	VCC × 0.2	
		Other input pins*4			V_{IH}	VCC × 0.8	—	—	
					V_{IL}	—	—	VCC × 0.2	

Note 1. RES and peripheral function pins associated with P205, P206, P400, P401, P407 to P415, P511, P512, P708 to P713 (total 22 pins).
Note 2. All input pins except for the peripheral function pins already described in the table.
Note 3. P205, P206, P400, P401, P407 to P415, P511, P512, P708 to P713 (total 21 pins).
Note 4. All input pins except for the ports already described in the table.
Note 5. When VCC is less than 2.7 V, the input voltage of 5 V-tolerant ports should be less than 3.6 V, otherwise breakdown may occur because 5 V-tolerant ports are electrically controlled so as not to violate the break down voltage.

Downloaded from Arrow.com.

2.2.3 I/O I_{OH}, I_{OL}

Table 2.5 I/O I_{OH}, I_{OL} (1 of 2)

Parameter			Symbol	Min	Typ	Max	Unit
Permissible output current (average value per pin)	Ports P000 to P009, P014, P015, P201	—	I_{OH}	—	—	–2.0	mA
			I_{OL}	—	—	2.0	mA
	Ports P205, P206, P407 to P415, P708 to P713 (total 17 pins)	Low drive*1	I_{OH}	—	—	–2.0	mA
			I_{OL}	—	—	2.0	mA
		Middle drive*2	I_{OH}	—	—	–4.0	mA
			I_{OL}	—	—	4.0	mA
		High drive*3	I_{OH}	—	—	–20	mA
			I_{OL}	—	—	20	mA
	Ports P100 to P107, P208 to P211, P214, P600, P601 (total 15 pins)	Low drive*1	I_{OH}	—	—	–2.0	mA
			I_{OL}	—	—	2.0	mA
		Middle drive*2	I_{OH}	—	—	–4.0	mA
			I_{OL}	—	—	4.0	mA
		High drive*3	I_{OH}	—	—	–16	mA
			I_{OL}	—	—	16	mA
		High speed high drive*4	I_{OH}	—	—	–20	mA
			I_{OL}	—	—	20	mA
	Other output pins*5	Low drive*1	I_{OH}	—	—	–2.0	mA
			I_{OL}	—	—	2.0	mA
		Middle drive*2	I_{OH}	—	—	–4.0	mA
			I_{OL}	—	—	4.0	mA
		High drive*3	I_{OH}	—	—	–16	mA
			I_{OL}	—	—	16	mA

Downloaded from Arrow.com.

Table 2.5 I/O I_{OH}, I_{OL} (2 of 2)

Parameter			Symbol	Min	Typ	Max	Unit
Permissible output current (max value per pin)	Ports P000 to P009, P014, P015, P201	—	I_{OH}	—	—	–4.0	mA
			I_{OL}	—	—	4.0	mA
	Ports P205, P206, P407 to P415, P708 to P713 (total 17 pins)	Low drive*1	I_{OH}	—	—	–4.0	mA
			I_{OL}	—	—	4.0	mA
		Middle drive*2	I_{OH}	—	—	–8.0	mA
			I_{OL}	—	—	8.0	mA
		High drive*3	I_{OH}	—	—	–40	mA
			I_{OL}	—	—	40	mA
	Ports P100 to P107, P208 to P211, P214, P600, P601 (total 15 pins)	Low drive*1	I_{OH}	—	—	–4.0	mA
			I_{OL}	—	—	4.0	mA
		Middle drive*2	I_{OH}	—	—	–8.0	mA
			I_{OL}	—	—	8.0	mA
		High drive*3	I_{OH}	—	—	–32	mA
			I_{OL}	—	—	32	mA
		High speed high drive*4	I_{OH}	—	—	–40	mA
			I_{OL}	—	—	40	mA
	Other output pins*5	Low drive*1	I_{OH}	—	—	–4.0	mA
			I_{OL}	—	—	4.0	mA
		Middle drive*2	I_{OH}	—	—	–8.0	mA
			I_{OL}	—	—	8.0	mA
		High drive*3	I_{OH}	—	—	–32	mA
			I_{OL}	—	—	32	mA
Permissible output current (max value of total of all pins)	Maximum of all output pins		$\Sigma I_{OH\ (max)}$	—	—	–80	mA
			$\Sigma I_{OL\ (max)}$	—	—	80	mA

Note 1. This is the value when low driving ability is selected in the Port Drive Capability bit in the PmnPFS register. The selected driving ability is retained in Deep Software Standby mode.
Note 2. This is the value when middle driving ability is selected in the Port Drive Capability bit in the PmnPFS register. The selected driving ability is retained in Deep Software Standby mode.
Note 3. This is the value when high driving ability is selected in the Port Drive Capability bit in the PmnPFS register. The selected driving ability is retained in Deep Software Standby mode.
Note 4. This is the value when high speed high driving ability is selected in the Port Drive Capability in the PmnPFS register. The selected driving ability is retained in Deep Software Standby mode.
Note 5. Except for P200, which is an input port.

Caution: To protect the reliability of the MCU, the output current values should not exceed the values in this table. The average output current indicates the average value of current measured during 100 µs.

Downloaded from Arrow.com.

2.2.4 I/O V_{OH}, V_{OL}, and Other Characteristics

Table 2.6 I/O V_{OH}, V_{OL}, and other characteristics

Parameter		Symbol	Min	Typ	Max	Unit	Test conditions
Output voltage	IIC	V_{OL}	—	—	0.4	V	I_{OL} = 3.0 mA
		V_{OL}	—	—	0.6		I_{OL} = 6.0 mA
	IIC*1	V_{OL}	—	—	0.4		I_{OL} = 15.0 mA (ICFER.FMPE = 1)
		V_{OL}	—	0.4	—		I_{OL} = 20.0 mA (ICFER.FMPE = 1)
	ETHERC	V_{OH}	VCC – 0.5	—	—		I_{OH} = –1.0 mA
		V_{OL}	—	—	0.4		I_{OL} = 1.0 mA
	Ports P205, P206, P407 to P415, P708 to P713 (total of 17 pins)*2	V_{OH}	VCC – 1.0	—	—		I_{OH} = –20 mA VCC = 3.3 V
		V_{OL}	—	—	1.0		I_{OL} = 20 mA VCC = 3.3 V
	Other output pins	V_{OH}	VCC – 0.5	—	—		I_{OH} = –1.0 mA
		V_{OL}	—	—	0.5		I_{OL} = 1.0 mA
Input leakage current	RES	$\|I_{in}\|$	—	—	5.0	μA	V_{in} = 0 V V_{in} = 5.5 V
	Port P200		—	—	1.0		V_{in} = 0 V V_{in} = VCC
Three-state leakage current (off state)	5 V-tolerant ports	$\|I_{TSI}\|$	—	—	5.0	μA	V_{in} = 0 V V_{in} = 5.5 V
	Other ports (except for port P200)		—	—	1.0		V_{in} = 0 V V_{in} = VCC
Input pull-up MOS current	Ports P0 to P8	I_p	–300	—	–10	μA	VCC = 2.7 to 3.6 V V_{in} = 0 V
Input capacitance	Ports P014, P015	C_{in}	—	—	16	pF	Vbias = 0 V Vamp = 20 mV f = 1 MHz Ta = 25°C
	USB_DP and USB_DM		—	—	12		
	Ports P400, P401, P511, P512		—	—	10		
	Other input pins		—	—	8		

Note 1. SCL0_A, SDA0_A (total 2 pins).
Note 2. This is the value when high driving ability is selected in the Port Drive Capability bit in the PmnPFS register. The selected driving ability is retained in Deep Software Standby mode.

Downloaded from Arrow.com.

2.2.5 Operating and Standby Current

Table 2.7 Operating and standby current (1 of 2)

Parameter				Symbol	Min	Typ	Max	Unit	Test conditions
Supply current*1	High-speed mode	Maximum*2		I_{CC}*3	—	—	115	mA	ICLK = 200 MHz PCLKA = 100 MHz PCLKB = 50 MHz PCLKC = 50 MHz PCLKD = 100 MHz FCLK = 50 MHz BCLK = 100 MHz
		CoreMark®*5, *6			—	20	—		
		Normal mode	All peripheral clocks enabled, while (1) code executing from flash*4		—	30	—		
			All peripheral clocks disabled, while (1) code executing from flash*5, *6		—	17	—		
		Sleep mode*5, *6			—	10	47		
		Increase during BGO operation	Data flash P/E		—	6	—		
			Code flash P/E		—	8	—		
	Low-speed mode*5 *9				—	1.9	—		ICLK = 1 MHz
	Subosc-speed mode*5 *10				—	1.7	—		ICLK = 32.768 kHz
	Software Standby mode		SNZCR.RXDREQEN = 1		—	—	34		—
			SNZCR.RXDREQEN = 0		—	1.6	—		—
	Deep Software Standby mode	Power supplied to Standby SRAM and USB resume detecting unit			—	16.9	131	μA	—
		Power not supplied to SRAM or USB resume detecting unit	Power-on reset circuit low power function disabled		—	11.8	31		—
			Power-on reset circuit low power function enabled		—	4.8	21		—
		Increase when the RTC and AGT are operating	When the low-speed on-chip oscillator (LOCO) is in use		—	4.0	—		—
			When a crystal oscillator for low clock loads is in use		—	1.2	—		—
			When a crystal oscillator for standard clock loads is in use		—	1.5	—		—
	RTC operating while VCC is off (with the battery backup function, only the RTC and sub-clock oscillator operate)		When a crystal oscillator for low clock loads is in use		—	0.9	—		V_{BATT} = 1.8 V, VCC = 0 V
					—	1.3	—		V_{BATT} = 3.3 V, VCC = 0 V
			When a crystal oscillator for standard clock loads is in use		—	1.0	—		V_{BATT} = 1.8 V, VCC = 0 V
					—	1.7	—		V_{BATT} = 3.3 V, VCC = 0 V
	Inrush current on returning from Deep Software Standby mode		Inrush current*7	I_{RUSH}	—	160	—	mA	
			Energy of inrush current*7	E_{RUSH}	—	1.0	—	μC	
Analog power supply current	During 12-bit A/D conversion			AI_{CC}	—	0.8	1.1	mA	—
	Temperature sensor				—	0.1	0.2	mA	—
	During D/A conversion (per unit)		Without AMP output		—	0.1	0.2	mA	—
			With AMP output		—	0.6	1.1	mA	—

Downloaded from Arrow.com.

Table 2.7 Operating and standby current (2 of 2)

Parameter			Symbol	Min	Typ	Max	Unit	Test conditions
	Waiting for A/D, D/A conversion (all units)			—	0.9	1.6	mA	—
	ADC12, DAC12 in standby modes (all units)*8			—	2	8	μA	—
Reference power supply current (VREFH0)	During 12-bit A/D conversion (unit 0)		AI_{REFH0}	—	70	120	μA	—
	Waiting for 12-bit A/D conversion (unit 0)			—	0.07	0.5	μA	—
	ADC12 in standby modes (unit 0)			—	0.07	0.5	μA	—
Reference power supply current (VREFH)	During 12-bit A/D conversion (unit 1)		AI_{REFH}	—	70	120	μA	—
	During D/A conversion (per unit)	Without AMP output		—	0.1	0.4	mA	—
		With AMP output		—	0.1	0.4	mA	—
	ADC12 unit 1 in standby modes			—	0.07	0.8	μA	—
	Waiting for 12-bit A/D (unit 1), D/A (all units) conversion			—	0.07	0.8	μA	—
USB operating current	Low speed	USB	$I_{CCUSBLS}$	—	3.5	6.5	mA	VCC_USB
	Full speed	USB	$I_{CCUSBFS}$	—	4.0	10.0	mA	VCC_USB

Note 1. Supply current values are with all output pins unloaded and all input pull-up MOSs in the off state.
Note 2. Measured with clocks supplied to the peripheral functions. This does not include the BGO operation.
Note 3. I_{CC} depends on f (ICLK) as follows.
I_{CC} Max. = 0.37 × f + 42 (max. operation in high-speed mode)
I_{CC} Typ. = 0.07 × f + 3.6 (normal operation in high-speed mode, all peripheral clocks disabled)
I_{CC} Typ. = 0.2 × f + 1.7 (low-speed mode)
I_{CC} Max. = 0.03 × f + 42 (sleep mode)
Note 4. This does not include the BGO operation.
Note 5. Supply of the clock signal to peripherals is stopped in this state. This does not include the BGO operation.
Note 6. FCLK, BCLK, PCLKA, PCLKB, PCLKC, and PCLKD are set to be divided by 64 (3.125 MHz).
Note 7. Reference value
Note 8. When the MCU is in Software Standby mode or the MSTPCRD.MSTPD16 (12-Bit A/D Converter 0 Module Stop bit) and MSTPCRD.MSTPD15 (12-bit A/D Converter 1 Module Stop bit) are in the module-stop state.
Note 9. FCLK, BCLK, PCLKA, PCLKB, PCLKC, and PCLKD are set to divided by 64 (15.6 kHz).
Note 10. BCLK, PCLKA, PCLKB, PCLKC, and PCLKD are set to be divided by 64 (512 Hz). FCLK is the same frequency as that of ICLK.

Table 2.8 Coremark and normal mode current

Parameter			Symbol	Typ	Unit	Test conditions
Supply Current*1	Coremark		I_{CC}	99	μA/MHz	ICLK = 200MHz PCLKA = PCLKB = PCLKC = PCLKD = FCLK = BCLK = 3.125MHz
	Normal mode	All peripheral clocks disabled, cache on, while (1) code executing from flash*2		95		
		All peripheral clocks disabled, cache off, while (1) code executing from flash*2		82		

Note 1. Supply current values are with all output pins unloaded and all input pull-up MOSs in the off state.
Note 2. Supply of the clock signal to peripherals is stopped in this state. This does not include the BGO operation.

Downloaded from Arrow.com.

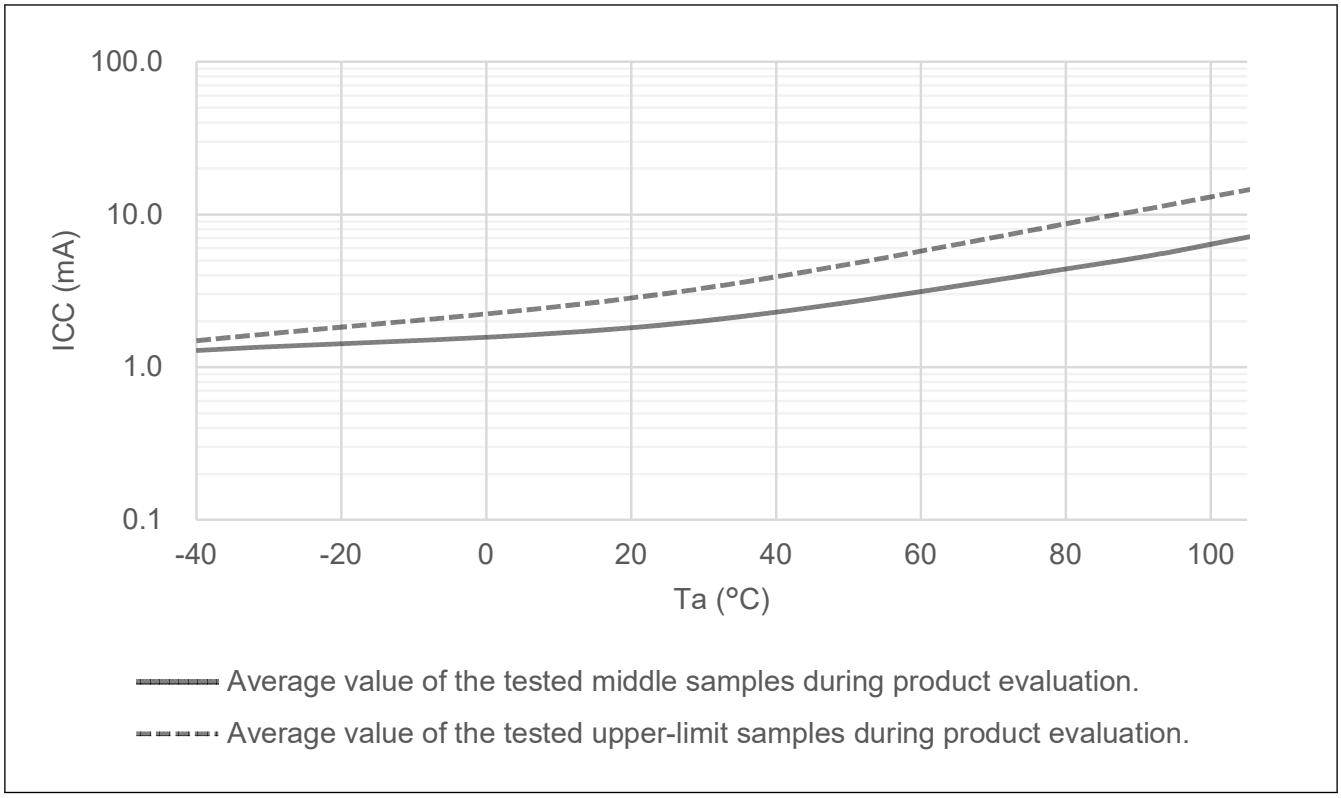

Figure 2.2 Temperature dependency in Software Standby mode (reference data)

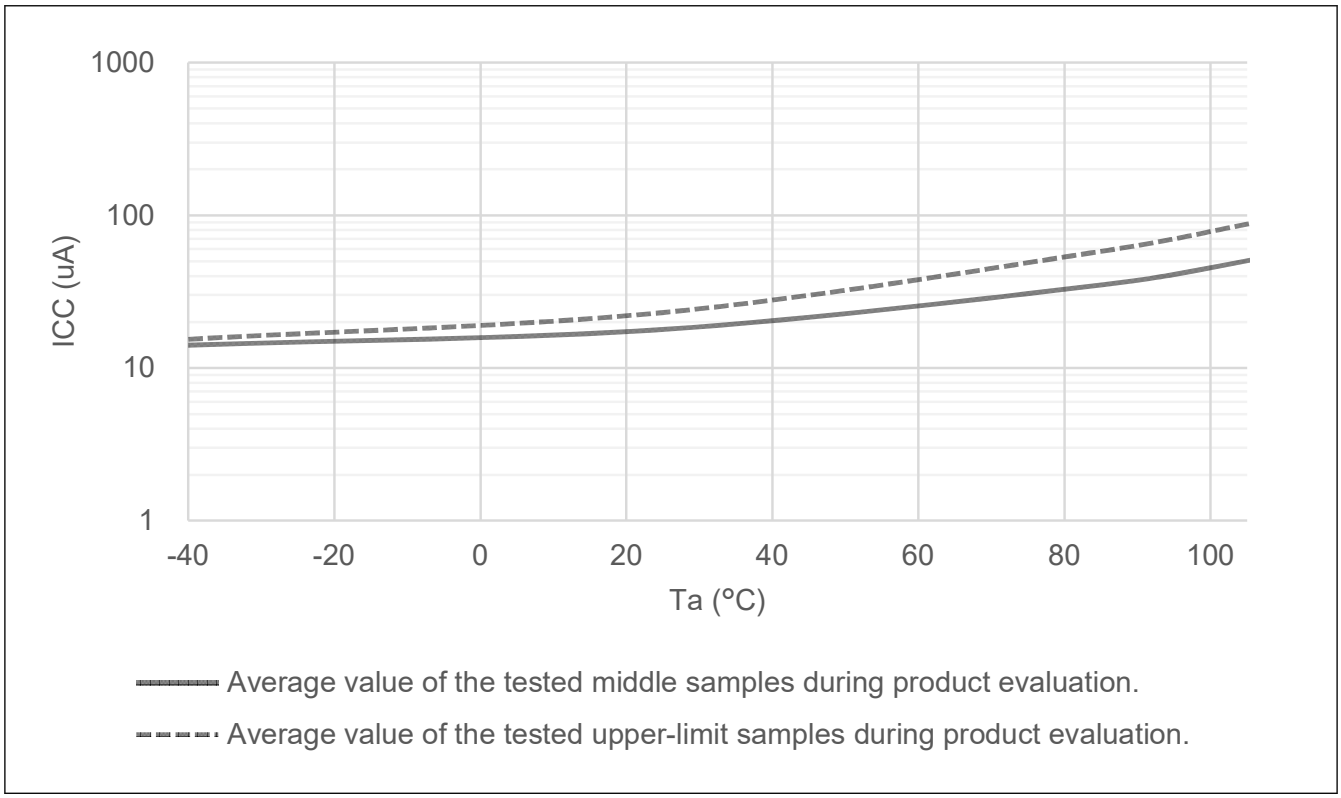

Figure 2.3 Temperature dependency in Deep Software Standby mode, power supplied to standby SRAM and USB resume detecting unit (reference data)

Downloaded from Arrow.com.

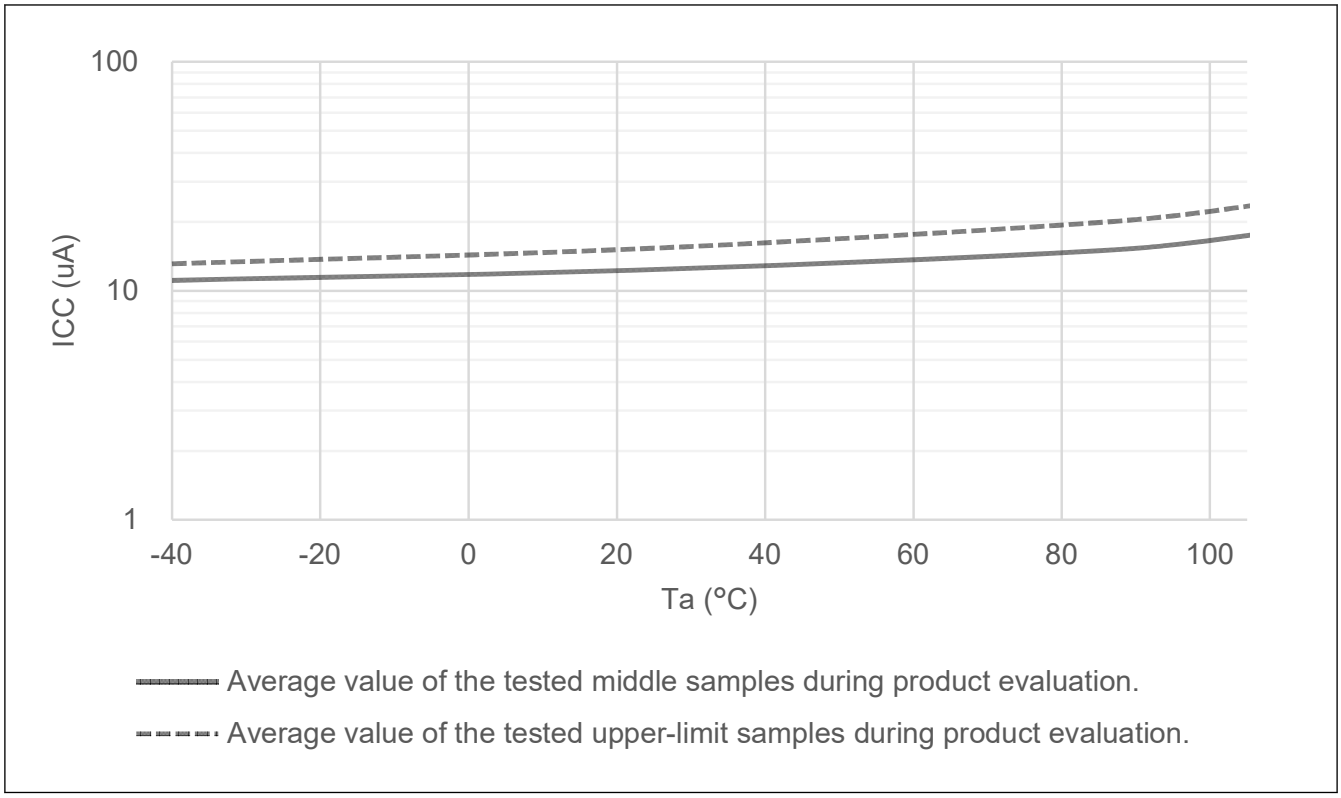

Figure 2.4 Temperature dependency in Deep Software Standby mode, power not supplied to SRAM or USB resume detecting unit, power-on reset circuit low power function disabled (reference data)

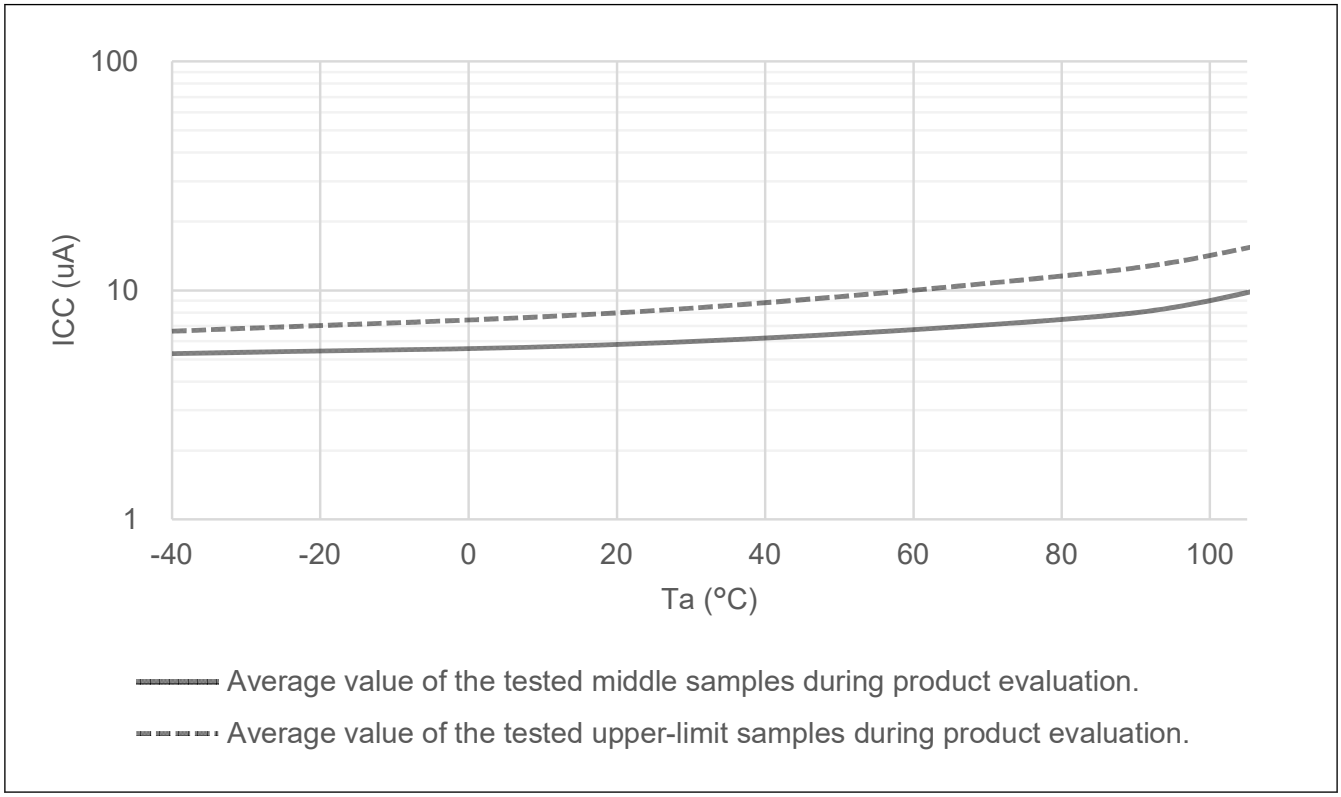

Figure 2.5 Temperature dependency in Deep Software Standby mode, power not supplied to SRAM or USB resume detecting unit, power-on reset circuit low power function enabled (reference data)

Downloaded from Arrow.com.

2.2.6 VCC Rise and Fall Gradient and Ripple Frequency

Table 2.9 Rise and fall gradient characteristics

Parameter		Symbol	Min	Typ	Max	Unit	Test conditions
VCC rising gradient	Voltage monitor 0 reset disabled at startup	SrVCC	0.0084	—	20	ms/V	—
	Voltage monitor 0 reset enabled at startup		0.0084	—	—		—
	SCI/USB boot mode*1		0.0084	—	20		—
VCC falling gradient*2		SfVCC	0.0084	—	—	ms/V	—

Note 1. At boot mode, the reset from voltage monitor 0 is disabled regardless of the value of the OFS1.LVDAS bit.
Note 2. This applies when VBATT is used.

Table 2.10 Rising and falling gradient and ripple frequency characteristics

The ripple voltage must meet the allowable ripple frequency $f_{r\ (VCC)}$ within the range between the VCC upper limit (3.6 V) and lower limit (2.7 V). When the VCC change exceeds VCC ±10%, the allowable voltage change rising and falling gradient dt/dVCC must be met.

Parameter	Symbol	Min	Typ	Max	Unit	Test conditions
Allowable ripple frequency	$f_{r\ (VCC)}$	—	—	10	kHz	Figure 2.6 $V_{r\ (VCC)} \leq$ VCC × 0.2
		—	—	1	MHz	Figure 2.6 $V_{r\ (VCC)} \leq$ VCC × 0.08
		—	—	10	MHz	Figure 2.6 $V_{r\ (VCC)} \leq$ VCC × 0.06
Allowable voltage change rising and falling gradient	dt/dVCC	1.0	—	—	ms/V	When VCC change exceeds VCC ±10%

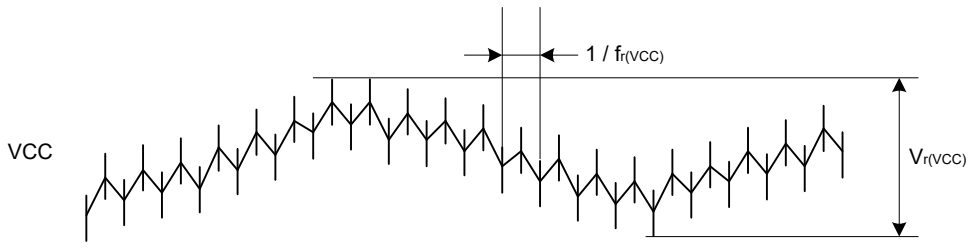

Figure 2.6 Ripple waveform

2.2.7 Thermal Characteristics

Maximum value of junction temperature (Tj) must not exceed the value of "section 2.2.1. Tj/Ta Definition".

Tj is calculated by either of the following equations.

- Tj = Ta + θja × Total power consumption
- Tj = Tt + Ψjt × Total power consumption
  - Tj : Junction Temperature (°C)
  - Ta : Ambient Temperature (°C)
  - Tt : Top Center Case Temperature (°C)
  - θja : Thermal Resistance of "Junction"-to-"Ambient" (°C/W)
  - Ψjt : Thermal Resistance of "Junction"-to-"Top Center Case" (°C/W)

Downloaded from Arrow.com.

- Total power consumption = Voltage × (Leakage current + Dynamic current)
- Leakage current of IO = Σ (I_{OL} × V_{OL}) /Voltage + Σ (|I_{OH}| × |VCC – V_{OH}|) /Voltage
- Dynamic current of IO = Σ IO (C_{in} + C_{load}) × IO switching frequency × Voltage
  - C_{in}: Input capacitance
  - C_{load}: Output capacitance

Regarding θja and Ψjt, see Table 2.11.

Table 2.11 Thermal Resistance

Parameter	Package	Symbol	Value*1	Unit	Test conditions
Thermal Resistance	64-pin LQFP (PLQP0064KB-C)	θja	38.0	°C/W	JESD 51-2 and 51-7 compliant
	100-pin LQFP (PLQP0100KB-B)		35.0		
	144-pin LQFP (PLQP0144KA-B)		33.0		
	64-pin BGA (PLBG0064JC-A)		38.0		JESD 51-2 and 51-9 compliant
	144-pin BGA (PLBG0144KB-A)		40.5		
	64-pin LQFP (PLQP0064KB-C)	Ψjt	0.80	°C/W	JESD 51-2 and 51-7 compliant
	100-pin LQFP (PLQP0100KB-B)		0.76		
	144-pin LQFP (PLQP0144KA-B)		0.63		
	64-pin BGA (PLBG0064JC-A)		0.74		JESD 51-2 and 51-9 compliant
	144-pin BGA (PLBG0144KB-A)		0.81		

Note 1. The values are reference values when the 4-layer board is used. Thermal resistance depends on the number of layers or size of the board. For details, refer to the JEDEC standards.

2.2.7.1 Calculation guide of I_{CC}max

Table 2.12 shows the power consumption of each unit.

Table 2.12 Power consumption of each unit (1 of 2)

Dynamic current/ Leakage current	MCU Domain	Category	Item	Frequency [MHz]	Current [uA/MHz]	Current*1 [mA]
Leakage current	Analog	LDO and Leak*2	Ta = 75 °C*3	—	—	21.22
			Ta = 85 °C*3	—	—	25.22
			Ta = 95 °C*3	—	—	30.22
			Ta = 105 °C*3	—	—	37.42

Downloaded from Arrow.com.

Table 2.12 Power consumption of each unit (2 of 2)

Dynamic current/ Leakage current	MCU Domain	Category	Item	Frequency [MHz]	Current [uA/MHz]	Current*1 [mA]
Dynamic current	CPU	Operation with Flash and SRAM	Coremark	200	86.357	17.27
	Peripheral Unit	Timer	GPT16 (6ch)*4	100	5.300	0.53
			GPT32 (4ch)*4	100	3.946	0.39
			POEG (4 Groups)*4	50	1.378	0.07
			AGT (6ch)*4	50	10.095	0.50
			RTC	50	5.239	0.26
			WDT	50	0.722	0.04
			IWDT	50	0.267	0.01
		Communication interfaces	ETHERC	100	7.651	0.77
			USBFS	50	8.788	0.44
			SCI (10ch)*4	100	25.595	2.56
			IIC (2ch)*4	50	3.014	0.15
			CAN (2ch)*4	50	3.843	0.19
			SPI (2ch)*4	100	6.770	0.68
			OSPI	50	32.530	1.63
			QSPI	100	2.587	0.26
			SSIE	50	3.131	0.16
			SDHI	50	7.074	0.35
		Analog	ADC12 (2 Unit)*4	100	4.697	0.47
			DAC12 (2ch)*4	100	3.543	0.35
			TSN	50	0.166	0.01
		Human machine interfaces	CTSU	50	0.678	0.03
		Event link	ELC	50	1.016	0.05
		Security	SCE9	100	218.100	21.81
		Data processing	CRC	100	0.521	0.05
			DOC	100	0.358	0.04
		System	CAC	50	0.909	0.05
		DMA	DMAC	200	4.045	0.81
			DTC	200	3.720	0.74

Note 1. The values are guaranteed by design.
Note 2. LDO and Leak are internal voltage regulator's current and MCU's leakage current.
It is selected according to the temperature of Ta.
Note 3. Δ(Tj-Ta) = 20 °C is considered to measure the current.
Note 4. To determine the current consumption per channel or unit, divide Current [mA] by the number of channels, groups or units.

Table 2.13 shows the outline of operation for each unit.

Table 2.13 Outline of operation for each unit (1 of 2)

Peripheral	Outline of operation
GPT	Operating modes is set to saw-wave PWM mode. GPT is operating with PCLKD.
POEG	Only clear module stop bit.

Downloaded from Arrow.com.

Table 2.13 Outline of operation for each unit (2 of 2)

Peripheral	Outline of operation
AGT	AGT is operating with PCLKB.
RTC	RTC is operating with LOCO.
WDT	WDT is operating with PCLKB.
IWDT	IWDT is operating with IWDTCLK.
ETHERC	Operation modes is set to full-duplex mode. ETHERC is operating using Reduced Media Independent Interface (RMII).
USBFS	Transfer types is set to bulk transfer. USBFS is operating using Full-speed transfer (12 Mbps).
SCI	SCI is transmitting data in clock synchronous mode.
IIC	Communication format is set to I2C-bus format. IIC is transmitting data in master mode.
CAN	CAN is transmitting and receiving data in self-test mode 1.
SPI	SPI mode is set to SPI operation (4-wire method). SPI master/slave mode is set to master mode. SPI is transmitting 8-bit width data.
OSPI	Transfer mode is single continuous write mode. OSPI is issuing memory write command to OctaRAM.
QSPI	QSPI is issuing Fast Read Quad I/O Instruction.
SSIE	Communication mode is set to Master. System word length is set to 32 bits. Data word length is set to 20 bits. SSIE is transmitting data using I2S format.
SDHI	Transfer bus mode is set to 4-bit wide bus mode. SDHI is issuing CMD24 (single-block write).
ADC12	Resolution is set to 12-bit accuracy. Data registers is set to A/D-converted value addition mode. ADC12 is converting the analog input in continuous scan mode.
DAC12	DAC12 is outputting the conversion result while updating the value of data register.
TSN	TSN is operating.
CTSU	CTSU is operating in self-capacitance single scan mode.
ELC	Only clear module stop bit.
SCE9	SCE9 is executing built-in self test.
CRC	CRC is generating CRC code using 32-bit CRC32-C polynomial.
DOC	DOC is operating in data addition mode.
CAC	Measurement target clocks is set to PCLKB. Measurement reference clocks is set to PCLKB. CAC is measuring the clock frequency accuracy.
DMAC	Bit length of transfer data is set to 32 bits. Transfer mode is set to block transfer mode. DMAC is transferring data from SRAM0 to SRAM0.
DTC	Bit length of transfer data is set to 32 bits. Transfer mode is set to block transfer mode. DTC is transferring data from SRAM0 to SRAM0.

2.2.7.2 Example of T_j calculation

Assumption :

- Package 144-pin LQFP : θja = 33.0 °C/W
- Ta = 100 °C
- I_{CC}max = 70 mA

Downloaded from Arrow.com.

- VCC = 3.5 V (VCC = AVCC = VCC_USB)
- I_{OH} = 1 mA, V_{OH} = VCC – 0.5 V, 12 Outputs
- I_{OL} = 20 mA, V_{OL} = 1.0 V, 8 Outputs
- I_{OL} = 1 mA, V_{OL} = 0.5 V, 12 Outputs
- C_{in} = 8 pF, 32 pins, Input frequency = 10 MHz
- C_{load} = 30 pF, 32 pins, Output frequency = 10 MHz

Leakage current of IO = Σ (V_{OL} × I_{OL}) / Voltage + Σ ((VCC - V_{OH}) × I_{OH}) / Voltage
= (20 mA × 1 V) × 8 / 3.5 V + (1 mA × 0.5 V) × 12 / 3.5 V + ((VCC - (VCC - 0.5 V)) × 1 mA) × 12 / 3.5 V
= 45.7 mA + 1.71 mA + 1.71 mA
= 49.1 mA

Dynamic current of IO = Σ IO (C_{in} + C_{load}) × IO switching frequency × Voltage
= ((8 pF × 32) × 10 MHz + (30 pF × 32) × 10 MHz) × 3.5 V
= 42.6 mA

Total power consumption = (Iccmax × Voltage) + (Leakage current of IO + Dynamic current of IO) × Voltage
= (70 mA × 3.5 V) + (49.1 mA + 42.6 mA) × 3.5 V
= 566 mW (0.566 W)

Tj = Ta + θja × Total power consumption
= 100 °C + 33.0 °C/W × 0.566W
= 118.7 °C

2.3 AC Characteristics

2.3.1 Frequency

Table 2.14 Operation frequency value in high-speed mode

Parameter		Symbol	Min	Typ	Max	Unit
Operation frequency	System clock (ICLK)	f	—	—	200	MHz
	Peripheral module clock (PCLKA)		—	—	100	
	Peripheral module clock (PCLKB)		—	—	50	
	Peripheral module clock (PCLKC)		—*2	—	50	
	Peripheral module clock (PCLKD)		—	—	100	
	Flash interface clock (FCLK)		—*1	—	50	
	External bus clock (BCLK)		—	—	100	
	EBCLK pin output		—	—	50	

Note 1. FCLK must run at a frequency of at least 4 MHz when programming or erasing the flash memory.
Note 2. When the ADC12 is used, the PCLKC frequency must be at least 1 MHz.

Downloaded from Arrow.com.

Table 2.15 Operation frequency value in low-speed mode

Parameter		Symbol	Min	Typ	Max	Unit
Operation frequency	System clock (ICLK)	f	—	—	1	MHz
	Peripheral module clock (PCLKA)		—	—	1	
	Peripheral module clock (PCLKB)		—	—	1	
	Peripheral module clock (PCLKC) *2		—*2	—	1	
	Peripheral module clock (PCLKD)		—	—	1	
	Flash interface clock (FCLK)*1		—	—	1	
	External bus clock (BCLK)		—	—	1	
	EBCLK pin output		—	—	1	

Note 1. Programming or erasing the flash memory is disabled in low-speed mode.
Note 2. When the ADC12 is used, the PCLKC frequency must be set to at least 1 MHz.

Table 2.16 Operation frequency value in Subosc-speed mode

Parameter		Symbol	Min	Typ	Max	Unit
Operation frequency	System clock (ICLK)	f	29.4	—	36.1	kHz
	Peripheral module clock (PCLKA)		—	—	36.1	
	Peripheral module clock (PCLKB)		—	—	36.1	
	Peripheral module clock (PCLKC) *2		—	—	36.1	
	Peripheral module clock (PCLKD)		—	—	36.1	
	Flash interface clock (FCLK)*1		29.4	—	36.1	
	External bus clock (BCLK)		—	—	36.1	
	EBCLK pin output		—	—	36.1	

Note 1. Programming or erasing the flash memory is disabled in Subosc-speed mode.
Note 2. The ADC12 cannot be used.

2.3.2 Clock Timing

Table 2.17 Clock timing except for sub-clock oscillator (1 of 2)

Parameter	Symbol	Min	Typ	Max	Unit	Test conditions
EBCLK pin output cycle time	t_{Bcyc}	20	—	—	ns	Figure 2.7
EBCLK pin output high pulse width	t_{CH}	3.3	—	—	ns	
EBCLK pin output low pulse width	t_{CL}	3.3	—	—	ns	
EBCLK pin output rise time	t_{Cr}	—	—	5.0	ns	
EBCLK pin output fall time	t_{Cf}	—	—	5.0	ns	
EXTAL external clock input cycle time	t_{EXcyc}	41.66	—	—	ns	Figure 2.8
EXTAL external clock input high pulse width	t_{EXH}	15.83	—	—	ns	
EXTAL external clock input low pulse width	t_{EXL}	15.83	—	—	ns	
EXTAL external clock rise time	t_{EXr}	—	—	5.0	ns	
EXTAL external clock fall time	t_{EXf}	—	—	5.0	ns	
Main clock oscillator frequency	f_{MAIN}	8	—	24	MHz	—
Main clock oscillation stabilization wait time (crystal)*1	$t_{MAINOSCWT}$	—	—	—*1	ms	Figure 2.9
LOCO clock oscillation frequency	f_{LOCO}	29.4912	32.768	36.0448	kHz	—
LOCO clock oscillation stabilization wait time	t_{LOCOWT}	—	—	60.4	μs	Figure 2.10
ILOCO clock oscillation frequency	f_{ILOCO}	13.5	15	16.5	kHz	—

Downloaded from Arrow.com.

Table 2.17 Clock timing except for sub-clock oscillator (2 of 2)

Parameter		Symbol	Min	Typ	Max	Unit	Test conditions
MOCO clock oscillation frequency		f_{MOCO}	6.8	8	9.2	MHz	—
MOCO clock oscillation stabilization wait time		t_{MOCOWT}	—	—	15.0	μs	—
HOCO clock oscillator oscillation frequency	Without FLL	f_{HOCO16}	15.78	16	16.22	MHz	–20 ≤ Ta ≤ 105°C
		f_{HOCO18}	17.75	18	18.25		
		f_{HOCO20}	19.72	20	20.28		
		f_{HOCO16}	15.71	16	16.29		–40 ≤ Ta ≤ –20°C
		f_{HOCO18}	17.68	18	18.32		
		f_{HOCO20}	19.64	20	20.36		
	With FLL	f_{HOCO16}	15.960	16	16.040		–40 ≤ Ta ≤ 105°C Sub-clock frequency accuracy is ±50 ppm.
		f_{HOCO18}	17.955	18	18.045		
		f_{HOCO20}	19.950	20	20.050		
HOCO clock oscillation stabilization wait time*2		t_{HOCOWT}	—	—	64.7	μs	—
HOCO period jitter		—	—	±85	—	ps	—
FLL stabilization wait time		t_{FLLWT}	—	—	1.8	ms	—
PLL clock frequency		f_{PLL}	120	—	200	MHz	—
PLL2 clock frequency		f_{PLL2}	120	—	240	MHz	—
PLL/PLL2 clock oscillation stabilization wait time		t_{PLLWT}	—	—	174.9	μs	Figure 2.11
PLL/PLL2 period jitter		—	—	±100	—	ps	—
PLL/PLL2 long term jitter		—	—	±300	—	ps	Term: 1μs, 10μs

Note 1. When setting up the main clock oscillator, ask the oscillator manufacturer for an oscillation evaluation, and use the results as the recommended oscillation stabilization time. Set the MOSCWTCR register to a value equal to or greater than the recommended value.
After changing the setting in the MOSCCR.MOSTP bit to start main clock operation, read the OSCSF.MOSCSF flag to confirm that it is 1, and then start using the main clock oscillator.

Note 2. This is the time from release from reset state until the HOCO oscillation frequency (f_{HOCO}) reaches the range for guaranteed operation.

Table 2.18 Clock timing for the sub-clock oscillator

Parameter	Symbol	Min	Typ	Max	Unit	Test conditions
Sub-clock frequency	f_{SUB}	—	32.768	—	kHz	—
Sub-clock oscillation stabilization wait time	$t_{SUBOSCWT}$	—	—	—*1	s	Figure 2.12

Note 1. When setting up the sub-clock oscillator, ask the oscillator manufacturer for an oscillation evaluation and use the results as the recommended oscillation stabilization time.
After changing the setting in the SOSCCR.SOSTP bit to start sub-clock operation, only start using the sub-clock oscillator after the sub-clock oscillation stabilization time elapses with an adequate margin. A value that is two times the value shown is recommended.

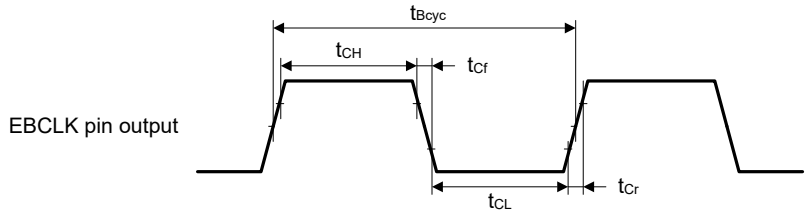

Figure 2.7 EBCLK output timing

Downloaded from Arrow.com.

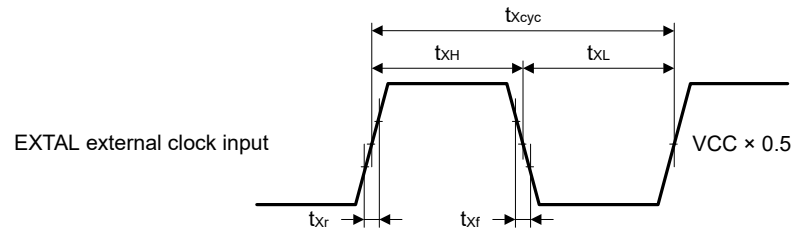

Figure 2.8 EXTAL external clock input timing

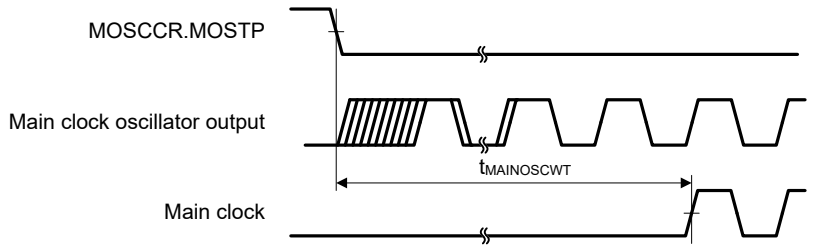

Figure 2.9 Main clock oscillation start timing

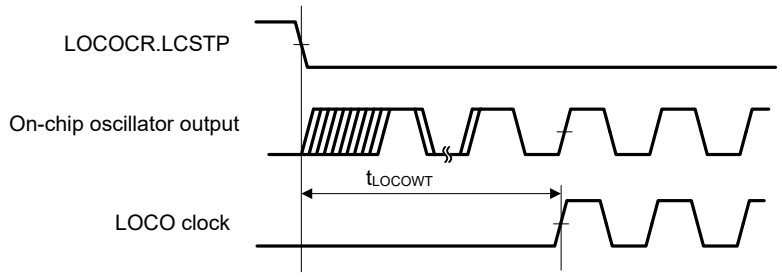

Figure 2.10 LOCO clock oscillation start timing

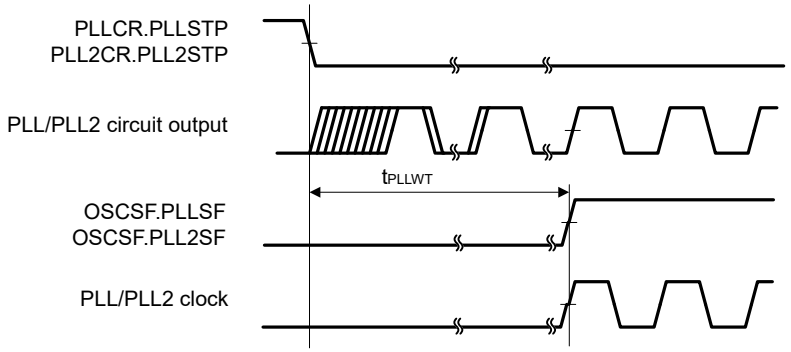

Figure 2.11 PLL/PLL2 clock oscillation start timing

Downloaded from Arrow.com.

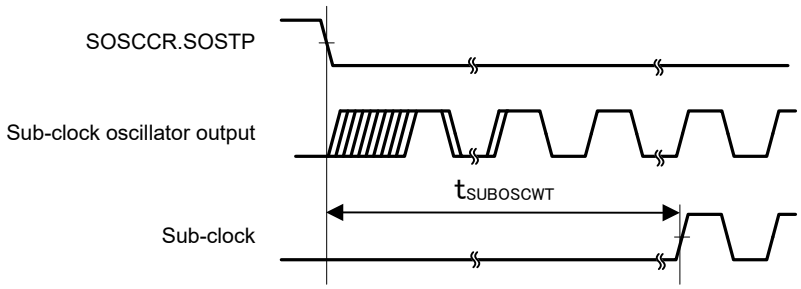

Figure 2.12 Sub-clock oscillation start timing

2.3.3 Reset Timing

Table 2.19 Reset timing

Parameter		Symbol	Min	Typ	Max	Unit	Test conditions
RES pulse width	Power-on	t_{RESWP}	0.7	—	—	ms	Figure 2.13
	Deep Software Standby mode	t_{RESWD}	0.6	—	—	ms	Figure 2.14
	Software Standby mode, Subosc-speed mode	t_{RESWS}	0.3	—	—	ms	
	All other	t_{RESW}	200	—	—	μs	
Wait time after RES cancellation		t_{RESWT}	—	37.3	41.2	μs	Figure 2.13
Wait time after internal reset cancellation (IWDT reset, WDT reset, software reset, SRAM parity error reset, SRAM ECC error reset, bus master MPU error reset, TrustZone error reset, Cache parity error reset)		t_{RESW2}	—	324	397.7	μs	—

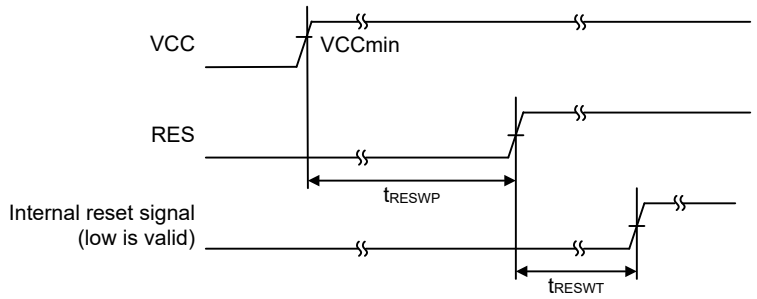

Figure 2.13 RES pin input timing under the condition that VCC exceeds V_{POR} voltage threshold

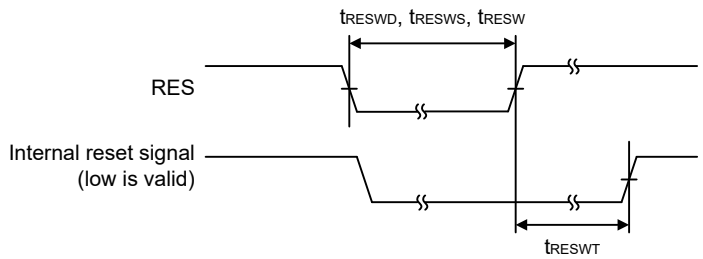

Figure 2.14 Reset input timing

Downloaded from Arrow.com.

2.3.4 Wakeup Timing

Table 2.20 Timing of recovery from low power modes

Parameter			Symbol	Min	Typ	Max	Unit	Test conditions
Recovery time from Software Standby mode[*1]	Crystal resonator connected to main clock oscillator	System clock source is main clock oscillator[*2]	t_{SBYMC}[*13]	—	2.1	2.4	ms	Figure 2.15 The division ratio of all oscillators is 1.
		System clock source is PLL with main clock oscillator[*3]	t_{SBYPC}[*13]	—	2.2	2.6	ms	
	External clock input to main clock oscillator	System clock source is main clock oscillator[*4]	t_{SBYEX}[*13]	—	45	125	μs	
		System clock source is PLL with main clock oscillator[*5]	t_{SBYPE}[*13]	—	170	255	μs	
	System clock source is sub-clock oscillator[*6 *11]		t_{SBYSC}[*13]	—	0.7	0.8	ms	
	System clock source is LOCO[*7 *11]		t_{SBYLO}[*13]	—	0.7	0.9	ms	
	System clock source is HOCO clock oscillator[*8]		t_{SBYHO}[*13]	—	55	130	μs	
	System clock source is PLL with HOCO[*9]		t_{SBYPH}[*13]	—	175	265	μs	
	System clock source is MOCO clock oscillator[*10]		t_{SBYMO}[*13]	—	35	65	μs	
Recovery time from Deep Software Standby mode	DPSBYCR.DEEPCUT[1] = 0 and DPSWCR.WTSTS [5:0] = 0x0E		t_{DSBY}	—	0.38	0.54	ms	Figure 2.16
	DPSBYCR.DEEPCUT[1] = 1 and DPSWCR.WTSTS [5:0] = 0x19		t_{DSBY}	—	0.55	0.73	ms	
Wait time after cancellation of Deep Software Standby mode			t_{DSBYWT}	56	—	57	t_{cyc}	
Recovery time from Software Standby mode to Snooze mode	High-speed mode when system clock source is HOCO (20 MHz)		t_{SNZ}	—	35[*12]	70[*12]	μs	Figure 2.17
	High-speed mode when system clock source is MOCO (8 MHz)		t_{SNZ}	—	11[*12]	14[*12]	μs	

Note 1. The recovery time is determined by the system clock source. When multiple oscillators are active, the recovery time can be determined with the following equation:
Total recovery time = recovery time for an oscillator as the system clock source + the longest $t_{SBYOSCWT}$ in the active oscillators - $t_{SBYOSCWT}$ for the system clock + 2 LOCO cycles (when LOCO is operating) + Subosc is oscillating and MSTPC0 = 0 (CAC module stop)
Note 2. When the frequency of the crystal is 24 MHz (Main Clock Oscillator Wait Control Register (MOSCWTCR) is set to 0x05) and the greatest value of the internal clock division setting is 1.
Note 3. When the frequency of PLL is 200 MHz (Main Clock Oscillator Wait Control Register (MOSCWTCR) is set to 0x05) and the greatest value of the internal clock division setting is 4.
Note 4. When the frequency of the external clock is 24 MHz (Main Clock Oscillator Wait Control Register (MOSCWTCR) is set to 0x00) and the greatest value of the internal clock division setting is 1.
Note 5. When the frequency of PLL is 200 MHz (Main Clock Oscillator Wait Control Register (MOSCWTCR) is set to 0x00) and the greatest value of the internal clock division setting is 4.
Note 6. The Sub-clock oscillator frequency is 32.768 kHz and the greatest value of the internal clock division setting is 1.
Note 7. The LOCO frequency is 32.768 kHz and the greatest value of the internal clock division setting is 1.
Note 8. The HOCO frequency is 20 MHz and the greatest value of the internal clock division setting is 1.
Note 9. The PLL frequency is 200 MHz and the greatest value of the internal clock division setting is 4.
Note 10. The MOCO frequency is 8 MHz and the greatest value of the internal clock division setting is 1.
Note 11. In Subosc-speed mode, the sub-clock oscillator or LOCO continues oscillating in Software Standby mode.
Note 12. When the SNZCR.RXDREQEN bit is set to 0, the following time is added as the power supply recovery time: 16 μs (typical), 48 μs (maximum).
Note 13. The recovery time can be calculated with the equation of $t_{SBYOSCWT}$ + t_{SBYSEQ}. And they can be determined with the following value and equation. For n, the greatest value is selected from among the internal clock division settings.

Wakeup time	TYP		MAX		Unit
	$t_{SBYOSCWT}$	t_{SBYSEQ}	$t_{SBYOSCWT}$	t_{SBYSEQ}	
t_{SBYMC}	(MSTS[7:0] × 32 + 3) / 0.262	35 + 18 / f_{ICLK} + 4n / f_{MAIN}	(MSTS[7:0] × 32 + 14 / 0.236	62 + 18 / f_{ICLK} + 4n / f_{MAIN}	μs

Downloaded from Arrow.com.

Wakeup time	TYP		MAX		Unit
	$t_{SBYOSCWT}$	t_{SBYSEQ}	$t_{SBYOSCWT}$	t_{SBYSEQ}	
t_{SBYPC}	(MSTS[7:0] × 32 + 34) / 0.262	35 + 18 / f_{ICLK} + 4n / f_{PLL}	(MSTS[7:0] × 32 + 45) / 0.236	62 + 18 / f_{ICLK} + 4n / f_{PLL}	μs
t_{SBYEX}	10	35 + 18 / f_{ICLK} + 4n / f_{EXMAIN}	62	62 + 18 / f_{ICLK} + 4n / f_{EXMAIN}	μs
t_{SBYPE}	135	35 + 18 / f_{ICLK} + 4n / f_{PLL}	192	62 + 18 / f_{ICLK} + 4n / f_{PLL}	μs
t_{SBYSC}	0	35 + 18 / f_{ICLK} + 4n / f_{SUB}	0	62 + 18 / f_{ICLK} + 4n / f_{SUB}	μs
t_{SBYLO}	0	35 + 18 / f_{ICLK} + 4n / f_{LOCO}	0	62 + 18 / f_{ICLK} + 4n / f_{LOCO}	μs
t_{SBYHO}	20	35 + 18 / f_{ICLK} + 4n / f_{HOCO}	67	62 + 18 / f_{ICLK} + 4n / f_{HOCO}	μs
t_{SBYPH}	140	35 + 18 / f_{ICLK} + 4n / f_{PLL}	202	62 + 18 / f_{ICLK} + 4n / f_{PLL}	μs
t_{SBYMO}	0	35 + 18 / f_{ICLK} + 4n / f_{MOCO}	0	62 + 18 / f_{ICLK} + 4n / f_{MOCO}	μs

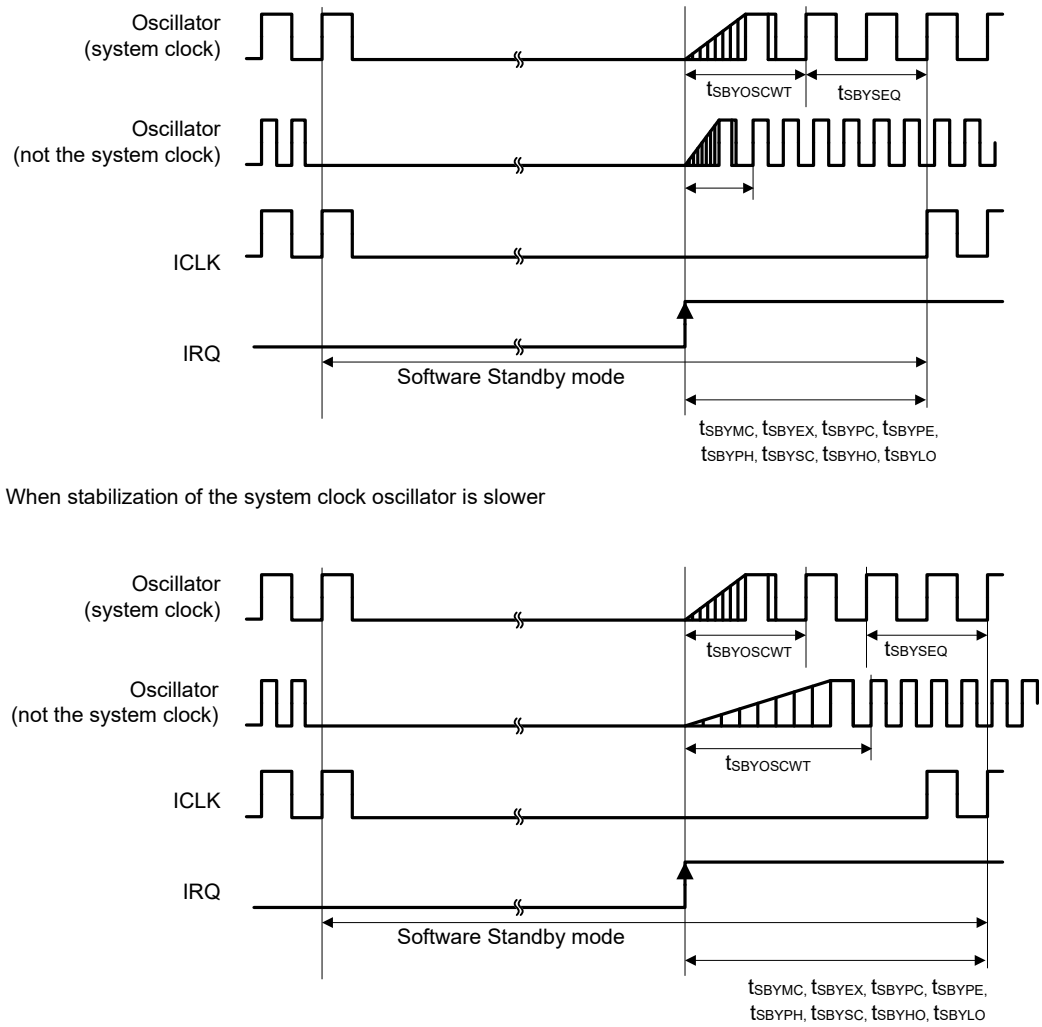

Figure 2.15 Software Standby mode cancellation timing

Downloaded from Arrow.com.

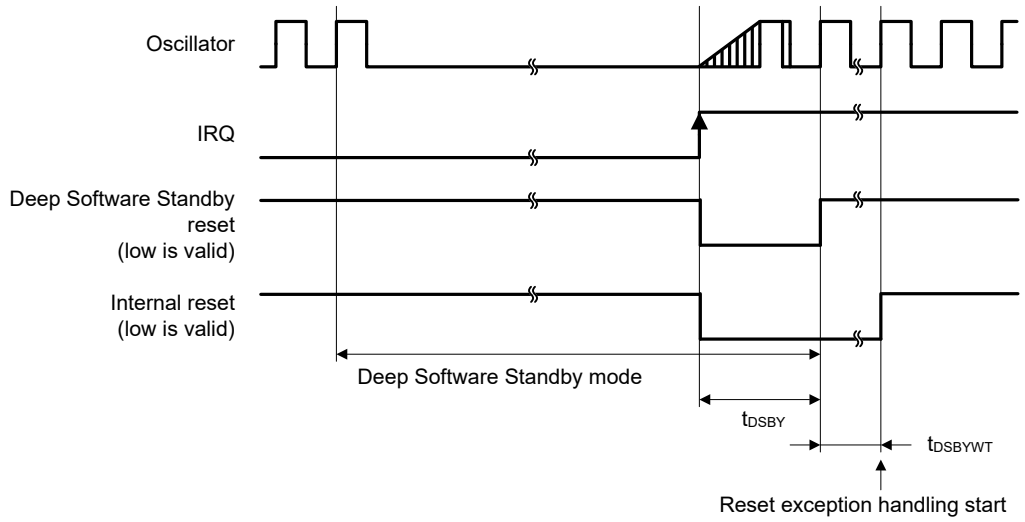

Figure 2.16 Deep Software Standby mode cancellation timing

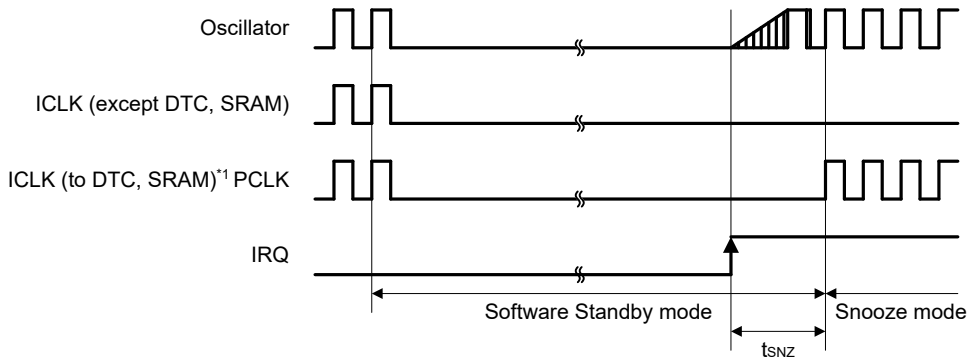

Note 1. When SNZCR.SNZDTCEN bit is set to 1, ICLK is supplied to DTC and SRAM.

Figure 2.17 Recovery timing from Software Standby mode to Snooze mode

2.3.5 NMI and IRQ Noise Filter

Table 2.21 NMI and IRQ noise filter

Parameter	Symbol	Min	Typ	Max	Unit	Test conditions	
NMI pulse width	t_{NMIW}	200	—	—	ns	NMI digital filter disabled	$t_{Pcyc} \times 2 \leq 200$ ns
		$t_{Pcyc} \times 2$*1	—	—			$t_{Pcyc} \times 2 > 200$ ns
		200	—	—		NMI digital filter enabled	$t_{NMICK} \times 3 \leq 200$ ns
		$t_{NMICK} \times 3.5$*2	—	—			$t_{NMICK} \times 3 > 200$ ns
IRQ pulse width	t_{IRQW}	200	—	—	ns	IRQ digital filter disabled	$t_{Pcyc} \times 2 \leq 200$ ns
		$t_{Pcyc} \times 2$*1	—	—			$t_{Pcyc} \times 2 > 200$ ns
		200	—	—		IRQ digital filter enabled	$t_{IRQCK} \times 3 \leq 200$ ns
		$t_{IRQCK} \times 3.5$*3	—	—			$t_{IRQCK} \times 3 > 200$ ns

Downloaded from Arrow.com.

Note: 200 ns minimum in Software Standby mode.
Note: If the clock source is switched, add 4 clock cycles of the switched source.
Note 1. t_{Pcyc} indicates the PCLKB cycle.
Note 2. t_{NMICK} indicates the cycle of the NMI digital filter sampling clock.
Note 3. t_{IRQCK} indicates the cycle of the IRQi digital filter sampling clock.

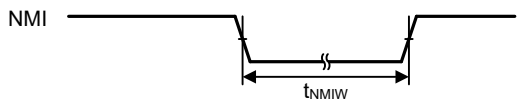

Figure 2.18 NMI interrupt input timing

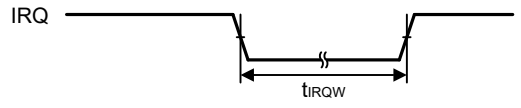

Figure 2.19 IRQ interrupt input timing

2.3.6 Bus Timing

Table 2.22 Bus timing

Condition:
Output load conditions: VOH = VCC × 0.5, VOL = VCC × 0.5, C = 30 pF.
EBCLK: High drive output is selected in the Port Drive Capability bit in the PmnPFS register.
Others: Middle drive output is selected in the Port Drive Capability bit in the PmnPFS register.

Parameter	Symbol	Min	Max	Unit	Test conditions
Address delay	t_{AD}	—	12.5	ns	Figure 2.22 to Figure 2.25
Byte control delay	t_{BCD}	—	12.5	ns	
CS delay	t_{CSD}	—	12.5	ns	
ALE delay time	t_{ALED}	—	12.5	ns	
RD delay	t_{RSD}	—	12.5	ns	
Read data setup time	t_{RDS}	12.5	—	ns	
Read data hold time	t_{RDH}	0	—	ns	
WR/WRn delay	t_{WRD}	—	12.5	ns	
Write data delay	t_{WDD}	—	12.5	ns	
Write data hold time	t_{WDH}	0	—	ns	
WAIT setup time	t_{WTS}	12.5	—	ns	Figure 2.26
WAIT hold time	t_{WTH}	0	—	ns	

Downloaded from Arrow.com.

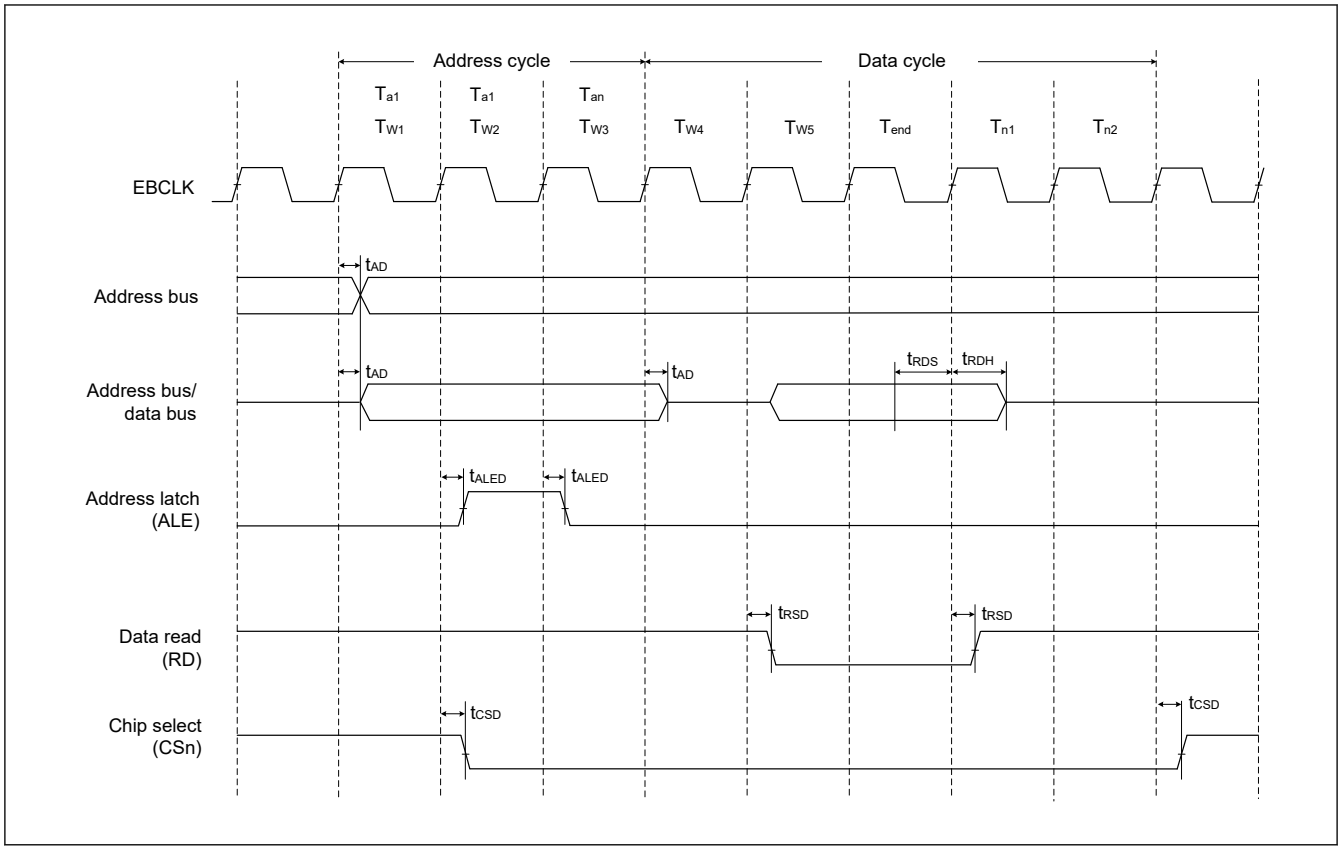

Figure 2.20 Address/data multiplexed bus read access timing

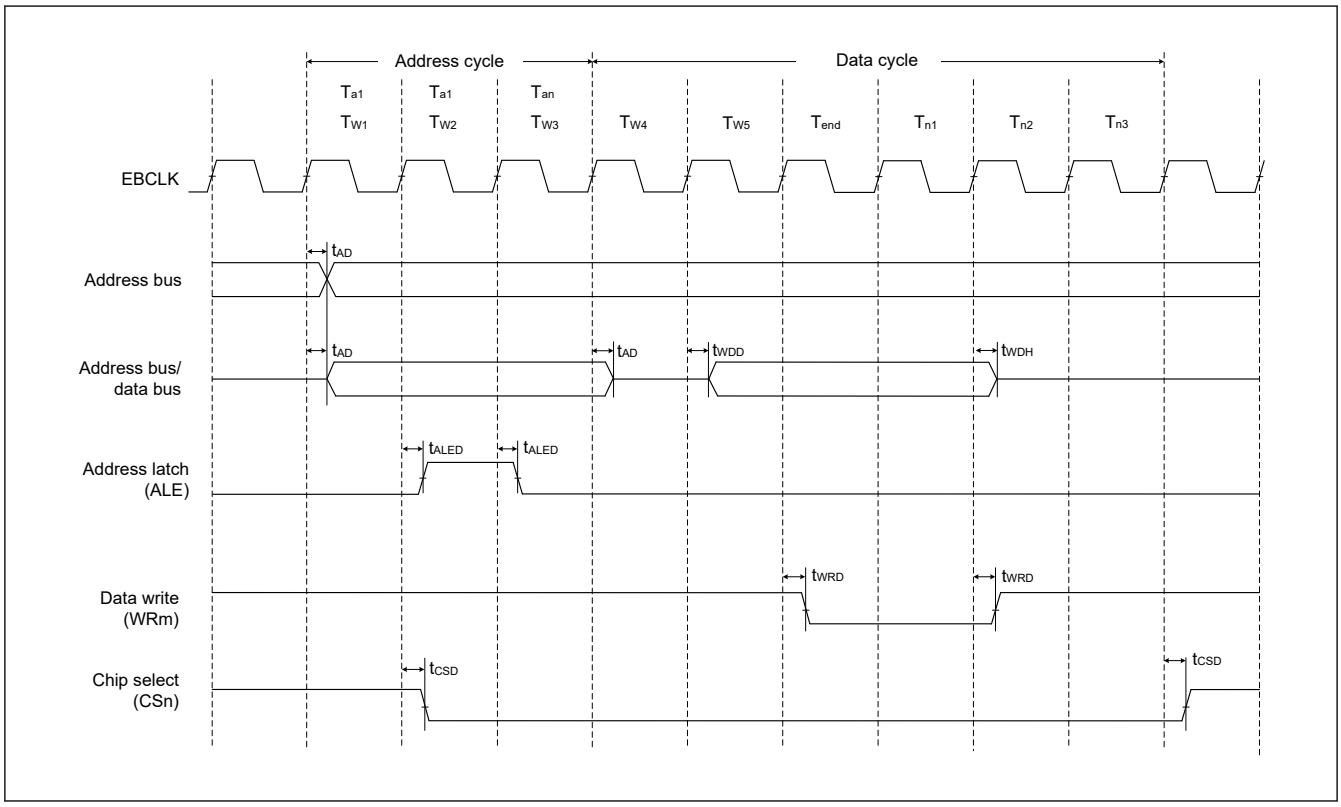

Figure 2.21 Address/data multiplexed bus write access timing

Downloaded from Arrow.com.

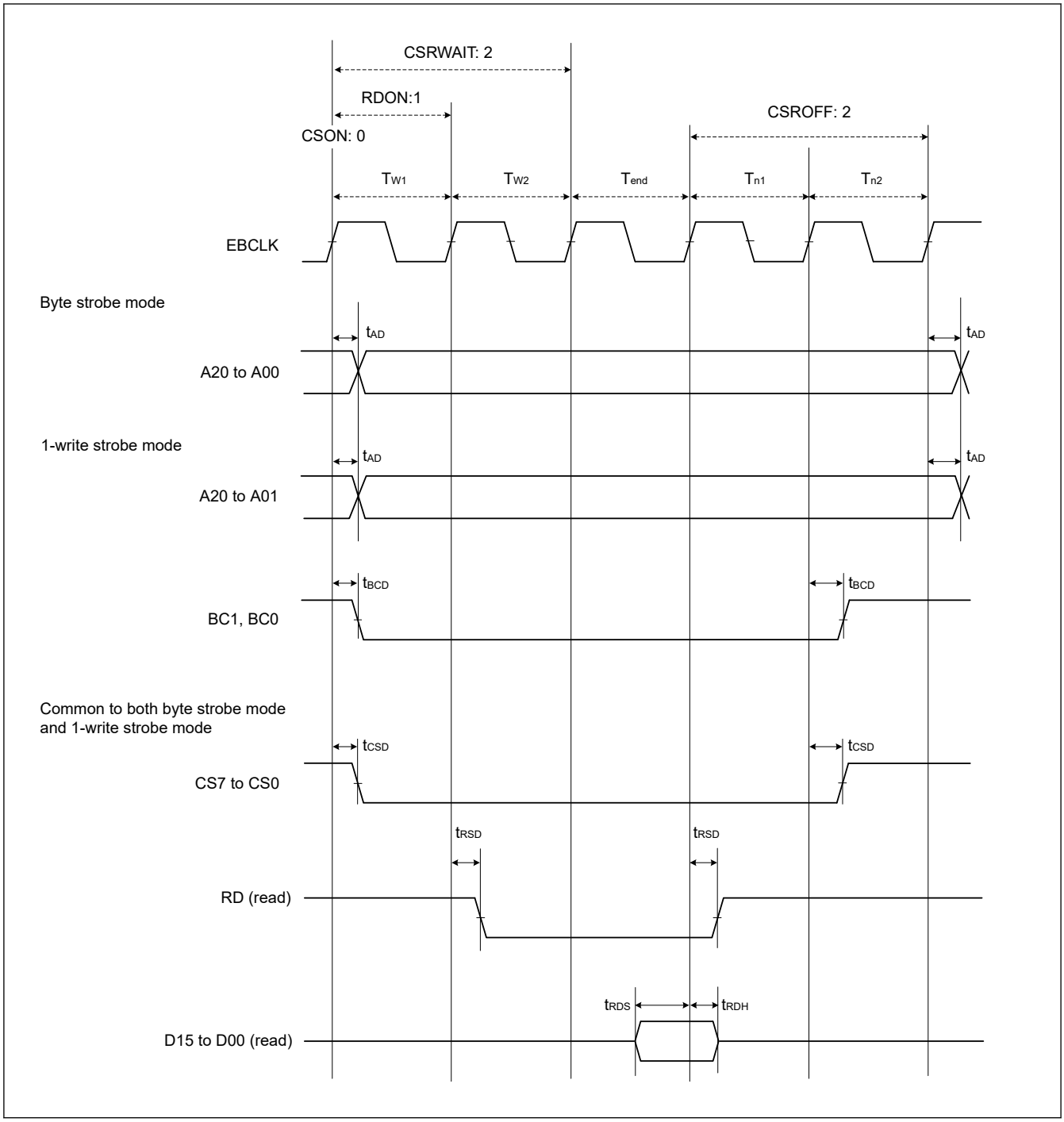

Figure 2.22 External bus timing for normal read cycle with bus clock synchronized

Downloaded from Arrow.com.

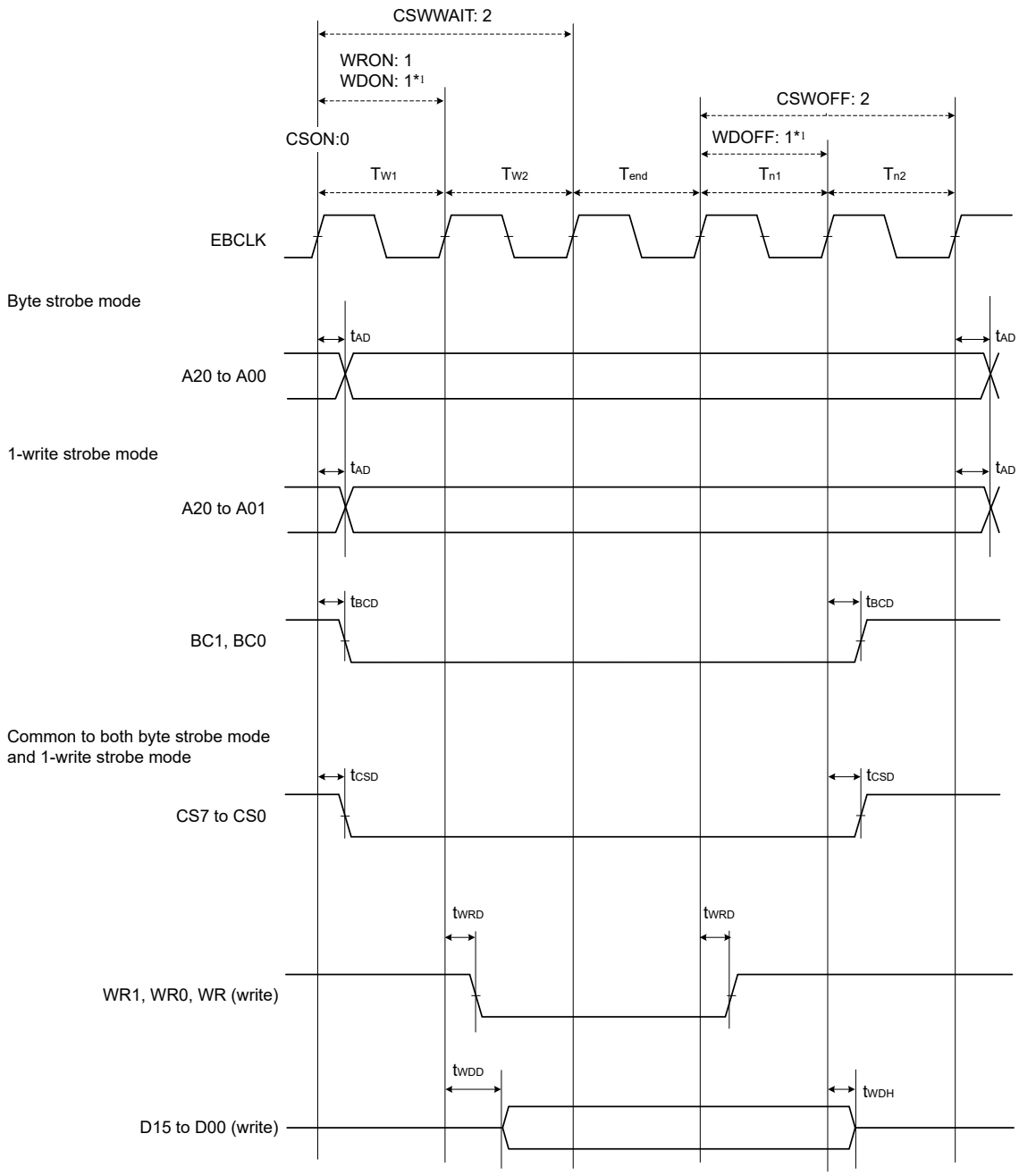

Note 1. Always specify WDON and WDOFF as at least one EBCLK cycle.

Figure 2.23 External bus timing for normal write cycle with bus clock synchronized

Downloaded from Arrow.com.

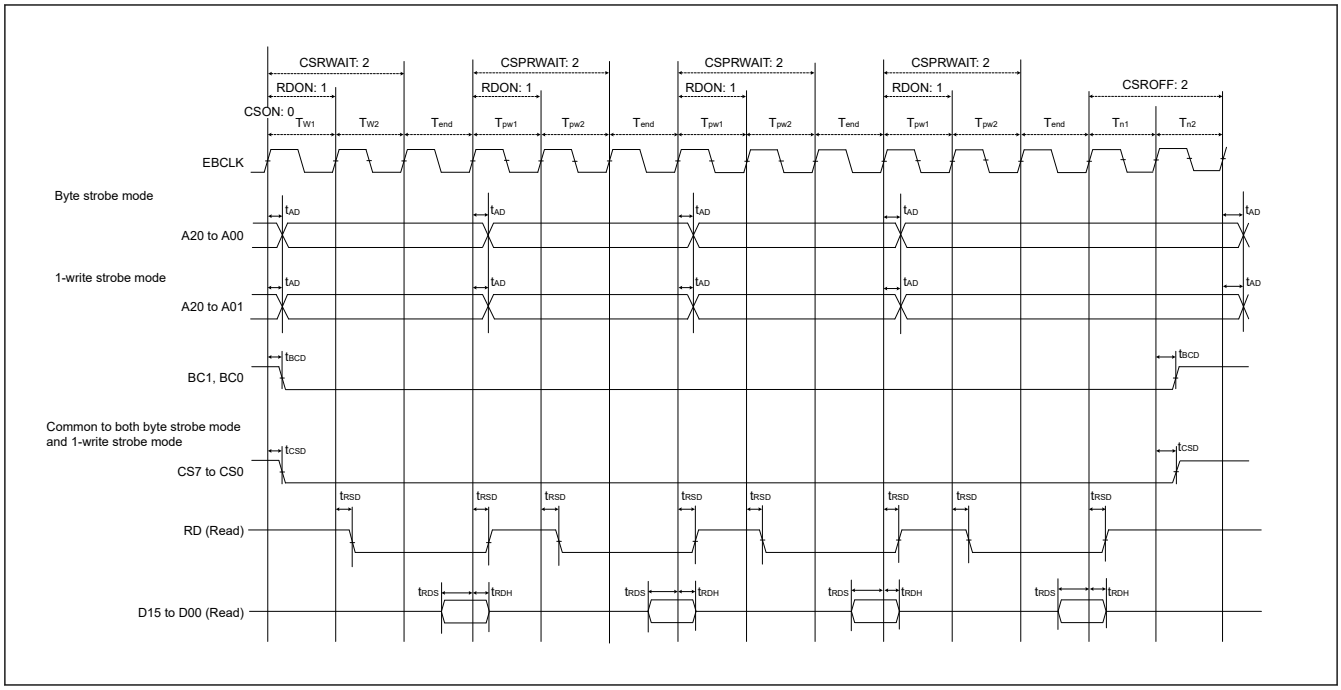

Figure 2.24 External bus timing for page read cycle with bus clock synchronized

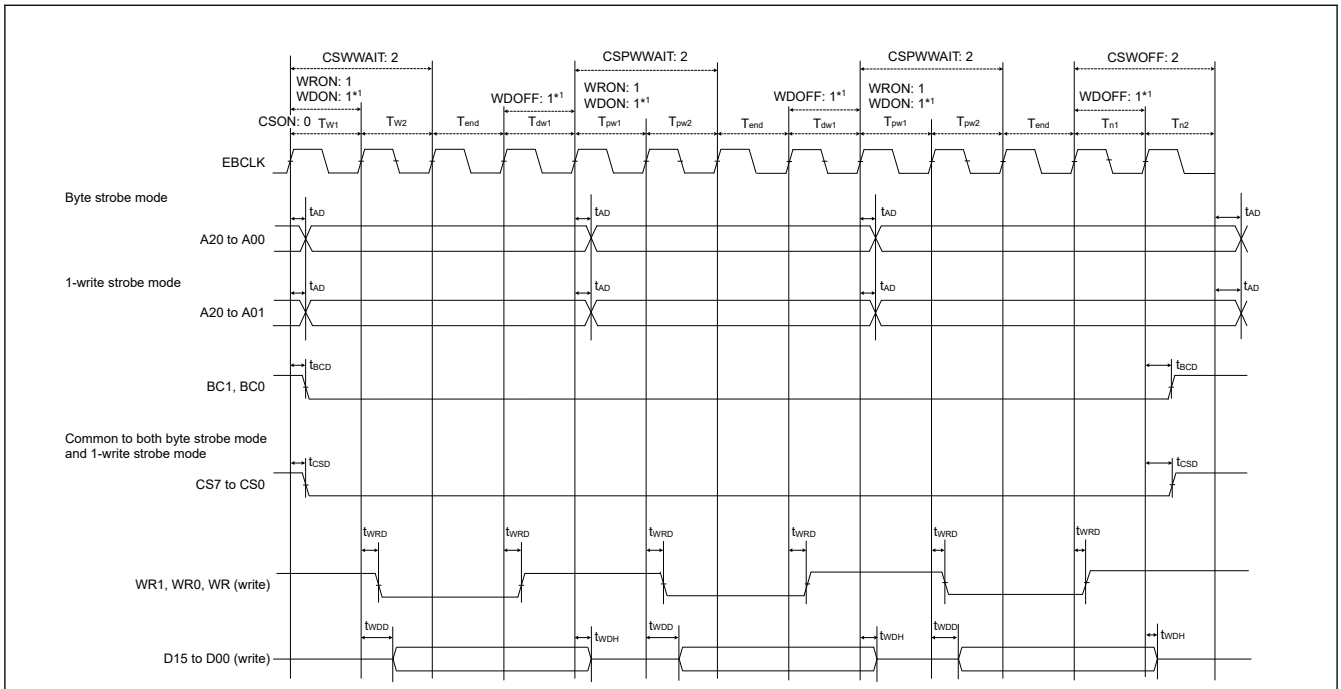

Note 1. Always specify WDON and WDOFF as at least one EBCLK cycle.

Figure 2.25 External bus timing for page write cycle with bus clock synchronized

Downloaded from Arrow.com.

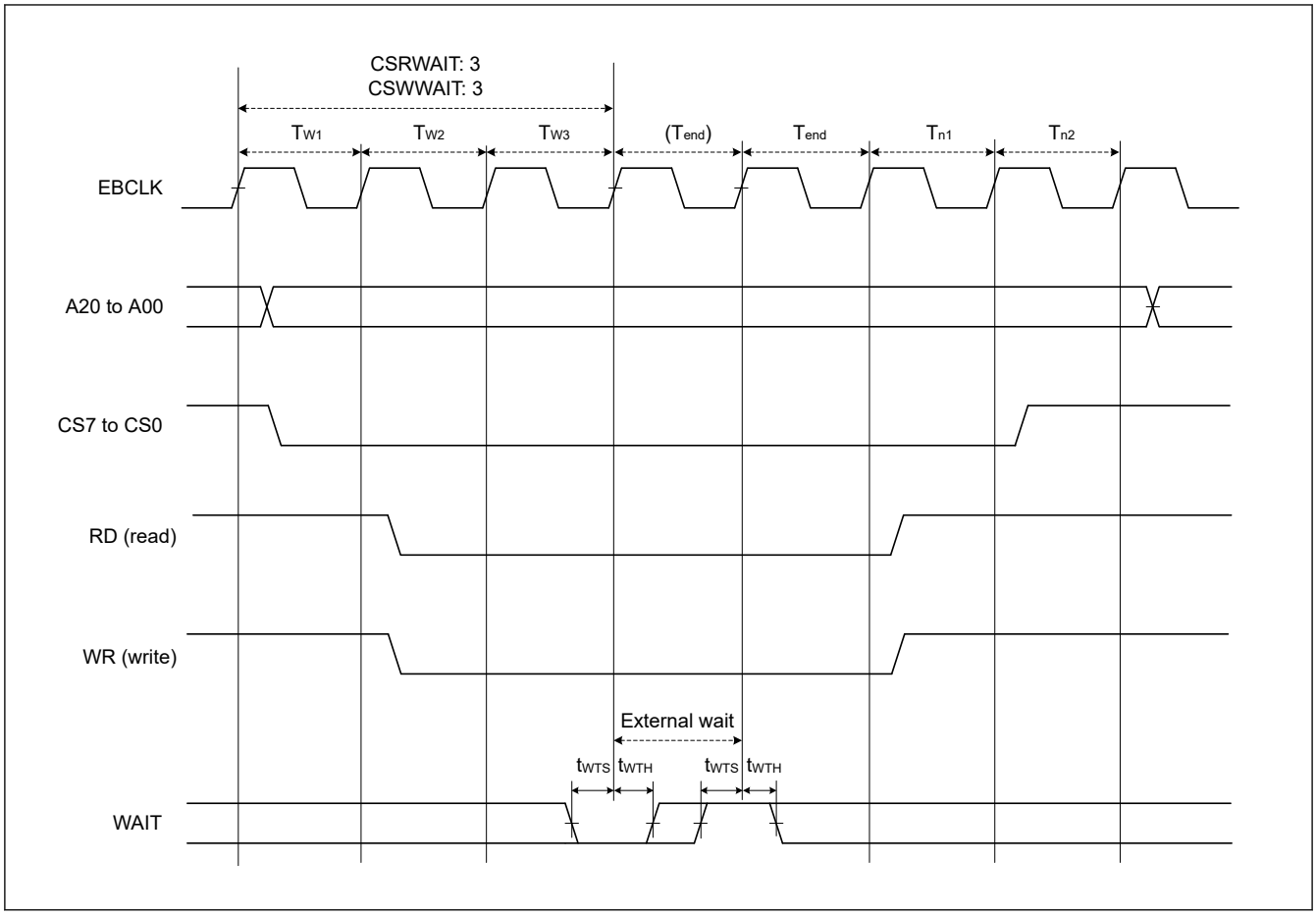

Figure 2.26 External bus timing for external wait control

2.3.7 I/O Ports, POEG, GPT, AGT, and ADC12 Trigger Timing

Table 2.23 I/O ports, POEG, GPT, AGT, and ADC12 trigger timing (1 of 2)

GPT32 Conditions:
High drive output is selected in the Port Drive Capability bit in the PmnPFS register.
AGT Conditions:
Middle drive output is selected in the Port Drive Capability bit in the PmnPFS register.

Parameter			Symbol	Min	Max	Unit	Test conditions
I/O ports	Input data pulse width		t_{PRW}	1.5	—	t_{Pcyc}	Figure 2.27
POEG	POEG input trigger pulse width		t_{POEW}	3	—	t_{Pcyc}	Figure 2.28
GPT	Input capture pulse width	Single edge	t_{GTICW}	1.5	—	t_{PDcyc}	Figure 2.29
		Dual edge		2.5	—		
	GTIOCxY output skew (x = 0 to 3, Y = A or B)	Middle drive buffer	t_{GTISK}*1	—	4	ns	Figure 2.30
		High drive buffer		—	4		
	GTIOCxY output skew (x = 4 to 9, Y = A or B)	Middle drive buffer		—	4		
		High drive buffer		—	4		
	GTIOCxY output skew (x = 0 to 9, Y = A or B)	Middle drive buffer		—	6		
		High drive buffer		—	6		
	OPS output skew GTOUUP, GTOULO, GTOVUP, GTOVLO, GTOWUP, GTOWLO		t_{GTOSK}	—	5	ns	Figure 2.31

Downloaded from Arrow.com.

Table 2.23 I/O ports, POEG, GPT, AGT, and ADC12 trigger timing (2 of 2)

GPT32 Conditions:
High drive output is selected in the Port Drive Capability bit in the PmnPFS register.
AGT Conditions:
Middle drive output is selected in the Port Drive Capability bit in the PmnPFS register.

Parameter		Symbol	Min	Max	Unit	Test conditions
AGT	AGTIO, AGTEE input cycle	t_{ACYC} *2	100	—	ns	Figure 2.32
	AGTIO, AGTEE input high width, low width	t_{ACKWH}, t_{ACKWL}	40	—	ns	
	AGTIO, AGTO, AGTOA, AGTOB output cycle	t_{ACYC2}	62.5	—	ns	
ADC12	ADC12 trigger input pulse width	t_{TRGW}	1.5	—	t_{Pcyc}	Figure 2.33

Note: t_{Pcyc}: PCLKB cycle, t_{PDcyc}: PCLKD cycle.
Note 1. This skew applies when the same driver I/O is used. If the I/O of the middle and high drivers is mixed, operation is not guaranteed.
Note 2. Constraints on input cycle:
When not switching the source clock: $t_{Pcyc} \times 2 < t_{ACYC}$ should be satisfied.
When switching the source clock: $t_{Pcyc} \times 6 < t_{ACYC}$ should be satisfied.

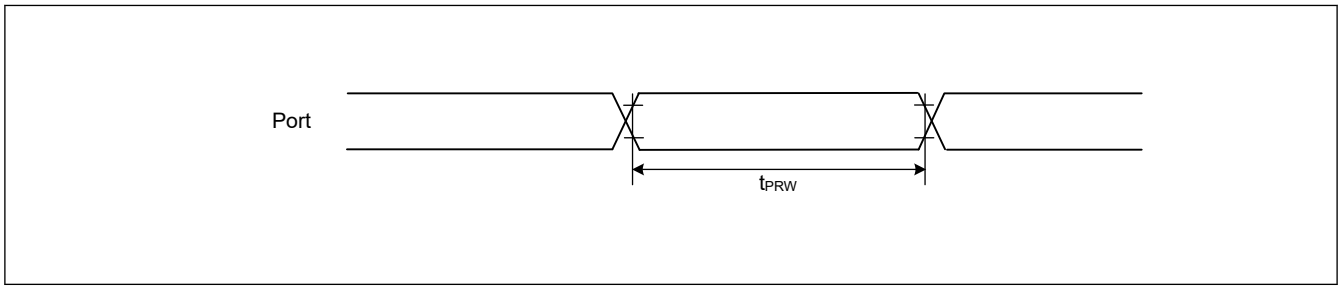

Figure 2.27 I/O ports input timing

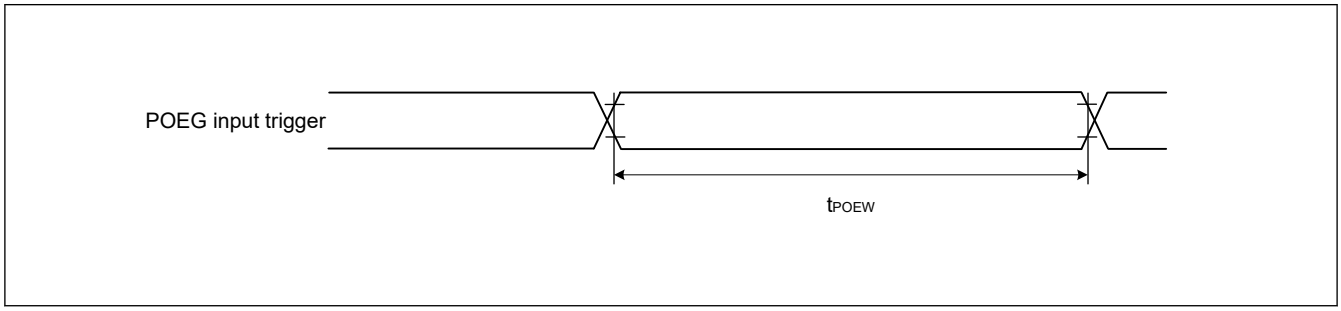

Figure 2.28 POEG input trigger timing

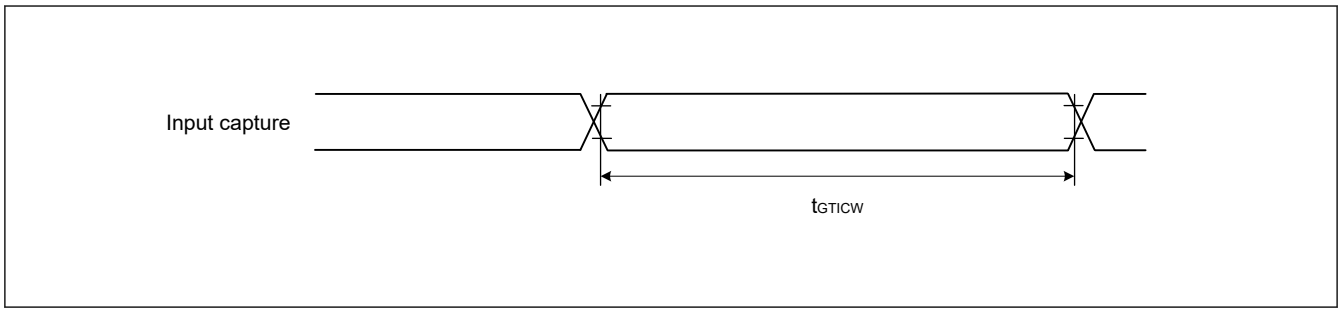

Figure 2.29 GPT input capture timing

Downloaded from Arrow.com.

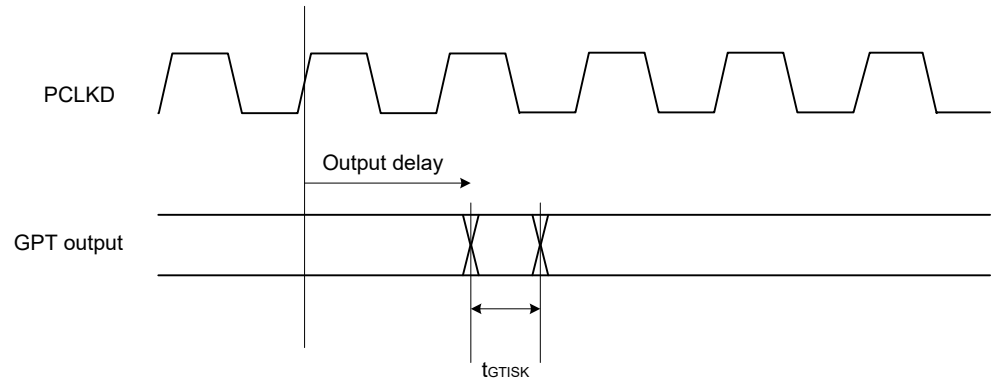

Figure 2.30 GPT output delay skew

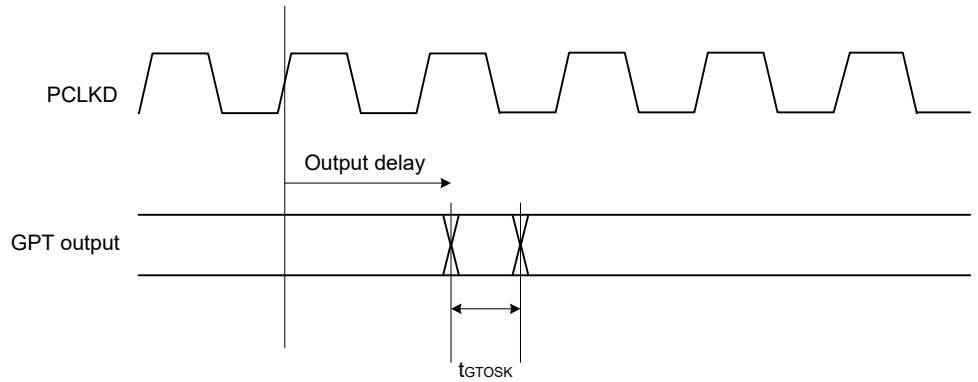

Figure 2.31 GPT output delay skew for OPS

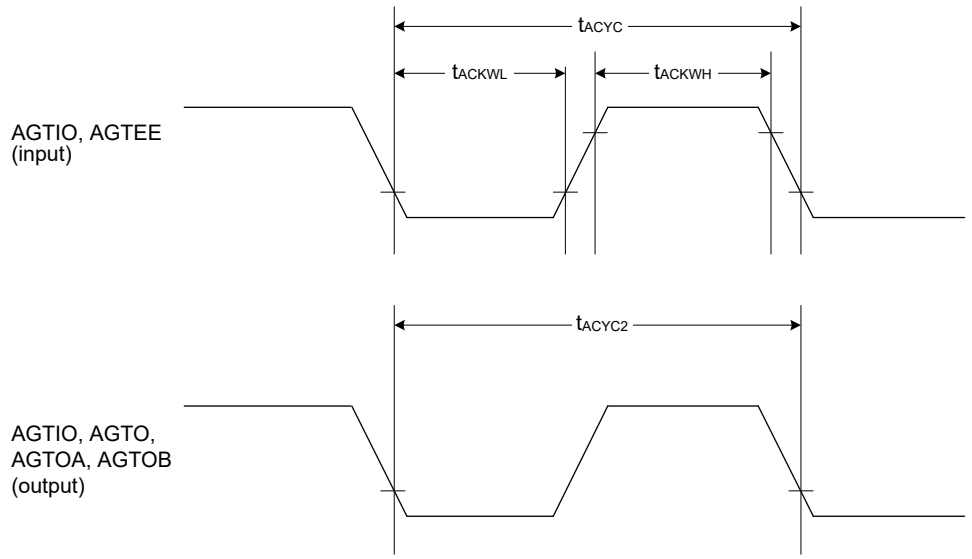

Figure 2.32 AGT input/output timing

Downloaded from Arrow.com.

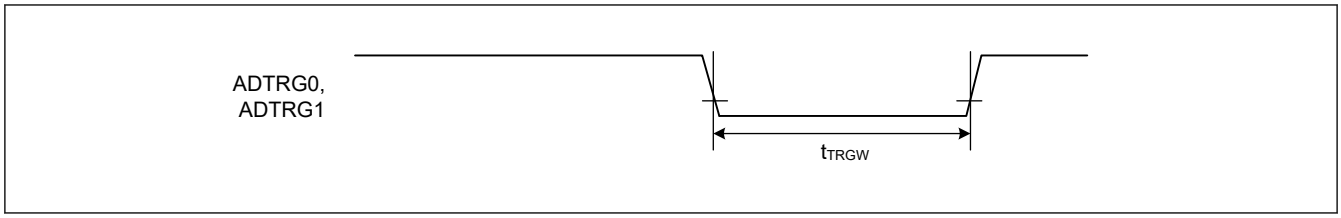

Figure 2.33 ADC12 trigger input timing

2.3.8 CAC Timing

Table 2.24 CAC timing

Parameter			Symbol	Min	Typ	Max	Unit	Test conditions
CAC	CACREF input pulse width	$t_{PBcyc} \leq t_{cac}$ *1	t_{CACREF}	$4.5 \times t_{cac} + 3 \times t_{PBcyc}$	—	—	ns	—
		$t_{PBcyc} > t_{cac}$ *1		$5 \times t_{cac} + 6.5 \times t_{PBcyc}$	—	—	ns	

Note: t_{PBcyc}: PCLKB cycle.
Note 1. t_{cac}: CAC count clock source cycle.

2.3.9 SCI Timing

Table 2.25 SCI timing (1)

Conditions: High drive output is selected in the Port Drive Capability bit in the PmnPFS register.

Parameter			Symbol	Min	Max	Unit	Test conditions
SCI	Input clock cycle	Asynchronous	t_{Scyc}	4	—	t_{Pcyc}	Figure 2.34
		Clock synchronous		6	—		
	Input clock pulse width		t_{SCKW}	0.4	0.6	t_{Scyc}	
	Input clock rise time		t_{SCKr}	—	5	ns	
	Input clock fall time		t_{SCKf}	—	5	ns	
	Output clock cycle	Asynchronous	t_{Scyc}	6 (other than SCI1, SCI2) 8 (SCI1, SCI2)	—	t_{Pcyc}	
		Clock synchronous		4	—		
	Output clock pulse width		t_{SCKW}	0.4	0.6	t_{Scyc}	
	Output clock rise time		t_{SCKr}	—	5	ns	
	Output clock fall time		t_{SCKf}	—	5	ns	
	Transmit data delay	Clock synchronous master mode (internal clock)	t_{TXD}	—	5	ns	Figure 2.35
		Clock synchronous slave mode (external clock)	t_{TXD}	—	25	ns	
	Receive data setup time	Clock synchronous master mode (internal clock)	t_{RXS}	15	—	ns	
		Clock synchronous slave mode (external clock)	t_{RXS}	5	—	ns	
	Receive data hold time	Clock synchronous	t_{RXH}	5	—	ns	

Note: t_{Pcyc}: PCLKA cycle.

Downloaded from Arrow.com.

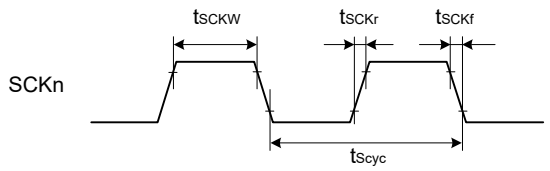

Note: n = 0 to 9

Figure 2.34 SCK clock input/output timing

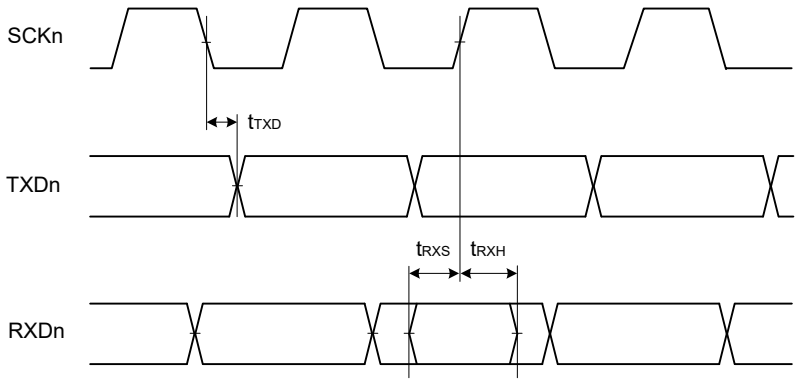

Note: n = 0 to 9

Figure 2.35 SCI input/output timing in clock synchronous mode

Downloaded from Arrow.com.

Table 2.26 SCI timing (2)

Conditions: High drive output is selected in the Port Drive Capability bit in the PmnPFS register.

Parameter			Symbol	Min	Max	Unit	Test conditions
Simple SPI	SCK clock cycle output (master)		t_{SPcyc}	4	65536	t_{Pcyc}	Figure 2.36
	SCK clock cycle input (slave)			6	65536		
	SCK clock high pulse width		t_{SPCKWH}	0.4	0.6	t_{SPcyc}	
	SCK clock low pulse width		t_{SPCKWL}	0.4	0.6	t_{SPcyc}	
	SCK clock rise and fall time		t_{SPCKr}, t_{SPCKf}	—	5	ns	
	Data input setup time	master	t_{SU}	15	—	ns	Figure 2.37 to Figure 2.40
		slave		5	—	ns	
	Data input hold time		t_H	5	—	ns	
	SS input setup time		t_{LEAD}	1	—	t_{SPcyc}	
	SS input hold time		t_{LAG}	1	—	t_{SPcyc}	
	Data output delay	master	t_{OD}	—	5	ns	
		slave		—	25	ns	
	Data output hold time		t_{OH}	-5	—	ns	
	Data rise and fall time		t_{Dr}, t_{Df}	—	5	ns	
	SS input rise and fall time		t_{SSLr}, t_{SSLf}	—	5	ns	
	Slave access time		t_{SA}	—	$3 \times t_{Pcyc} + 25$	ns	Figure 2.40
	Slave output release time		t_{REL}	—	$3 \times t_{Pcyc} + 25$	ns	

Note: t_{Pcyc}: PCLKA cycle.

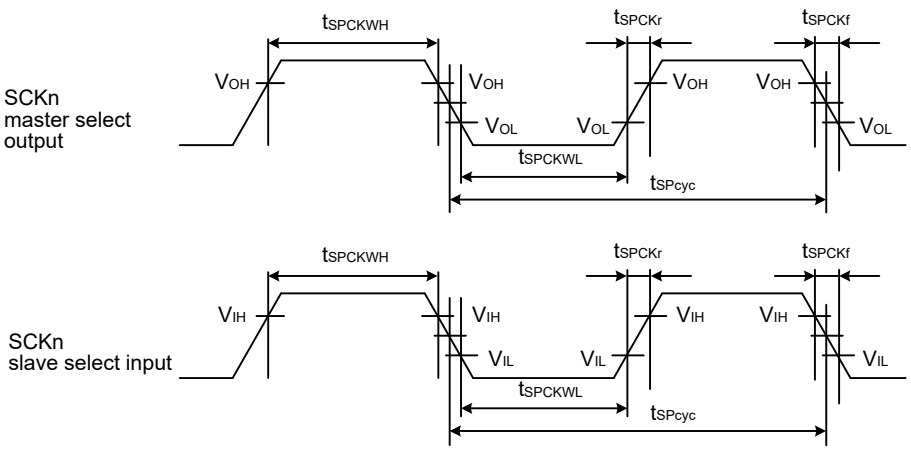

$V_{OH} = 0.7 \times VCC$, $V_{OL} = 0.3 \times VCC$, $V_{IH} = 0.7 \times VCC$, $V_{IL} = 0.3 \times VCC$

Note: n = 0 to 9

Figure 2.36 SCI simple SPI mode clock timing

Downloaded from Arrow.com.

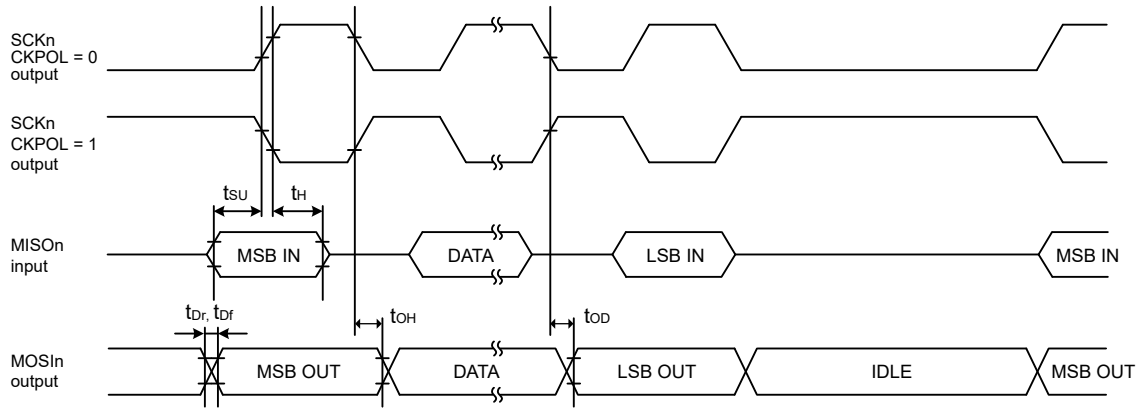

Note: n = 0 to 9

Figure 2.37 SCI simple SPI mode timing for master when CKPH = 1

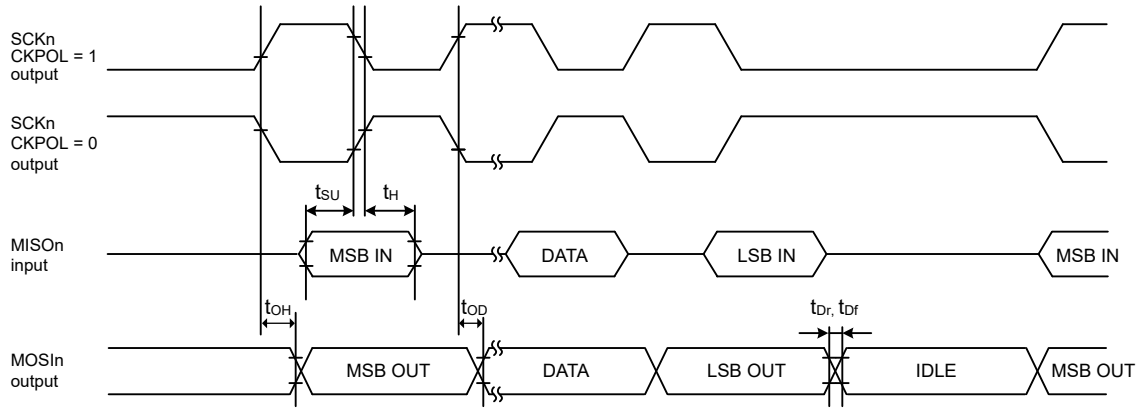

Note: n = 0 to 9

Figure 2.38 SCI simple SPI mode timing for master when CKPH = 0

Downloaded from Arrow.com.

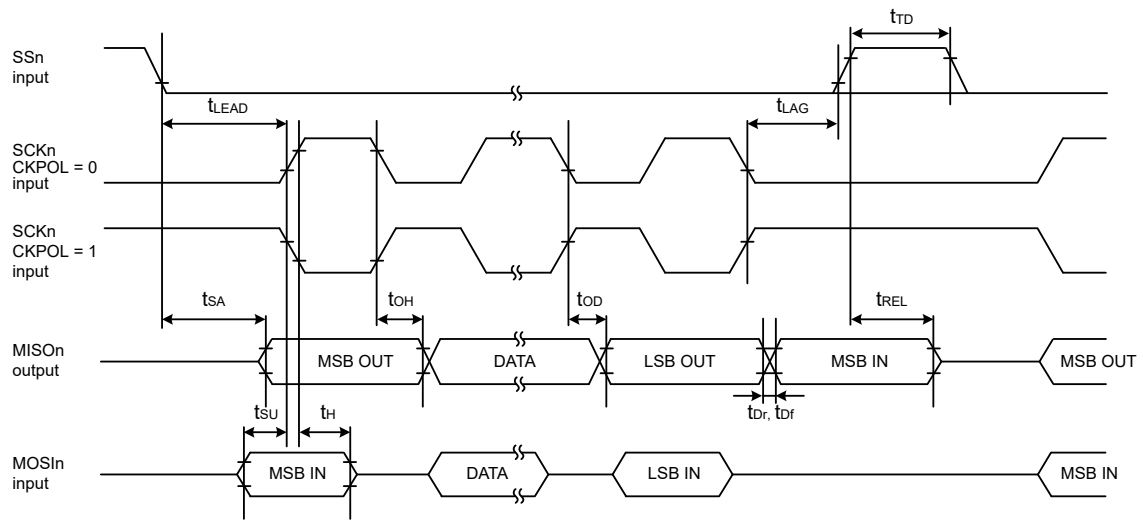

Note: n = 0 to 9

Figure 2.39 SCI simple SPI mode timing for slave when CKPH = 1

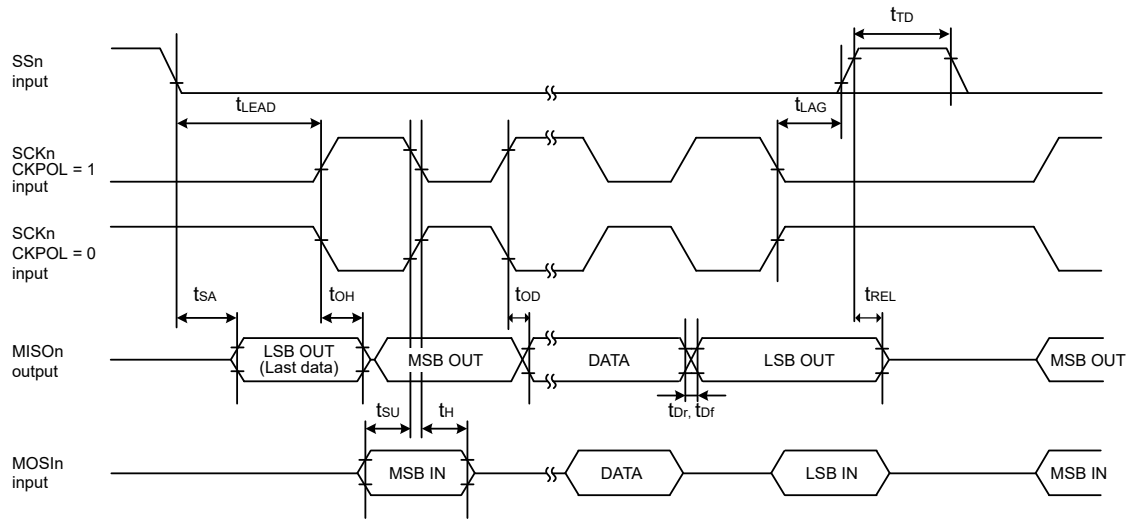

Note: n = 0 to 9

Figure 2.40 SCI simple SPI mode timing for slave when CKPH = 0

Downloaded from Arrow.com.

Table 2.27 SCI timing (3)

Conditions: Middle drive output is selected in the Port Drive Capability bit in the PmnPFS register.

Parameter		Symbol	Min	Max	Unit	Test conditions
Simple IIC (Standard mode)	SDA input rise time	t_{Sr}	—	1000	ns	Figure 2.41
	SDA input fall time	t_{Sf}	—	300	ns	
	SDA input spike pulse removal time	t_{SP}	0	4 × t_{IICcyc}	ns	
	Data input setup time	t_{SDAS}	250	—	ns	
	Data input hold time	t_{SDAH}	0	—	ns	
	SCL, SDA capacitive load	C_b *1	—	400	pF	
Simple IIC (Fast mode)	SDA input rise time	t_{Sr}	—	300	ns	Figure 2.41
	SDA input fall time	t_{Sf}	—	300	ns	
	SDA input spike pulse removal time	t_{SP}	0	4 × t_{IICcyc}	ns	
	Data input setup time	t_{SDAS}	100	—	ns	
	Data input hold time	t_{SDAH}	0	—	ns	
	SCL, SDA capacitive load	C_b *1	—	400	pF	

Note: t_{IICcyc}: IIC internal reference clock (IICφ) cycle.
Note 1. C_b indicates the total capacity of the bus line.

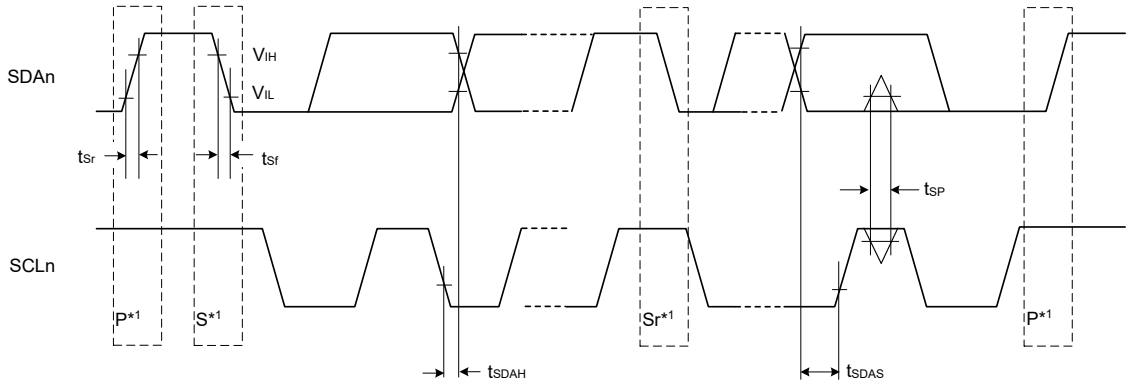

Test conditions:
V_{IH} = VCC × 0.7, V_{IL} = VCC × 0.3
V_{OL} = 0.6 V, I_{OL} = 6 mA

Note: n = 0 to 9
Note 1. S, P, and Sr indicate the following conditions:
S: Start condition
P: Stop condition
Sr: Restart condition

Figure 2.41 SCI simple IIC mode timing

Downloaded from Arrow.com.

2.3.10 SPI Timing

Table 2.28 SPI timing

Conditions: High drive output is selected in the Port Drive Capability bit in the PmnPFS register.

Parameter			Symbol	Min	Max	Unit	Test conditions
SPI	RSPCK clock cycle	Master	t_{SPcyc}	2	4096	t_{Pcyc}	Figure 2.42
		Slave		4	4096		
	RSPCK clock high pulse width	Master	t_{SPCKWH}	$(t_{SPcyc} - t_{SPCKr} - t_{SPCKf}) / 2 - 3$	—	ns	
		Slave		0.4	0.6	t_{SPcyc}	
	RSPCK clock low pulse width	Master	t_{SPCKWL}	$(t_{SPcyc} - t_{SPCKr} - t_{SPCKf}) / 2 - 3$	—	ns	
		Slave		0.4	0.6	t_{SPcyc}	
	RSPCK clock rise and fall time	Master	t_{SPCKr}, t_{SPCKf}	—	5	ns	
		Slave		—	1	μs	
	Data input setup time	Master	t_{SU}	4	—	ns	Figure 2.43 to Figure 2.48
		Slave		5	—		
	Data input hold time	Master (PCLKA division ratio set to 1/2)	t_{HF}	0	—	ns	
		Master (PCLKA division ratio set to a value other than 1/2)	t_H	t_{Pcyc}	—		
		Slave	t_H	20	—		
	SSL setup time	Master	t_{LEAD}	$N \times t_{SPcyc} - 10$ *1	$N \times t_{SPcyc} + 100$ *1	ns	
		Slave		$4 \times t_{Pcyc}$	—	ns	
	SSL hold time	Master	t_{LAG}	$N \times t_{SPcyc} - 10$ *2	$N \times t_{SPcyc} + 100$ *2	ns	
		Slave		$4 \times t_{Pcyc}$	—	ns	
	Data output delay	Master	t_{OD1}	—	6.3	ns	
			t_{OD2}		6.3		
		Slave	t_{OD}	—	20		
	Data output hold time	Master	t_{OH}	0	—	ns	
		Slave		0	—		
	Successive transmission delay	Master	t_{TD}	$t_{SPcyc} + 2 \times t_{Pcyc}$	$8 \times t_{SPcyc} + 2 \times t_{Pcyc}$	ns	
		Slave		$4 \times t_{Pcyc}$			
	MOSI and MISO rise and fall time	Output	t_{Dr}, t_{Df}	—	5	ns	
		Input		—	1	μs	
	SSL rise and fall time	Output	t_{SSLr}, t_{SSLf}	—	5	ns	
		Input		—	1	μs	
	Slave access time		t_{SA}	—	25	ns	Figure 2.47 and Figure 2.48
	Slave output release time		t_{REL}	—	25		

Note: t_{Pcyc}: PCLKA cycle.

Downloaded from Arrow.com.

Note: Must use pins that have a letter appended to their name, for instance _A, _B, to indicate group membership. For the SPI interface, the AC portion of the electrical characteristics is measured for each group.
Note 1. N is set to an integer from 1 to 8 by the SPCKD register.
Note 2. N is set to an integer from 1 to 8 by the SSLND register.

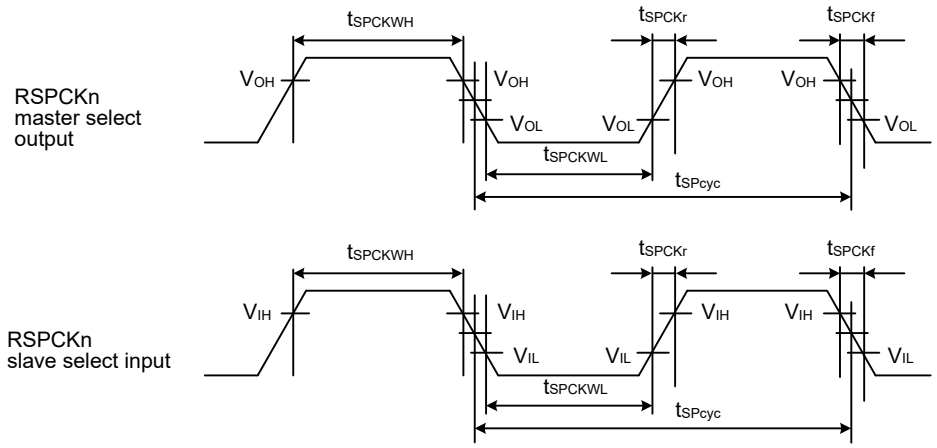

V_{OH} = 0.7 × VCC, V_{OL} = 0.3 × VCC, V_{IH} = 0.7 × VCC, V_{IL} = 0.3 × VCC

Note: n = A or B

Figure 2.42 SPI clock timing

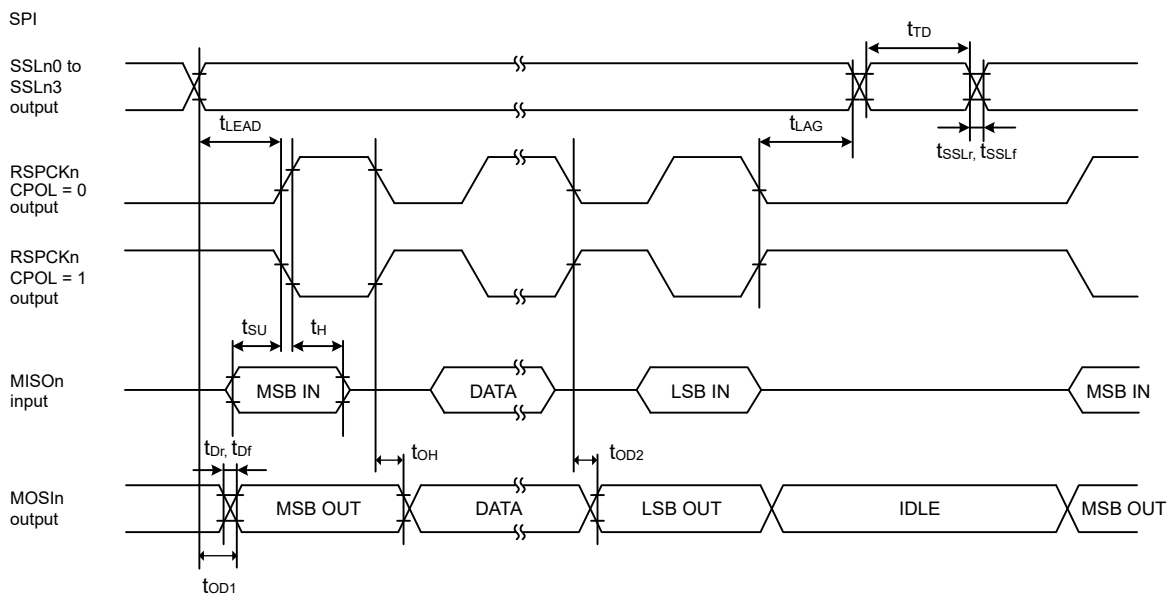

Note: n = A or B

Figure 2.43 SPI timing for master when CPHA = 0

Downloaded from Arrow.com.

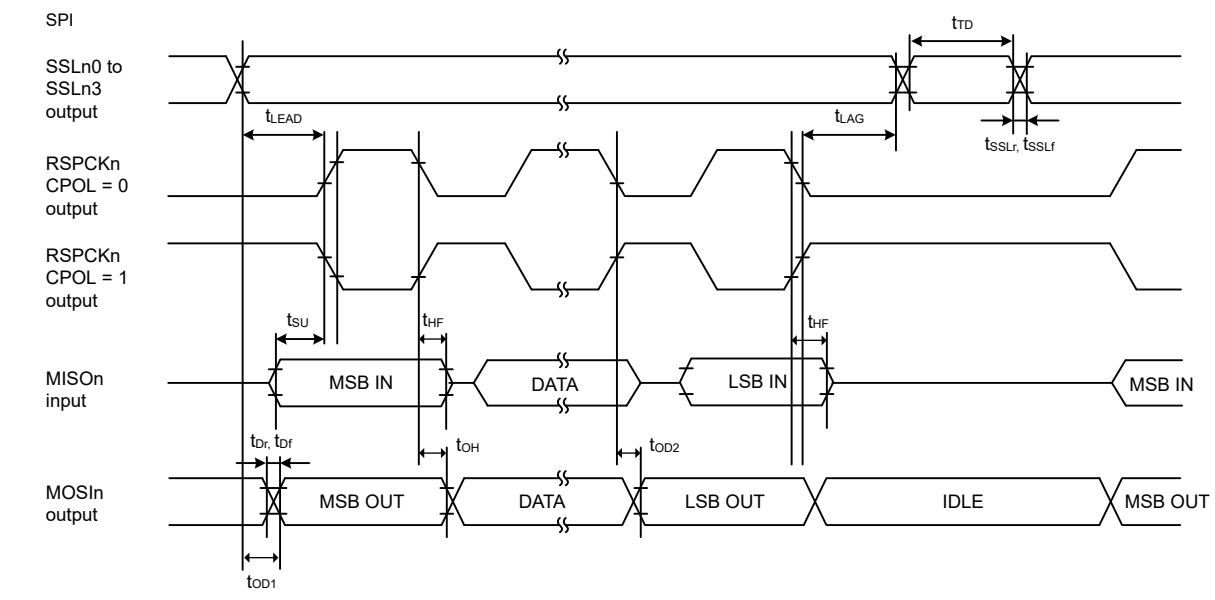

Note: n = A or B

Figure 2.44 SPI timing for master when CPHA = 0 and the bit rate is set to PCLKA/2

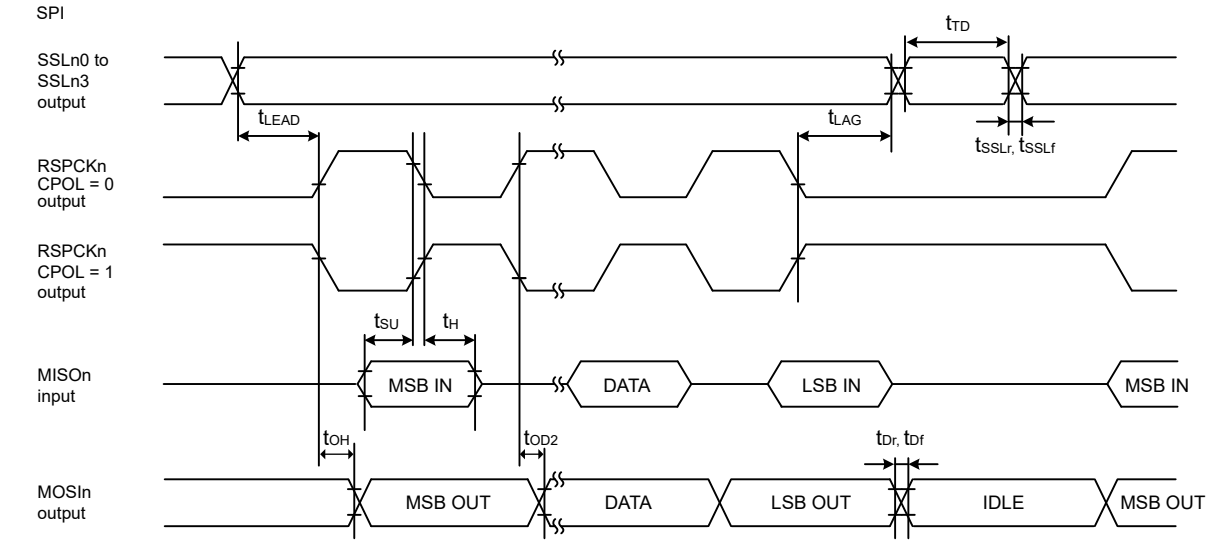

Note: n = A or B

Figure 2.45 SPI timing for master when CPHA = 1

Downloaded from Arrow.com.

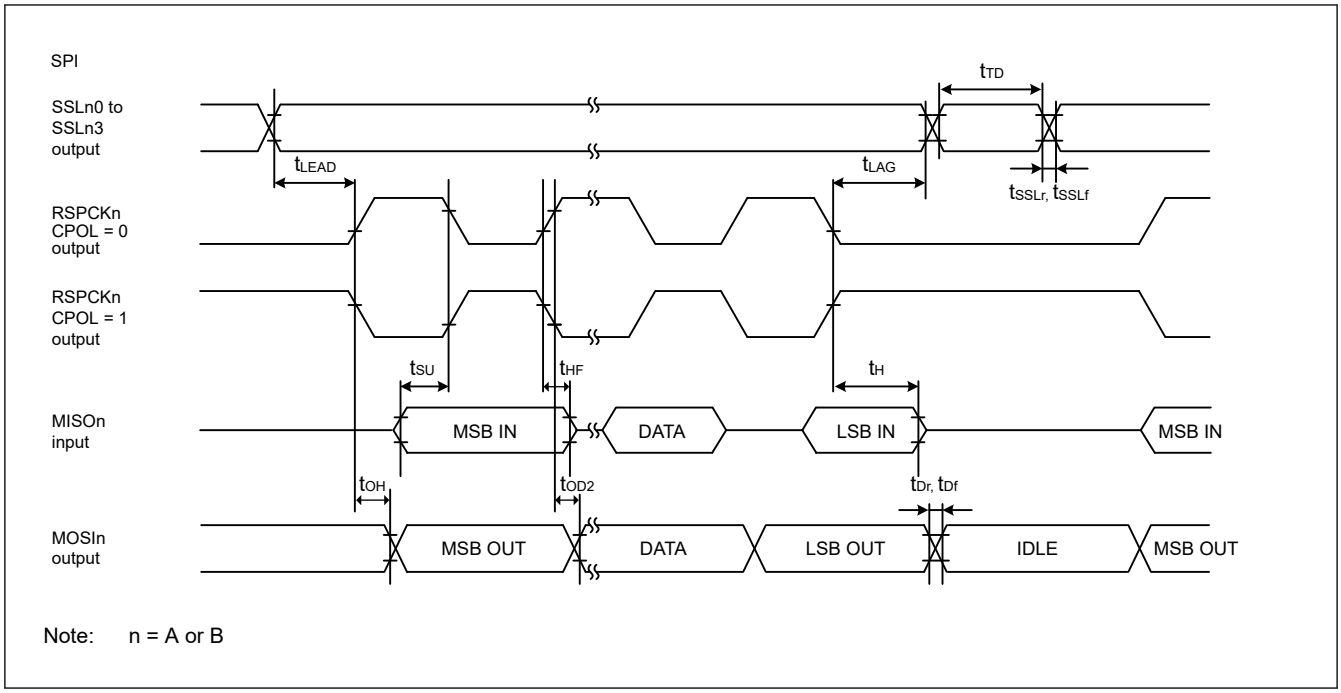

Figure 2.46 SPI timing for master when CPHA = 1 and the bit rate is set to PCLKA/2

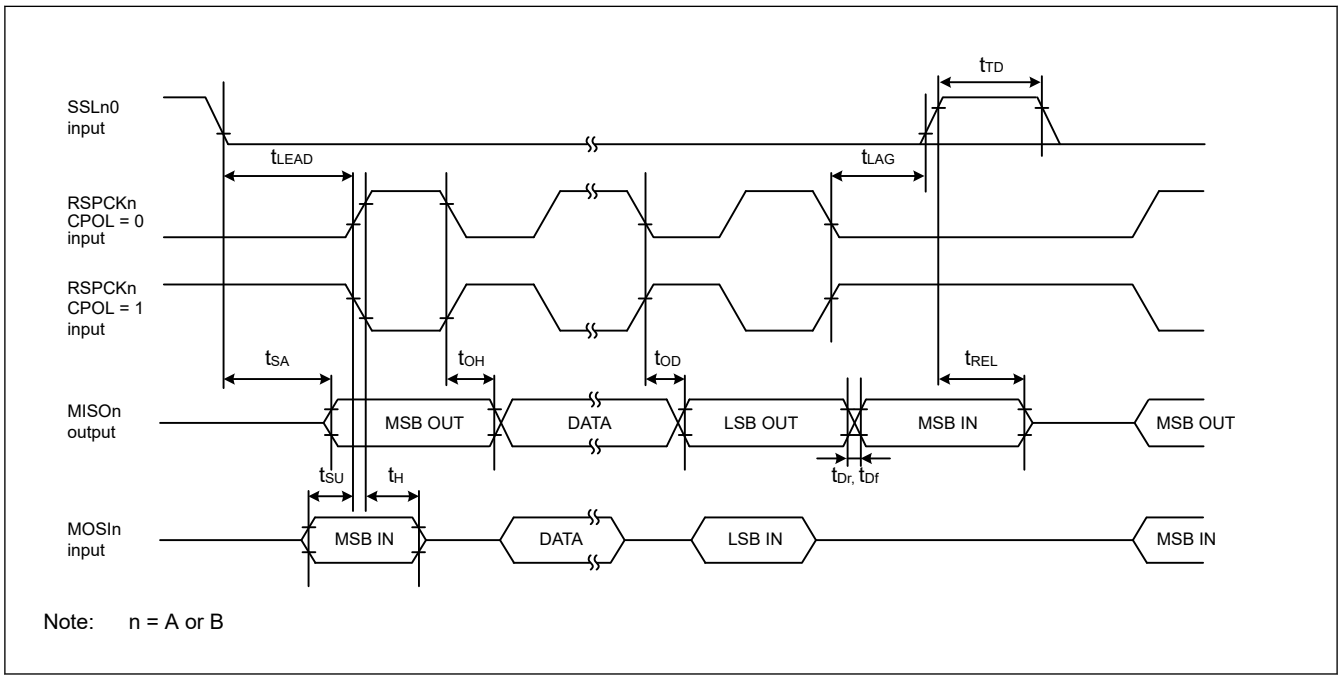

Figure 2.47 SPI timing for slave when CPHA = 0

Downloaded from Arrow.com.

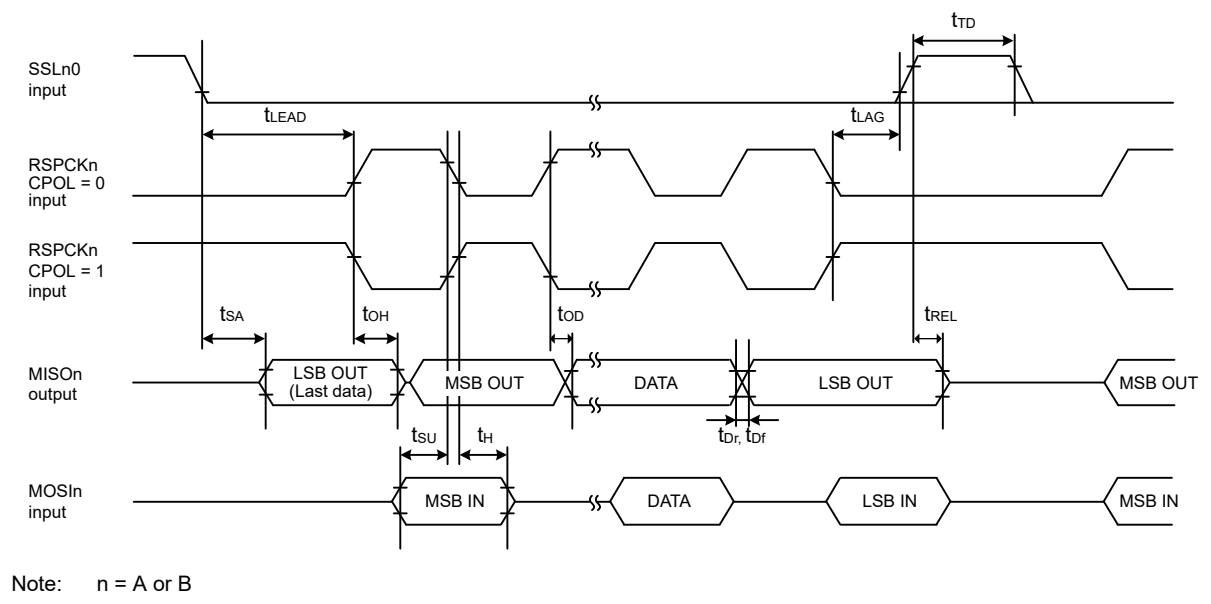

Note: n = A or B

Figure 2.48 SPI timing for slave when CPHA = 1

2.3.11 QSPI Timing

Table 2.29 QSPI timing

Conditions: High drive output is selected in the Port Drive Capability bit in the PmnPFS register.

Parameter		Symbol	Min	Max	Unit	Test conditions
QSPI	QSPCK clock cycle	t_{QScyc}	2	48	t_{Pcyc}	Figure 2.49
	QSPCK clock high pulse width	t_{QSWH}	t_{QScyc} × 0.4	—	ns	
	QSPCK clock low pulse width	t_{QSWL}	t_{QScyc} × 0.4	—	ns	
	Data input setup time	t_{Su}	10	—	ns	Figure 2.50
	Data input hold time	t_{IH}	0	—	ns	
	QSSL setup time	t_{LEAD}	(N + 0.5) × t_{Qscyc} - 5*1	(N + 0.5) × t_{Qscyc} + 100*1	ns	
	QSSL hold time	t_{LAG}	(N + 0.5) × t_{Qscyc} - 5*2	(N + 0.5) × t_{Qscyc} + 100*2	ns	
	Data output delay	t_{OD}	—	4	ns	
	Data output hold time	t_{OH}	–3.3	—	ns	
	Successive transmission delay	t_{TD}	1	16	t_{QScyc}	

Note: t_{Pcyc}: PCLKA cycle.
Note 1. N is set to 0 or 1 in SFMSLD.
Note 2. N is set to 0 or 1 in SFMSHD.

Downloaded from Arrow.com.

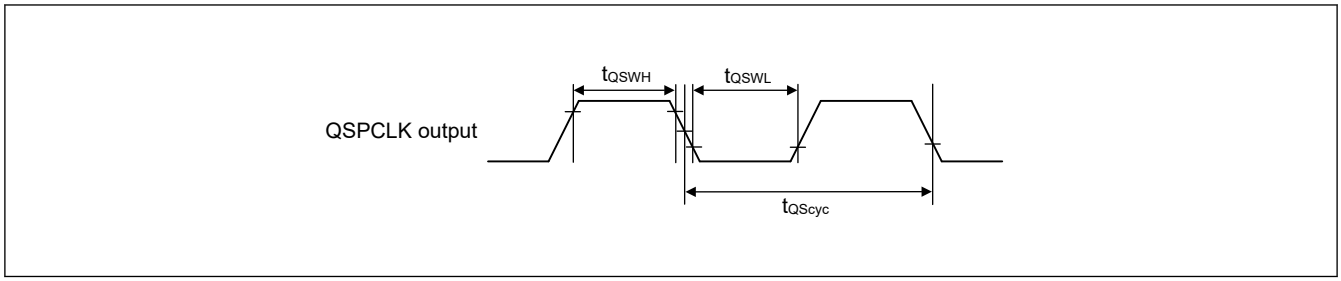

Figure 2.49 QSPI clock timing

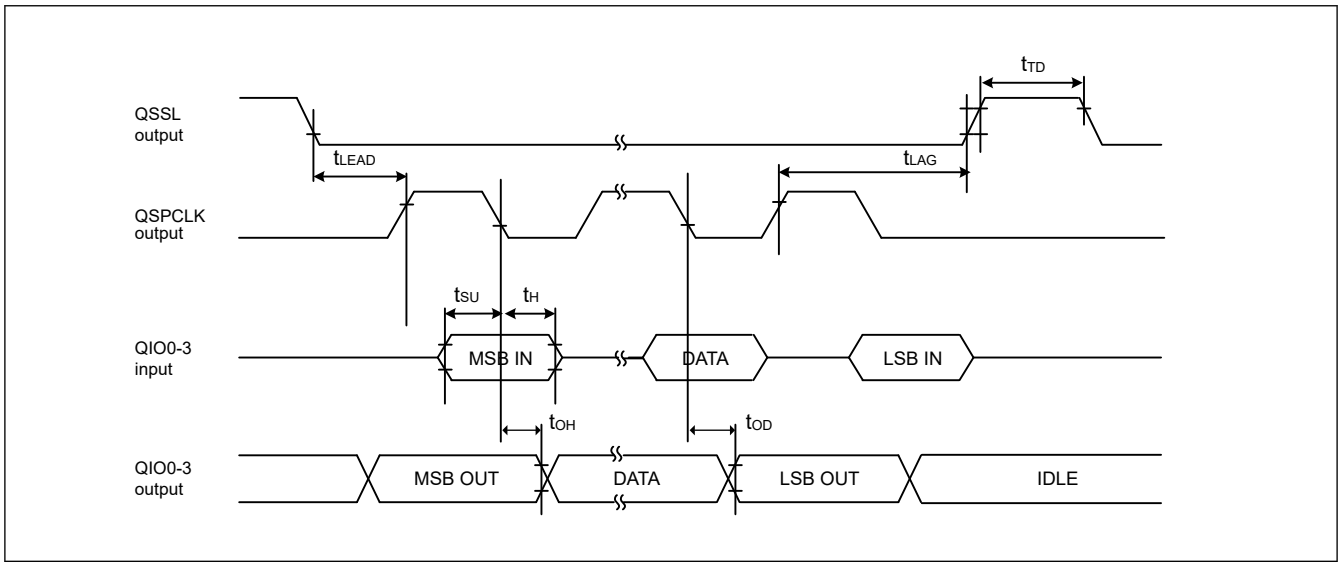

Figure 2.50 Transmit and receive timing

2.3.12 OSPI Timing

Table 2.30 OSPI timing (1 of 2)

(1) Conditions: High speed high drive output is selected in the port drive capability bit in the PmnPFS register for the following pins: OM_SCLK, OM_DQS, OM_SIO0-7.
(2) Conditions: Middle drive output is selected in the port drive capability bit in the PmnPFS register for the following pins: OM_CS0, OM_CS1.

Parameter		Symbol	Min	Max	Unit	Test conditions
OM_SCLK clock frequency	SPI	f_{OCcyc}	—	50	MHz	Figure 2.51
	SOPI/DOPI	f_{OCcyc}	—	100	MHz	
OM_SCLK high pulse width		t_{OCwh}	0.475	0.525	t_{OCcyc}	
OM_SCLK low pulse width		t_{OCwl}	0.475	0.525	t_{OCcyc}	
OM_SCLK rise time		t_{OCr}	—	1.8	ns	
OM_SCLK fall time		t_{OCf}	—	1.8	ns	
OM_CS setup time	SPI/SOPI	t_{OCLEAD}	1.5 × t_{OCcyc} – 10.4 (Minimum register settings)	2.5 × t_{OCcyc} + 6.9 (Maximum register settings)	ns	Figure 2.52, Figure 2.53
	DOPI	t_{OCLEAD}	1.25 × t_{OCcyc} – 7.9 (Minimum register settings)	2.25 × t_{OCcyc} + 4.4 (Maximum register settings)	ns	Figure 2.54
OM_CS hold time	SPI/SOPI	t_{OCLAG}	1 × t_{OCcyc} – 6.9 (Minimum register settings)	4.5 × t_{OCcyc} + 10.4 (Maximum register settings)	ns	Figure 2.52, Figure 2.53
	DOPI read	t_{OCLAG}	3.25 × t_{OCcyc} – 4.4 (Minimum register settings)	4.25 × t_{OCcyc} + 7.9 (Maximum register settings)	ns	Figure 2.54
	DOPI write	t_{OCLAG}	0.75 × t_{OCcyc} – 4.4 (Minimum register settings)	4.25 × t_{OCcyc} + 7.9 (Maximum register settings)	ns	

Downloaded from Arrow.com.

Table 2.30 OSPI timing (2 of 2)

(1) Conditions: High speed high drive output is selected in the port drive capability bit in the PmnPFS register for the following pins: OM_SCLK, OM_DQS, OM_SIO0-7.
(2) Conditions: Middle drive output is selected in the port drive capability bit in the PmnPFS register for the following pins: OM_CS0, OM_CS1.

Parameter		Symbol	Min	Max	Unit	Test conditions
Continuous transfer delay time		t_{OCTD}	1 × t_{OCcyc} – 1 (Minimum register settings)	8.5 × t_{OCcyc} + 1 (Maximum register settings)	ns	Figure 2.52, Figure 2.53, Figure 2.54
Data input setup time	SPI SCLK base point	t_{SU}	10.5	—	ns	Figure 2.52
Data input hold time		t_H	0.5	—	ns	
Data input setup time	SOPI/DOPI DQS base point*1	t_{SU}	-1.3	—	ns	Figure 2.53, Figure 2.54
Data input hold time		t_H	3.25	—	ns	
Skew of clock to data strobe		t_{CKDS}	—	20	ns	
Data output delay time	SPI/SOPI	t_{OD}	—	2.65	ns	Figure 2.52, Figure 2.53
Data output hold time		t_{OH}	-2.65	—	ns	
Data output buffer off time	SOPI	t_{BOFF}	2.1	—	ns	Figure 2.53
Data output delay time	DOPI*1	t_{OD}	—	3.65	ns	Figure 2.54, Figure 2.55
Data output hold time		t_{OH}	1.1	—	ns	
Data output buffer off time	DOPI	t_{BOFF}	1.1	—	ns	Figure 2.54
DQS refresh input setup time		t_{DQSS}	20	—	ns	Figure 2.56
DQS refresh input hold time		t_{DQSH}	0.5 × tOCcyc	—	ns	

Note: t_{OCcyc} indicates the OM_SCLK cycle.
Note 1. OM_SCLK frequency: 100 MHz

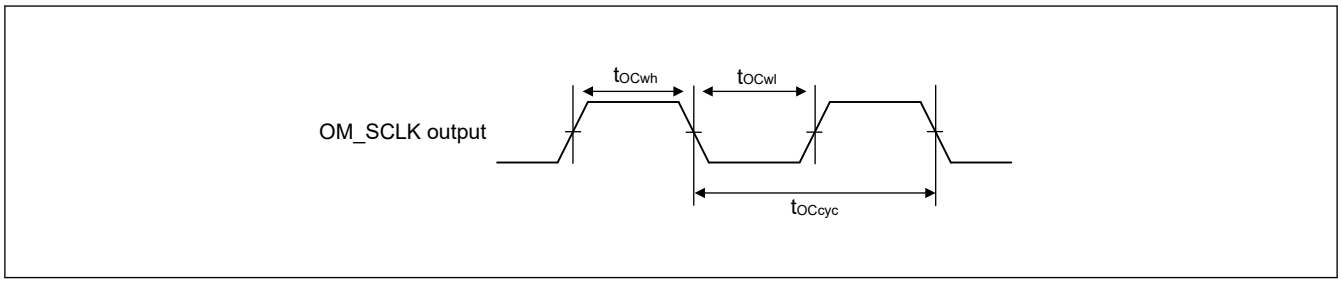

Figure 2.51 Clock timing

Downloaded from Arrow.com.

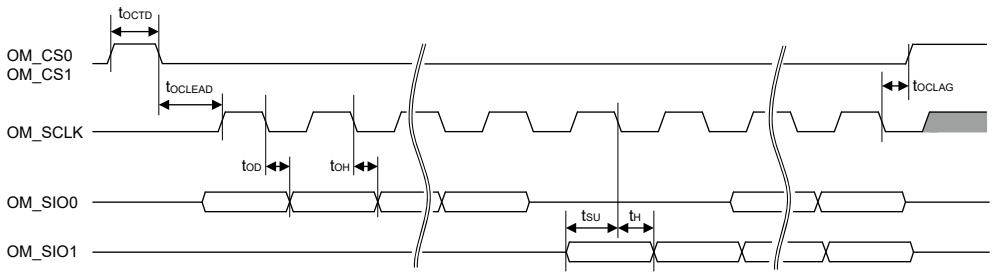

Figure 2.52 SPI transfer format transmission and reception timing

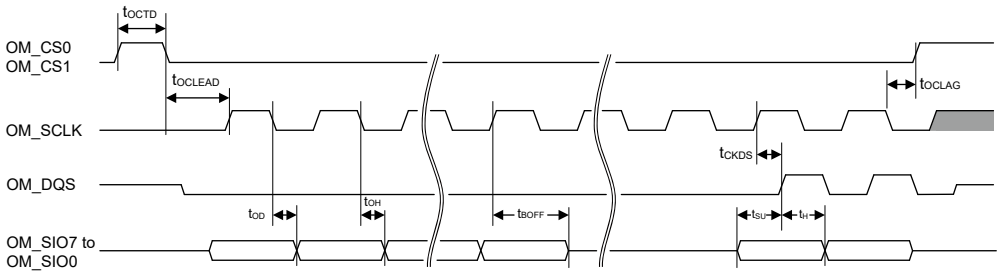

Figure 2.53 SOPI transfer format transmission and reception timing

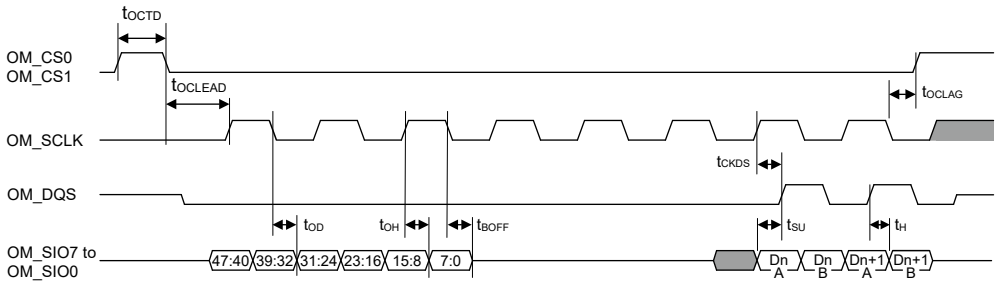

Figure 2.54 DOPI transfer format transmission and reception timing

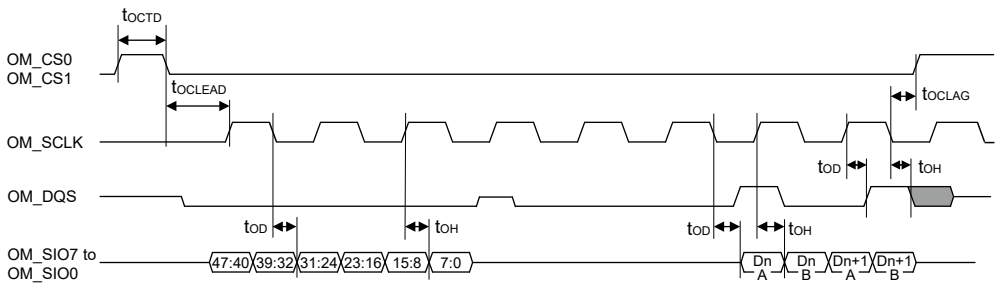

Figure 2.55 DOPI transfer format transmission timing

Downloaded from Arrow.com.

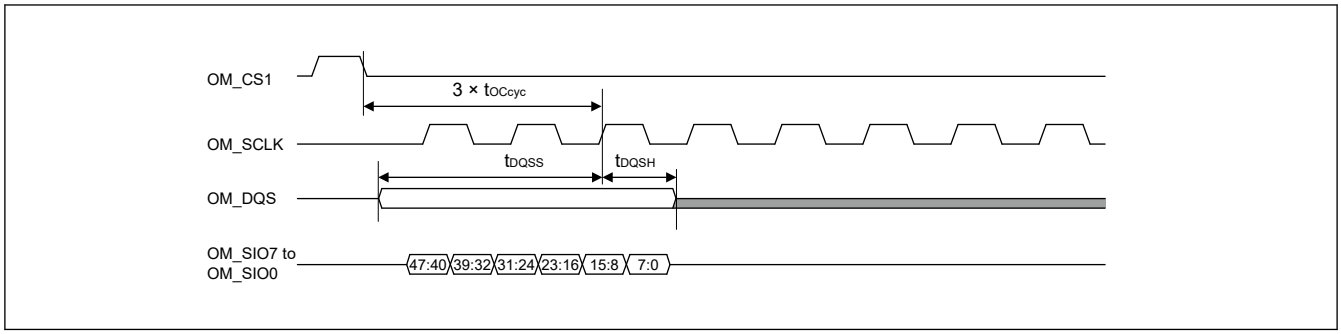

Figure 2.56 DQS refresh input timing (OctaRAM™ read/write)

2.3.13 IIC Timing

Table 2.31 IIC timing (1) (1 of 2)

(1) Conditions: Middle drive output is selected in the Port Drive Capability bit in the PmnPFS register for the following pins: SDA0_B, SCL0_B, SDA1_B, SCL1_B.
(2) The following pins do not require setting: SCL0_A, SDA0_A, SCL1_A, SDA1_A.
(3) Use pins that have a letter appended to their names, for instance "_A" or "_B", to indicate group membership. For the IIC interface, the AC portion of the electrical characteristics is measured for each group.

Parameter		Symbol	Min	Max	Unit	Test conditions
IIC (Standard mode, SMBus) ICFER.FMPE = 0	SCL input cycle time	t_{SCL}	6 (12) × t_{IICcyc} + 1300	—	ns	Figure 2.57
	SCL input high pulse width	t_{SCLH}	3 (6) × t_{IICcyc} + 300	—	ns	
	SCL input low pulse width	t_{SCLL}	3 (6) × t_{IICcyc} + 300	—	ns	
	SCL, SDA rise time	t_{Sr}	—	1000	ns	
	SCL, SDA fall time	t_{Sf}	—	300	ns	
	SCL, SDA input spike pulse removal time	t_{SP}	0	1 (4) × t_{IICcyc}	ns	
	SDA input bus free time when wakeup function is disabled	t_{BUF}	3 (6) × t_{IICcyc} + 300	—	ns	
	SDA input bus free time when wakeup function is enabled	t_{BUF}	3 (6) × t_{IICcyc} + 4 × t_{Pcyc} + 300	—	ns	
	START condition input hold time when wakeup function is disabled	t_{STAH}	t_{IICcyc} + 300	—	ns	
	START condition input hold time when wakeup function is enabled	t_{STAH}	1 (5) × t_{IICcyc} + t_{Pcyc} + 300	—	ns	
	Repeated START condition input setup time	t_{STAS}	1000	—	ns	
	STOP condition input setup time	t_{STOS}	1000	—	ns	
	Data input setup time	t_{SDAS}	t_{IICcyc} + 50	—	ns	
	Data input hold time	t_{SDAH}	0	—	ns	
	SCL, SDA capacitive load	C_b	—	400	pF	

Downloaded from Arrow.com.

Table 2.31 IIC timing (1) (2 of 2)

(1) Conditions: Middle drive output is selected in the Port Drive Capability bit in the PmnPFS register for the following pins: SDA0_B, SCL0_B, SDA1_B, SCL1_B.
(2) The following pins do not require setting: SCL0_A, SDA0_A, SCL1_A, SDA1_A.
(3) Use pins that have a letter appended to their names, for instance "_A" or "_B", to indicate group membership. For the IIC interface, the AC portion of the electrical characteristics is measured for each group.

Parameter		Symbol	Min	Max	Unit	Test conditions
IIC (Fast mode)	SCL input cycle time	t_{SCL}	6 (12) × t_{IICcyc} + 600	—	ns	Figure 2.57
	SCL input high pulse width	t_{SCLH}	3 (6) × t_{IICcyc} + 300	—	ns	
	SCL input low pulse width	t_{SCLL}	3 (6) × t_{IICcyc} + 300	—	ns	
	SCL, SDA rise time	t_{Sr}	20 × (external pullup voltage/5.5V)*1	300	ns	
	SCL, SDA fall time	t_{Sf}	20 × (external pullup voltage/5.5V)*1	300	ns	
	SCL, SDA input spike pulse removal time	t_{SP}	0	1 (4) × t_{IICcyc}	ns	
	SDA input bus free time when wakeup function is disabled	t_{BUF}	3 (6) × t_{IICcyc} + 300	—	ns	
	SDA input bus free time when wakeup function is enabled	t_{BUF}	3 (6) × t_{IICcyc} + 4 × t_{Pcyc} + 300	—	ns	
	START condition input hold time when wakeup function is disabled	t_{STAH}	t_{IICcyc} + 300	—	ns	
	START condition input hold time when wakeup function is enabled	t_{STAH}	1 (5) × t_{IICcyc} + t_{Pcyc} + 300	—	ns	
	Repeated START condition input setup time	t_{STAS}	300	—	ns	
	STOP condition input setup time	t_{STOS}	300	—	ns	
	Data input setup time	t_{SDAS}	t_{IICcyc} + 50	—	ns	
	Data input hold time	t_{SDAH}	0	—	ns	
	SCL, SDA capacitive load	C_b	—	400	pF	

Note: t_{IICcyc}: IIC internal reference clock (IICφ) cycle, t_{Pcyc}: PCLKB cycle.
Note: Values in parentheses apply when ICMR3.NF[1:0] is set to 11b while the digital filter is enabled with ICFER.NFE set to 1.
Note: Must use pins that have a letter appended to their name, for instance "_A", "_B", to indicate group membership. For the IIC interface, the AC portion of the electrical characteristics is measured for each group.
Note 1. Only supported for SCL0_A, SDA0_A, SCL1_A, and SDA1_A.

Downloaded from Arrow.com.

Table 2.32 IIC timing (2)

Setting of the SCL0_A, SDA0_A pins is not required with the Port Drive Capability bit in the PmnPFS register.

Parameter		Symbol	Min	Max	Unit	Test conditions
IIC (Fast-mode+) ICFER.FMPE = 1	SCL input cycle time	t_{SCL}	6 (12) × t_{IICcyc} + 240	—	ns	Figure 2.57
	SCL input high pulse width	t_{SCLH}	3 (6) × t_{IICcyc} + 120	—	ns	
	SCL input low pulse width	t_{SCLL}	3 (6) × t_{IICcyc} + 120	—	ns	
	SCL, SDA rise time	t_{Sr}	—	120	ns	
	SCL, SDA fall time	t_{Sf}	20 × (external pullup voltage/ 5.5V)	120	ns	
	SCL, SDA input spike pulse removal time	t_{SP}	0	1 (4) × tIICcyc	ns	
	SDA input bus free time when wakeup function is disabled	t_{BUF}	3 (6) × t_{IICcyc} + 120	—	ns	
	SDA input bus free time when wakeup function is enabled	t_{BUF}	3 (6) × t_{IICcyc} + 4 × t_{Pcyc} + 120	—	ns	
	Start condition input hold time when wakeup function is disabled	t_{STAH}	t_{IICcyc} + 120	—	ns	
	START condition input hold time when wakeup function is enabled	t_{STAH}	1 (5) × t_{IICcyc} + t_{Pcyc} + 120	—	ns	
	Restart condition input setup time	t_{STAS}	120	—	ns	
	Stop condition input setup time	t_{STOS}	120	—	ns	
	Data input setup time	t_{SDAS}	t_{IICcyc} + 30	—	ns	
	Data input hold time	t_{SDAH}	0	—	ns	
	SCL, SDA capacitive load	C_b *1	—	550	pF	

Note: t_{IICcyc}: IIC internal reference clock (IICφ) cycle, t_{Pcyc}: PCLKB cycle.
Note: Values in parentheses apply when ICMR3.NF[1:0] is set to 11b while the digital filter is enabled with ICFER.NFE set to 1.
Note 1. Cb indicates the total capacity of the bus line.

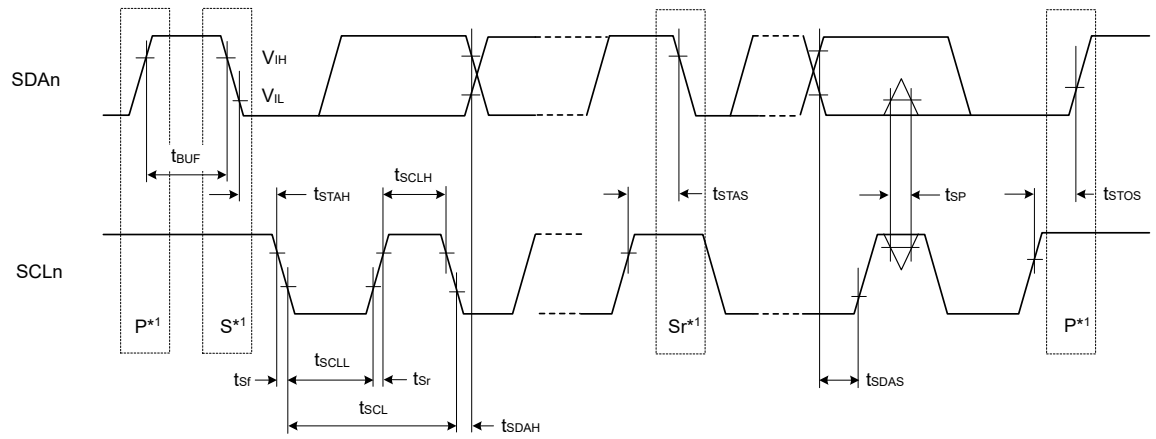

Note 1. S, P, and Sr indicate the following conditions:
S: Start condition
P: Stop condition
Sr: Restart condition

Figure 2.57 I²C bus interface input/output timing

Downloaded from Arrow.com.

2.3.14 SSIE Timing

Table 2.33 SSIE timing

(1) High drive output is selected with the Port Drive Capability bit in the PmnPFS register.
(2) Use pins that have a letter appended to their names, for instance "_A", "_B", or "_C" to indicate group membership. For the SSIE interface, the AC portion of the electrical characteristics is measured for each group.

Parameter			Symbol	Target specification		Unit	Comments
				Min.	Max.		
SSIBCK0	Cycle	Master	t_O	80	—	ns	Figure 2.58
		Slave	t_I	80	—	ns	
	High level/low level	Master	t_{HC}/t_{LC}	0.35	—	t_O	
		Slave		0.35	—	t_I	
	Rising time/ falling time	Master	t_{RC}/t_{FC}	—	0.15	t_O / t_I	
		Slave		—	0.15	t_O / t_I	
SSILRCK0/ SSIFS0, SSITXD0, SSIRXD0, SSIDATA0	Input set up time	Master	t_{SR}	12	—	ns	Figure 2.60, Figure 2.61
		Slave		12	—	ns	
	Input hold time	Master	t_{HR}	8	—	ns	
		Slave		15	—	ns	
	Output delay time	Master	t_{DTR}	-10	5	ns	
		Slave		0	20	ns	Figure 2.60, Figure 2.61
	Output delay time from SSILRCK0/ SSIFS0 change	Slave	t_{DTRW}	—	20	ns	Figure 2.62*1
GTIOC2A, AUDIO_CLK	Cycle		t_{EXcyc}	20	—	ns	Figure 2.59
	High level/low level		t_{EXL}/t_{EXH}	0.4	0.6	t_{EXcyc}	

Note 1. For slave-mode transmission, SSIE has a path, through which the signal input from the SSILRCK0/SSIFS0 pin is used to generate transmit data, and the transmit data is logically output to the SSITXD0 or SSIDATA0 pin.

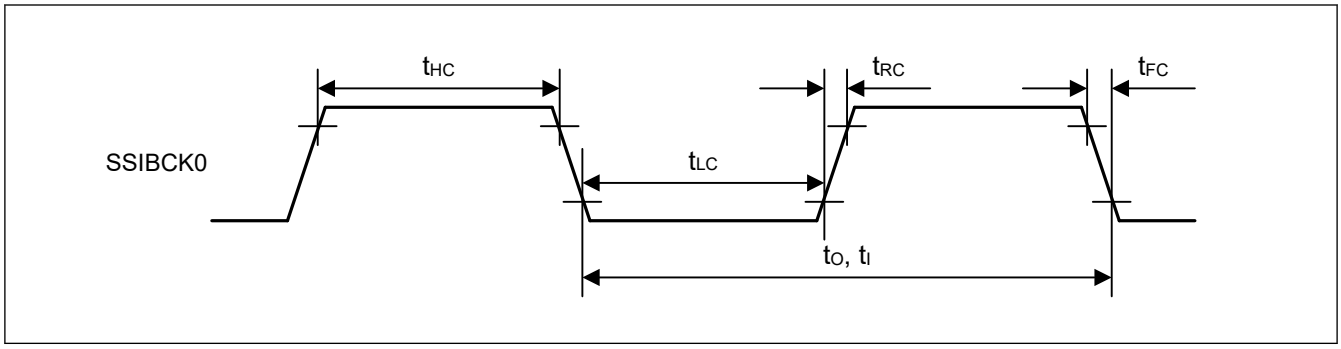

Figure 2.58 SSIE clock input/output timing

Downloaded from Arrow.com.

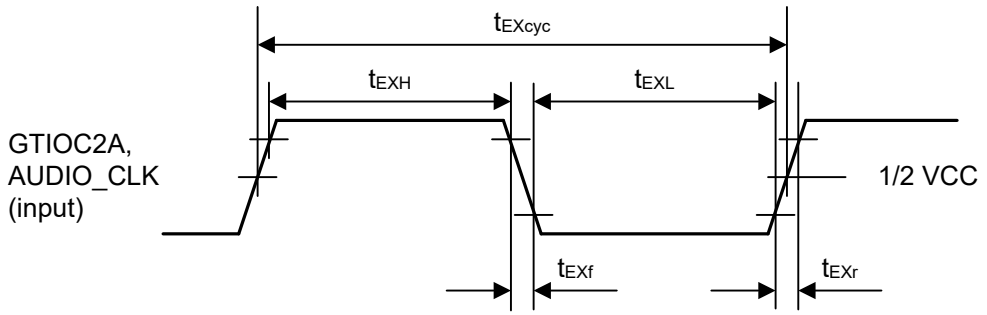

Figure 2.59 Clock input timing

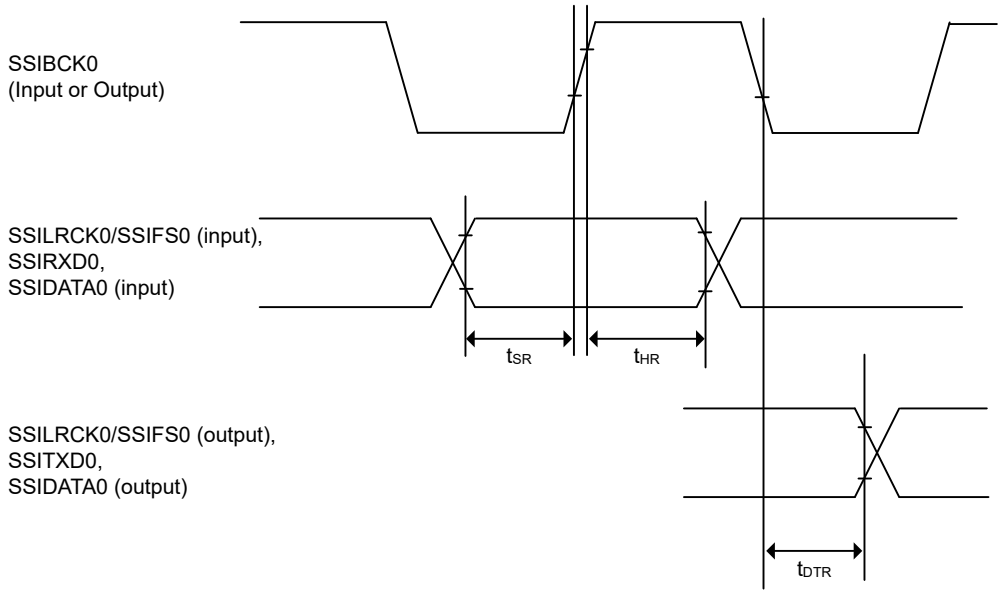

Figure 2.60 SSIE data transmit and receive timing when SSICR.BCKP = 0

Downloaded from Arrow.com.

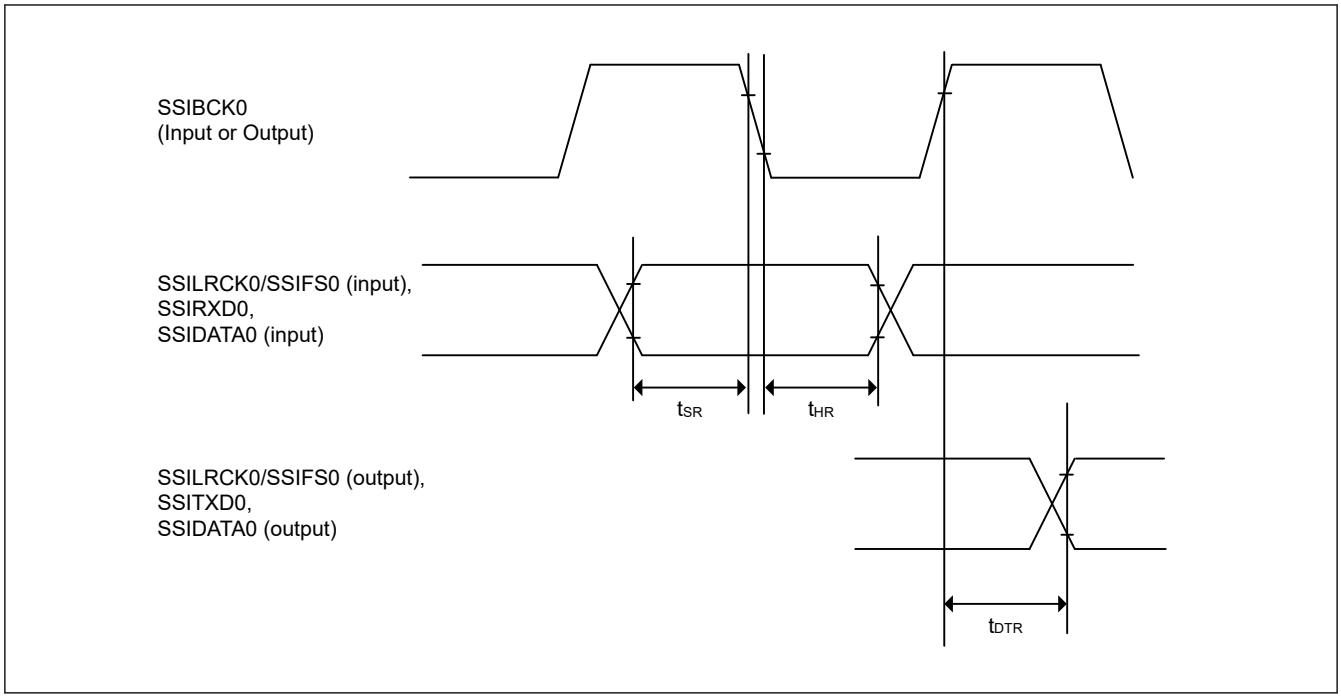

Figure 2.61 SSIE data transmit and receive timing when SSICR.BCKP = 1

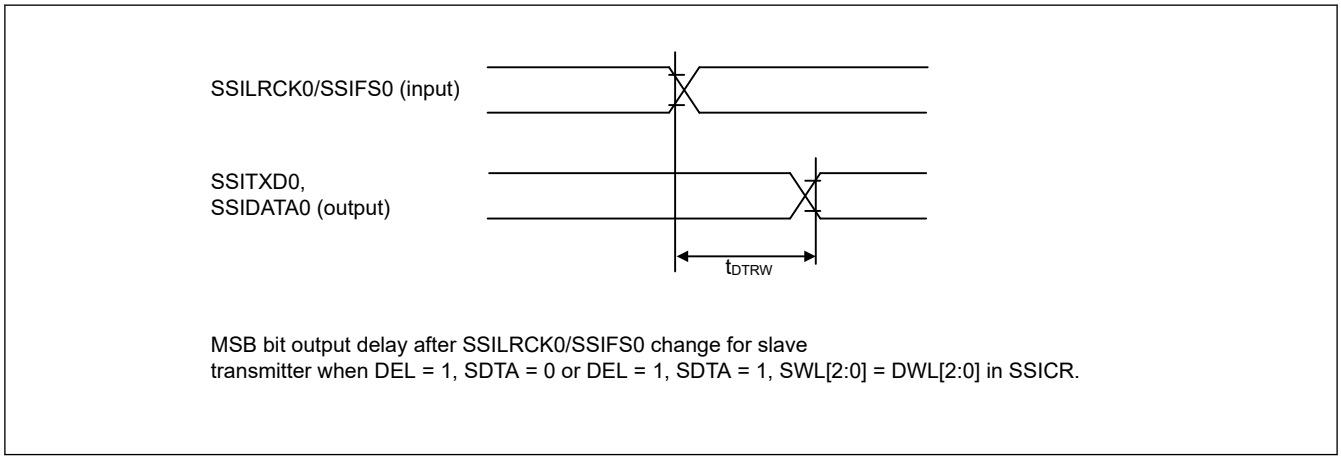

Figure 2.62 SSIE data output delay after SSILRCK0/SSIFS0 change

2.3.15 SD/MMC Host Interface Timing

Table 2.34 SD/MMC host interface signal timing (n = 0, m = 0 to 7)

Conditions: High drive output is selected in the Port Drive Capability bit in the PmnPFS register.
Clock duty ratio is 50%.

Parameter	Symbol	Min	Max	Unit	Test conditions
SDnCLK clock cycle	T_{SDCYC}	20	—	ns	Figure 2.63
SDnCLK clock high pulse width	T_{SDWH}	6.5	—	ns	
SDnCLK clock low pulse width	T_{SDWL}	6.5	—	ns	
SDnCLK clock rise time	T_{SDLH}	—	3	ns	
SDnCLK clock fall time	T_{SDHL}	—	3	ns	
SDnCMD/SDnDATm output data delay	T_{SDODLY}	–7	4	ns	
SDnCMD/SDnDATm input data setup	T_{SDIS}	4.5	—	ns	
SDnCMD/SDnDATm input data hold	T_{SDIH}	1.5	—	ns	

Downloaded from Arrow.com.

Note: Must use pins that have a letter appended to their name, for instance "_A", "_B", to indicate group membership. For the SD/MMC host interface, the AC portion of the electrical characteristics is measured for each group.

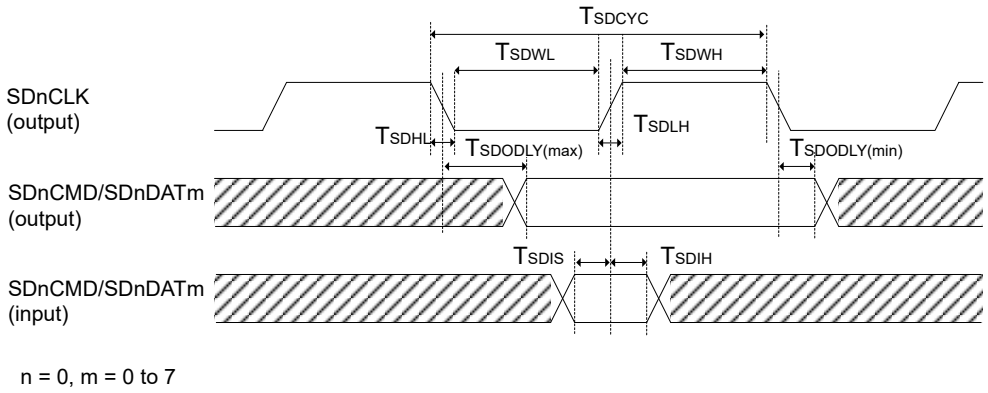

Figure 2.63 SD/MMC host interface signal timing

2.3.16 ETHERC Timing

Table 2.35 ETHERC timing (1 of 2)

Conditions: ETHERC (RMII): Middle drive output is selected in the Port Drive Capability bit in the PmnPFS register for the following pins: ET0_MDC, ET0_MDIO.
For other pins, high drive output is selected in the Port Drive Capability bit in the PmnPFS register.
ETHERC (MII): Middle drive output is selected in the Port Drive Capability bit in the PmnPFS register.

Parameter		Symbol	Min	Max	Unit	Test conditions
ETHERC (RMII)	REF50CK0 cycle time	T_{ck}	20	—	ns	Figure 2.64 to Figure 2.67
	REF50CK0 frequency, typical 50 MHz	—	—	50 + 100 ppm	MHz	
	REF50CK0 duty	—	35	65	%	
	REF50CK0 rise/fall time	$T_{ckr/ckf}$	0.5	3.5	ns	
	RMII_xxxx*1 output delay	T_{co}	2.5	12.0	ns	
	RMII_xxxx*2 setup time	T_{su}	3	—	ns	
	RMII_xxxx*2 hold time	T_{hd}	1	—	ns	
	RMII_xxxx*1, *2 rise/fall time	T_r/T_f	0.5	4	ns	
	ET0_WOL output delay	t_{WOLd}	1	23.5	ns	Figure 2.68

Downloaded from Arrow.com.

Table 2.35 ETHERC timing (2 of 2)

Conditions: ETHERC (RMII): Middle drive output is selected in the Port Drive Capability bit in the PmnPFS register for the following pins: ET0_MDC, ET0_MDIO.
For other pins, high drive output is selected in the Port Drive Capability bit in the PmnPFS register.
ETHERC (MII): Middle drive output is selected in the Port Drive Capability bit in the PmnPFS register.

Parameter		Symbol	Min	Max	Unit	Test conditions
ETHERC (MII)	ET0_TX_CLK cycle time	t_{Tcyc}	40	—	ns	—
	ET0_TX_EN output delay	t_{TENd}	1	20	ns	Figure 2.69
	ET0_ETXD0 to ET_ETXD3 output delay	t_{MTDd}	1	20	ns	
	ET0_CRS setup time	t_{CRSs}	10	—	ns	
	ET0_CRS hold time	t_{CRSh}	10	—	ns	
	ET0_COL setup time	t_{COLs}	10	—	ns	Figure 2.70
	ET0_COL hold time	t_{COLh}	10	—	ns	
	ET0_RX_CLK cycle time	t_{TRcyc}	40	—	ns	—
	ET0_RX_DV setup time	t_{RDVs}	10	—	ns	Figure 2.71
	ET0_RX_DV hold time	t_{RDVh}	10	—	ns	
	ET0_ERXD0 to ET_ERXD3 setup time	t_{MRDs}	10	—	ns	
	ET0_ERXD0 to ET_ERXD3 hold time	t_{MRDh}	10	—	ns	
	ET0_RX_ER setup time	t_{RERs}	10	—	ns	Figure 2.72
	ET0_RX_ER hold time	t_{RESh}	10	—	ns	
	ET0_WOL output delay	t_{WOLd}	1	23.5	ns	Figure 2.73

Note: The following pins must use pins that have a letter appended to their name, for instance "_A", "_B", to indicate group membership. For the ETHERC (RMII) Host interface, the AC portion of the electrical characteristics is measured for each group. REF50CK0_A, REF50CK0_B, RMII0_xxxx_A, RMII0_xxxx_B.
Note 1. RMII_TXD_EN, RMII_TXD1, RMII_TXD0.
Note 2. RMII_CRS_DV, RMII_RXD1, RMII_RXD0, RMII_RX_ER.

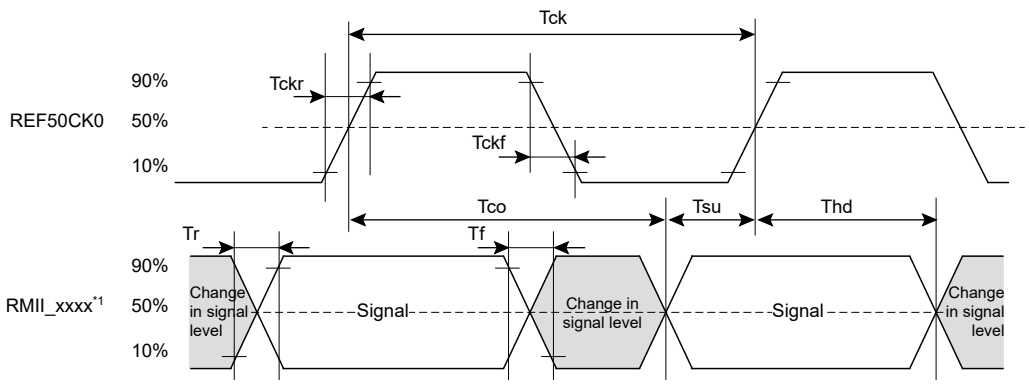

Note 1. RMII_TXD_EN, RMII_TXD1, RMII_TXD0, RMII_CRS_DV, RMII_RXD1, RMII_RXD0, RMII_RX_ER

Figure 2.64 REF50CK0 and RMII signal timing

Downloaded from Arrow.com.

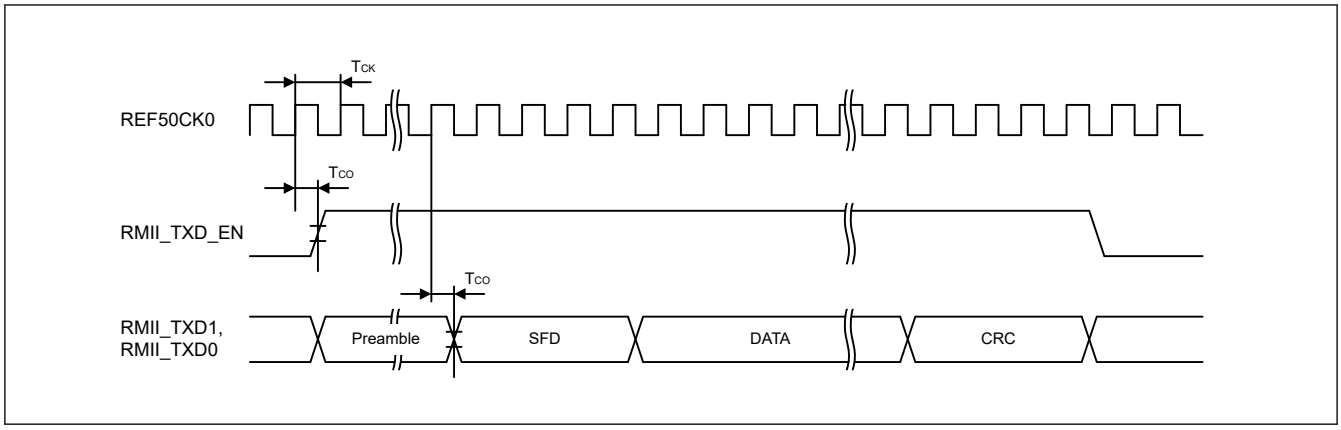

Figure 2.65 RMII transmission timing

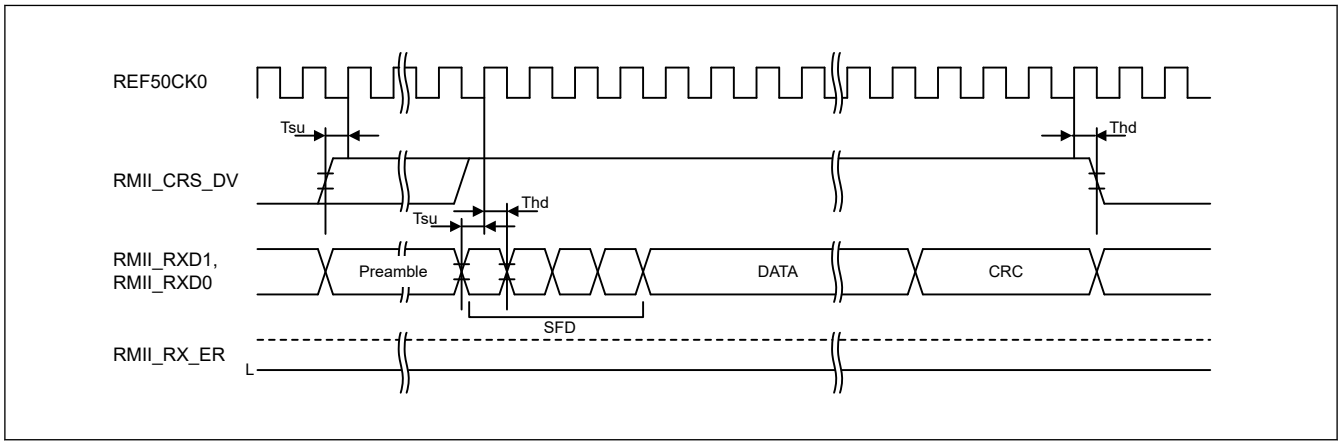

Figure 2.66 RMII reception timing in normal operation

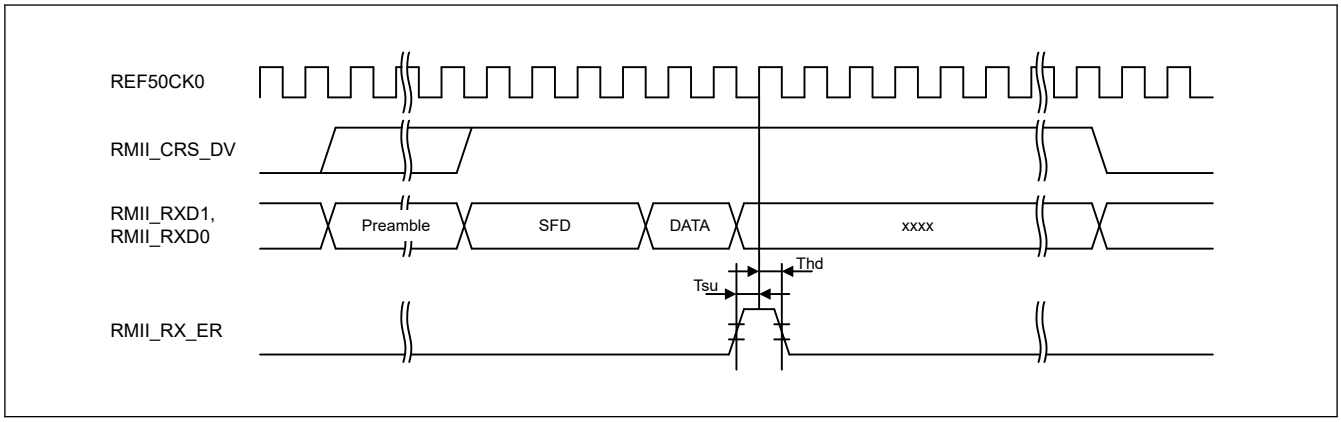

Figure 2.67 RMII reception timing when an error occurs

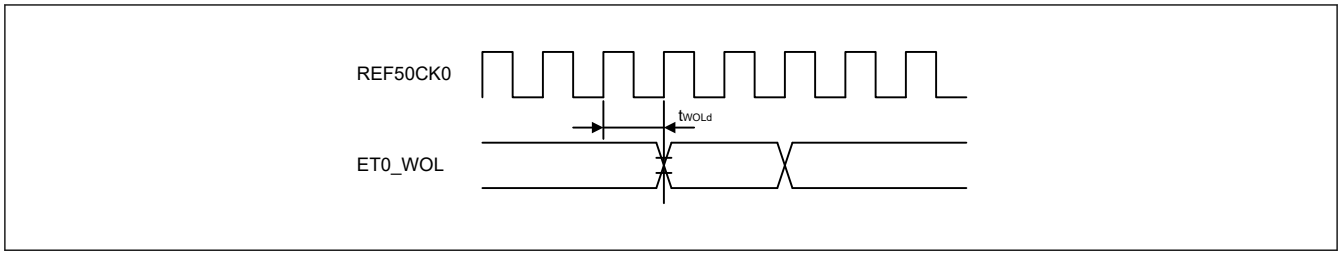

Figure 2.68 WOL output timing for RMII

Downloaded from Arrow.com.

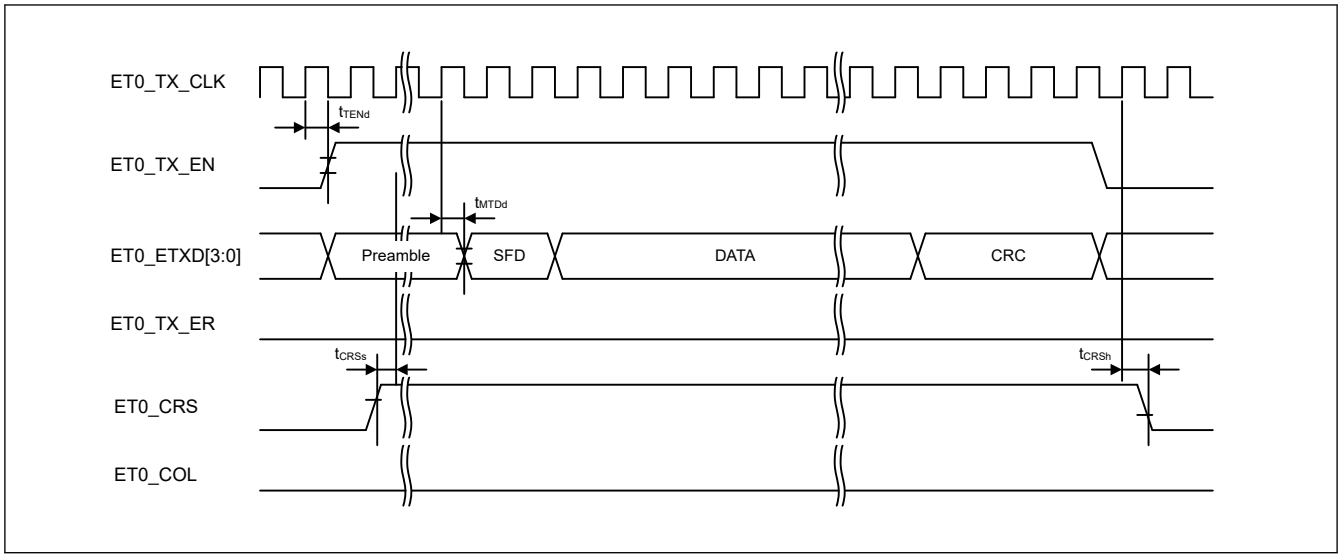

Figure 2.69 MII transmission timing in normal operation

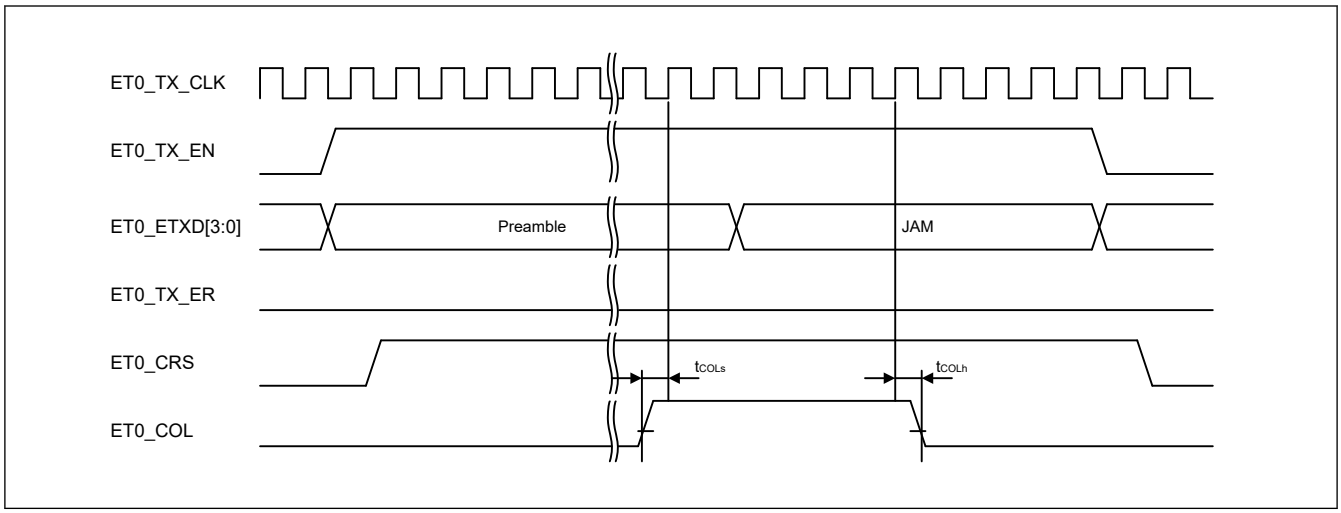

Figure 2.70 MII transmission timing when a conflict occurs

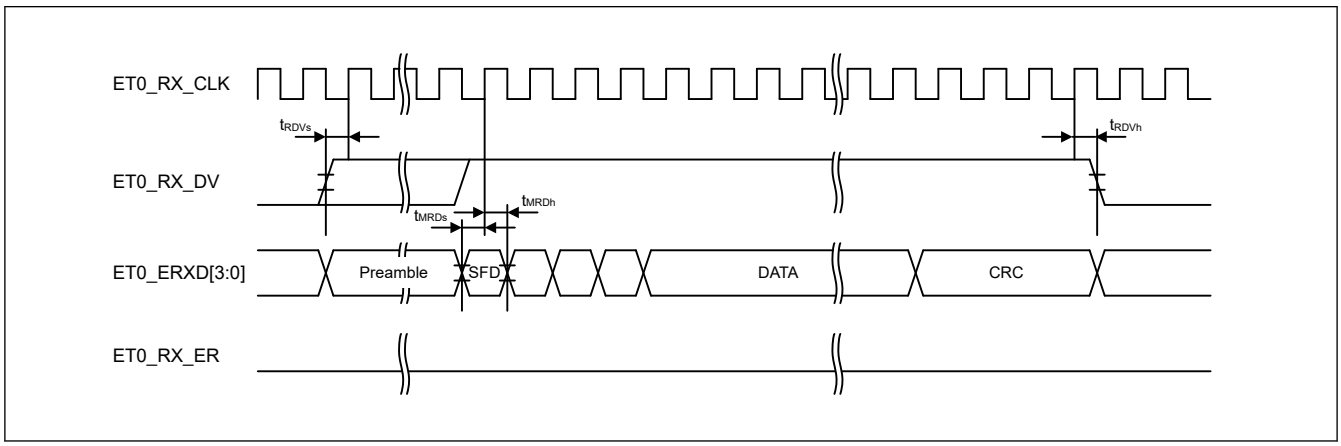

Figure 2.71 MII reception timing in normal operation

Downloaded from Arrow.com.

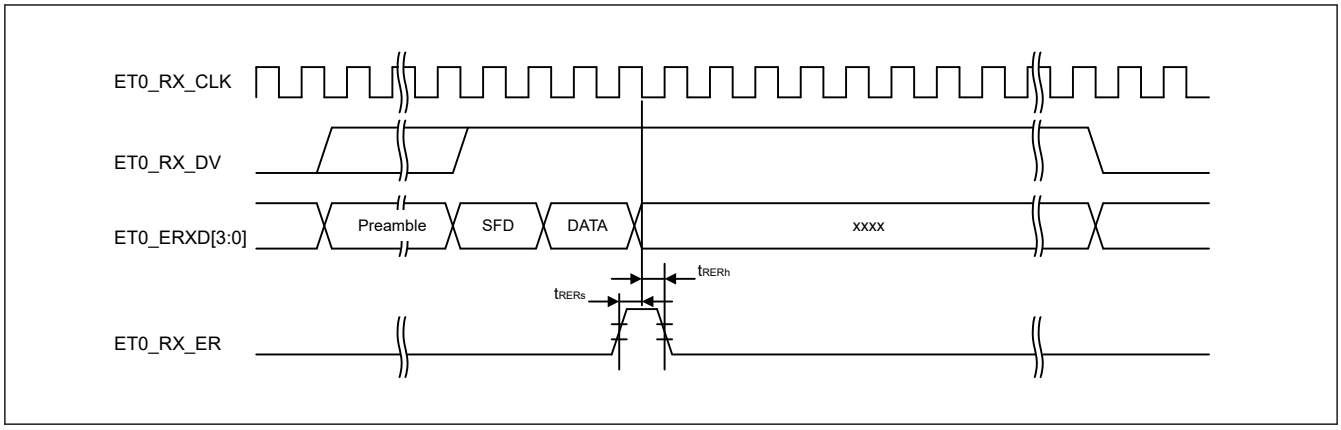

Figure 2.72 MII reception timing when an error occurs

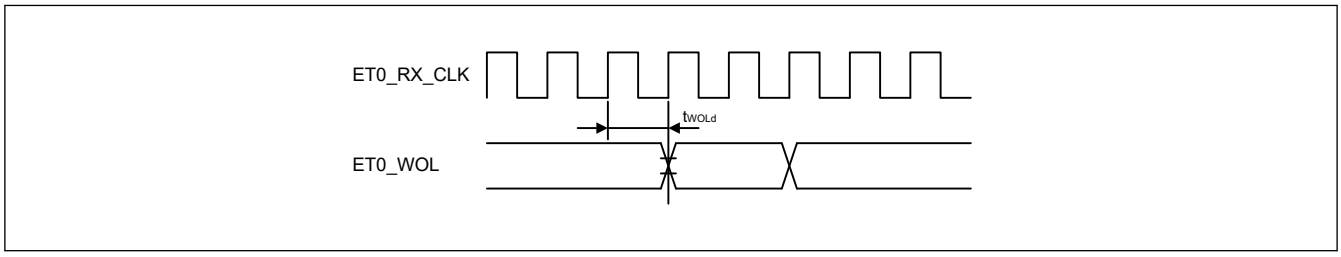

Figure 2.73 WOL output timing for MII

2.4 USB Characteristics

2.4.1 USBFS Timing

Table 2.36 USBFS low-speed characteristics for host only (USB_DP and USB_DM pin characteristics)

Conditions: VCC = AVCC0 = VCC_USB = VBATT = 3.0 to 3.6V, 2.7 ≤ VREFH0/VREFH ≤ AVCC0, USBCLK = 48 MHz

Parameter		Symbol	Min	Typ	Max	Unit	Test conditions
Input characteristics	Input high voltage	V_{IH}	2.0	—	—	V	—
	Input low voltage	V_{IL}	—	—	0.8	V	—
	Differential input sensitivity	V_{DI}	0.2	—	—	V	| USB_DP - USB_DM |
	Differential common-mode range	V_{CM}	0.8	—	2.5	V	—
Output characteristics	Output high voltage	V_{OH}	2.8	—	3.6	V	I_{OH} = –200 μA
	Output low voltage	V_{OL}	0.0	—	0.3	V	I_{OL} = 2 mA
	Cross-over voltage	V_{CRS}	1.3	—	2.0	V	Figure 2.74
	Rise time	t_{LR}	75	—	300	ns	
	Fall time	t_{LF}	75	—	300	ns	
	Rise/fall time ratio	t_{LR} / t_{LF}	80	—	125	%	t_{LR}/ t_{LF}
Pull-up and pull-down characteristics	USB_DP and USB_DM pull-down resistance in host controller mode	R_{pd}	14.25	—	24.80	kΩ	—

Downloaded from Arrow.com.

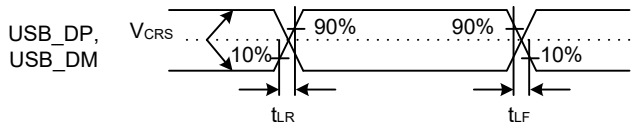

Figure 2.74 USB_DP and USB_DM output timing in low-speed mode

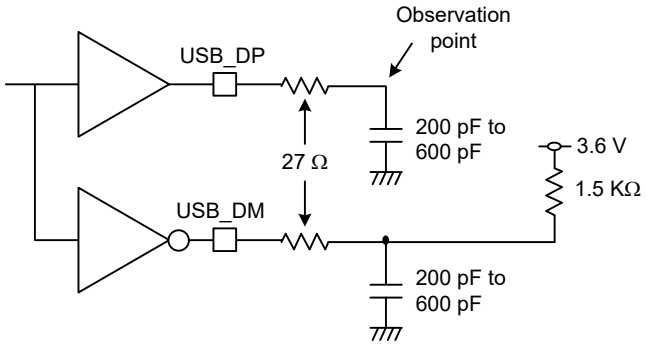

Figure 2.75 Test circuit in low-speed mode

Table 2.37 USBFS full-speed characteristics (USB_DP and USB_DM pin characteristics)

Conditions: VCC = AVCC0 = VCC_USB = VBATT = 3.0 to 3.6 V, 2.7 ≤ VREFH0/VREFH ≤ AVCC0, USBCLK = 48 MHz

Parameter		Symbol	Min	Typ	Max	Unit	Test conditions
Input characteristics	Input high voltage	V_{IH}	2.0	—	—	V	—
	Input low voltage	V_{IL}	—	—	0.8	V	—
	Differential input sensitivity	V_{DI}	0.2	—	—	V	| USB_DP - USB_DM |
	Differential common-mode range	V_{CM}	0.8	—	2.5	V	—
Output characteristics	Output high voltage	V_{OH}	2.8	—	3.6	V	I_{OH} = –200 μA
	Output low voltage	V_{OL}	0.0	—	0.3	V	I_{OL} = 2 mA
	Cross-over voltage	V_{CRS}	1.3	—	2.0	V	Figure 2.76
	Rise time	t_{LR}	4	—	20	ns	
	Fall time	t_{LF}	4	—	20	ns	
	Rise/fall time ratio	t_{LR} / t_{LF}	90	—	111.11	%	t_{FR}/ t_{FF}
	Output resistance	Z_{DRV}	28	—	44	Ω	USBFS: Rs = 27 Ω included
Pull-up and pull-down characteristics	DM pull-up resistance in device controller mode	R_{pu}	0.900	—	1.575	kΩ	During idle state
			1.425	—	3.090	kΩ	During transmission and reception
	USB_DP and USB_DM pull-down resistance in host controller mode	R_{pd}	14.25	—	24.80	kΩ	—

Downloaded from Arrow.com.

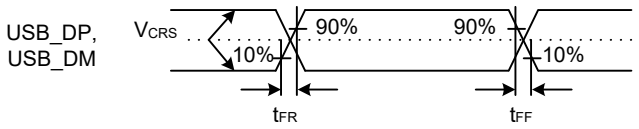

Figure 2.76 USB_DP and USB_DM output timing in full-speed mode

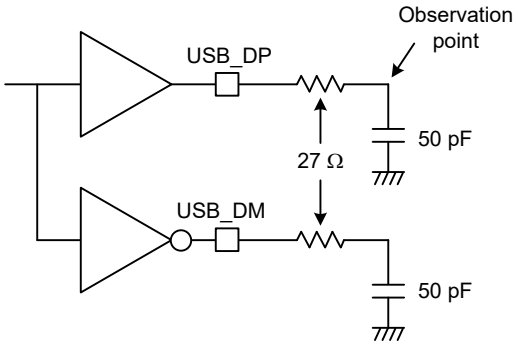

Figure 2.77 Test circuit in full-speed mode

Table 2.38 USBFS characteristics (USB_DP and USB_DM pin characteristics)

Conditions: VCC = AVCC0 = VCC_USB = VBATT = 3.0 to 3.6 V, 2.7 ≤ VREFH0/VREFH ≤ AVCC0, USBCLK = 48 MHz

Parameter		Symbol	Min	Typ	Max	Unit	Test conditions
Battery Charging Specification	D+ sink current	I_{DP_SINK}	25	—	175	μA	—
	D- sink current	I_{DM_SINK}	25	—	175	μA	—
	DCD source current	I_{DP_SRC}	7	—	13	μA	—
	Data detection voltage	V_{DAT_REF}	0.25	—	0.4	V	—
	D+ source voltage	V_{DP_SRC}	0.5	—	0.7	V	Output current = 250 μA
	D- source voltage	V_{DM_SRC}	0.5	—	0.7	V	Output current = 250 μA

2.5 ADC12 Characteristics

Table 2.39 A/D conversion characteristics for unit 0 (1 of 2)

Conditions: PCLKC = 1 to 50 MHz

Parameter	Min	Typ	Max	Unit	Test conditions
Frequency	1	—	50	MHz	—
Analog input capacitance	—	—	30	pF	—
Quantization error	—	±0.5	—	LSB	—
Resolution	—	—	12	Bits	—

Downloaded from Arrow.com.

Table 2.39 A/D conversion characteristics for unit 0 (2 of 2)

Conditions: PCLKC = 1 to 50 MHz

Parameter			Min	Typ	Max	Unit	Test conditions
High-precision high-speed channels (AN000 to AN005)	Conversion time*1 (operation at PCLKC = 50 MHz)	Permissible signal source impedance Max. = 1 kΩ	0.52 (0.26)*2	—	—	μs	Sampling in 13 states
		Max. = 400 Ω	0.40 (0.14)*2	—	—	μs	Sampling in 7 states VCC = AVCC0 = 3.0 to 3.6 V 3.0 V ≤ VREFH0 ≤ AVCC0
	Offset error		—	±1.0	±2.5	LSB	—
	Full-scale error		—	±1.0	±2.5	LSB	—
	Absolute accuracy		—	±2.0	±4.5	LSB	—
	DNL differential nonlinearity error		—	±0.5	±1.5	LSB	—
	INL integral nonlinearity error		—	±1.0	±2.5	LSB	—
High-precision normal-speed channels (AN006 to AN009, AN012, AN013)	Conversion time*1 (Operation at PCLKC = 50 MHz)	Permissible signal source impedance Max. = 1 kΩ	0.92 (0.66)*2	—	—	μs	Sampling in 33 states
	Offset error		—	±1.0	±2.5	LSB	—
	Full-scale error		—	±1.0	±2.5	LSB	—
	Absolute accuracy		—	±2.0	±4.5	LSB	—
	DNL differential nonlinearity error		—	±0.5	±1.5	LSB	—
	INL integral nonlinearity error		—	±1.0	±2.5	LSB	—

Note: These specification values apply when there is no access to the external memory during A/D conversion. If access occurs during A/D conversion, values might not fall within the indicated ranges.
The use of PORT0 as digital outputs is not allowed when the 12-bit A/D converter is used.
The characteristics apply when AVCC0, AVSS0, VREFH0/VREFH, VREFL0, VREFL, and 12-bit A/D converter input voltage are stable.

Note: When both unit0 and unit1 are used, do not select the following analog input combinations at the same time except the interleave function. If selected, values might not fall within the indicated ranges.
- AN100 and AN000 or AN001 or AN002
- AN101 and AN000 or AN001 or AN002 or AN003
- AN102 and AN000 or AN001 or AN002 or AN003 or AN004

Note 1. The conversion time includes the sampling and comparison times. The number of sampling states is indicated for the test conditions.

Note 2. Values in parentheses indicate the sampling time.

Table 2.40 A/D conversion characteristics for unit 1 (1 of 2)

Conditions: PCLKC = 1 to 50 MHz

Parameter	Min	Typ	Max	Unit	Test conditions
Frequency	1	—	50	MHz	—
Analog input capacitance	—	—	30	pF	—
Quantization error	—	±0.5	—	LSB	—
Resolution	—	—	12	Bits	—

Downloaded from Arrow.com.

Table 2.40 A/D conversion characteristics for unit 1 (2 of 2)

Conditions: PCLKC = 1 to 50 MHz

Parameter			Min	Typ	Max	Unit	Test conditions
High-precision high-speed channels (AN100 to AN102)	Conversion time*1 (Operation at PCLKC = 50 MHz)	Permissible signal source impedance Max. = 1 kΩ	0.52 (0.26)*2	—	—	μs	Sampling in 13 states
		Max. = 400 Ω	0.40 (0.14)*2	—	—	μs	Sampling in 7 states VCC = AVCC0 = 3.0 to 3.6 V 3.0 V ≤ VREFH ≤ AVCC0
	Offset error		—	±1.0	±2.5	LSB	—
	Full-scale error		—	±1.0	±2.5	LSB	—
	Absolute accuracy		—	±2.0	±4.5	LSB	—
	DNL differential nonlinearity error		—	±0.5	±1.5	LSB	—
	INL integral nonlinearity error		—	±1.0	±2.5	LSB	—
Normal-precision normal-speed channels (AN116 to AN122)	Conversion time*1 (Operation at PCLKC = 50 MHz)	Permissible signal source impedance Max. = 1 kΩ	0.92 (0.66)*2	—	—	μs	Sampling in 33 states
	Offset error		—	±1.0	±5.5	LSB	—
	Full-scale error		—	±1.0	±5.5	LSB	—
	Absolute accuracy		—	±2.0	±7.5	LSB	—
	DNL differential nonlinearity error		—	±0.5	±4.5	LSB	—
	INL integral nonlinearity error		—	±1.0	±5.5	LSB	—

Note: These specification values apply when there is no access to the external memory during A/D conversion. If access occurs during A/D conversion, values might not fall within the indicated ranges.
The use of PORT0 as digital outputs is not allowed when the 12-bit A/D converter is used.
The characteristics apply when AVCC0, AVSS0, VREFH0/VREFH, VREFL0, VREFL, and 12-bit A/D converter input voltage are stable.

Note: When both unit0 and unit1 are used, do not select the following analog input combinations at the same time except the interleave function. If selected, values might not fall within the indicated ranges.
- AN100 and AN000 or AN001 or AN002
- AN101 and AN000 or AN001 or AN002 or AN003
- AN102 and AN000 or AN001 or AN002 or AN003 or AN004

Note 1. The conversion time includes the sampling and comparison times. The number of sampling states is indicated for the test conditions.

Note 2. Values in parentheses indicate the sampling time.

Table 2.41 A/D conversion characteristics for interleaving (1 of 2)

Conditions: PCLKC = 1 to 50 MHz

Parameter	Min	Typ	Max	Unit	Test conditions
Frequency	1	—	50	MHz	—
Analog input capacitance	—	—	30	pF	—
Quantization error	—	±0.5	—	LSB	—
Resolution	—	—	12	Bits	—

Downloaded from Arrow.com.

Table 2.41 A/D conversion characteristics for interleaving (2 of 2)

Conditions: PCLKC = 1 to 50 MHz

Parameter			Min	Typ	Max	Unit	Test conditions
High-precision high-speed channels (AN000 & AN100, AN001 & AN101, AN002 & AN102))	Conversion time*1 (operation at PCLKC = 50 MHz)	Max. = 400 Ω	0.2	—	—	μs	Sampling in 7 states VCC = AVCC0 = 3.0 to 3.6 V 3.0 V ≤ VREFH0 ≤ AVCC0
	Offset error		—	±1.0	±2.5	LSB	—
	Full-scale error		—	±1.0	±2.5	LSB	—
	Absolute accuracy		—	±2.0	±4.5	LSB	—
	DNL differential nonlinearity error		—	±0.5	±3.5	LSB	—
	INL integral nonlinearity error		—	±1.0	±3.5	LSB	—

Note: These specification values apply when there is no access to the external memory during A/D conversion. If access occurs during A/D conversion, values might not fall within the indicated ranges.
The use of PORT0 as digital outputs is not allowed when the 12-bit A/D converter is used.
The characteristics apply when AVCC0, AVSS0, VREFH0/VREFH, VREFL0, VREFL, and 12-bit A/D converter input voltage are stable.

Note 1. The conversion time includes the sampling and comparison times. The number of sampling states is indicated for the test conditions.

Table 2.42 A/D internal reference voltage characteristics

Parameter	Min	Typ	Max	Unit	Test conditions
A/D internal reference voltage	1.13	1.18	1.23	V	—
Sampling time	4.15	—	—	μs	—

Downloaded from Arrow.com.

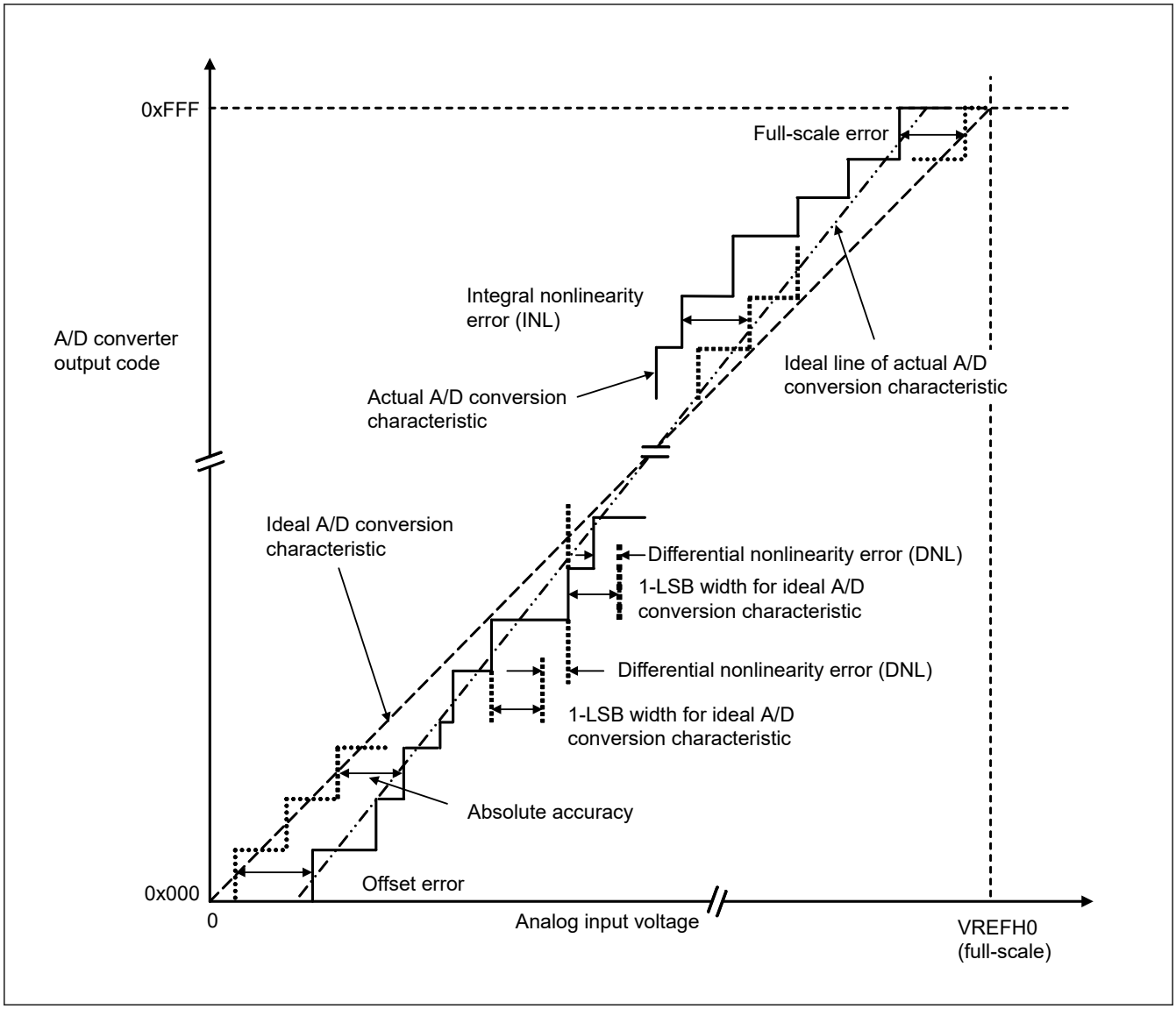

Figure 2.78 Illustration of ADC12 characteristic terms

Absolute accuracy

Absolute accuracy is the difference between output code based on the theoretical A/D conversion characteristics, and the actual A/D conversion result. When measuring absolute accuracy, the voltage at the midpoint of the width of the analog input voltage (1-LSB width), which can meet the expectation of outputting an equal code based on the theoretical A/D conversion characteristics, is used as an analog input voltage. For example, if 12-bit resolution is used and the reference voltage VREFH0 = 3.072 V, then the 1-LSB width becomes 0.75 mV, and 0 mV, 0.75 mV, and 1.5 mV are used as the analog input voltages. If the analog input voltage is 6 mV, an absolute accuracy of ±5 LSB means that the actual A/D conversion result is in the range of 0x003 to 0x00D, though an output code of 0x008 can be expected from the theoretical A/D conversion characteristics.

Integral nonlinearity error (INL)

Integral nonlinearity error is the maximum deviation between the ideal line when the measured offset and full-scale errors are zeroed, and the actual output code.

Differential nonlinearity error (DNL)

Differential nonlinearity error is the difference between the 1-LSB width based on the ideal A/D conversion characteristics and the width of the actual output code.

Offset error

Offset error is the difference between the transition point of the ideal first output code and the actual first output code.

Downloaded from Arrow.com.

Full-scale error

Full-scale error is the difference between the transition point of the ideal last output code and the actual last output code.

2.6 DAC12 Characteristics

Table 2.43 D/A conversion characteristics

Parameter	Min	Typ	Max	Unit	Test conditions
Resolution	—	—	12	Bits	—
Without output amplifier					
Absolute accuracy	—	—	±24	LSB	Resistive load 2 MΩ
INL	—	±2.0	±8.0	LSB	Resistive load 2 MΩ
DNL	—	±1.0	±2.0	LSB	—
Output impedance	—	8.5	—	kΩ	—
Conversion time	—	—	3	μs	Resistive load 2 MΩ, Capacitive load 20 pF
Output voltage range	0	—	VREFH	V	—
With output amplifier					
INL	—	±2.0	±4.0	LSB	—
DNL	—	±1.0	±2.0	LSB	—
Conversion time	—	—	4.0	μs	—
Resistive load	5	—	—	kΩ	—
Capacitive load	—	—	50	pF	—
Output voltage range	0.2	—	VREFH – 0.2	V	—

2.7 TSN Characteristics

Table 2.44 TSN characteristics

Parameter	Symbol	Min	Typ	Max	Unit	Test conditions
Relative accuracy	—	—	± 1.0	—	°C	—
Temperature slope	—	—	4.0	—	mV/°C	—
Output voltage (at 25 °C)	—	—	1.24	—	V	—
Temperature sensor start time	t_{START}	—	—	30	μs	—
Sampling time	—	4.15	—	—	μs	—

2.8 OSC Stop Detect Characteristics

Table 2.45 Oscillation stop detection circuit characteristics

Parameter	Symbol	Min	Typ	Max	Unit	Test conditions
Detection time	t_{dr}	—	—	1	ms	Figure 2.79

Downloaded from Arrow.com.

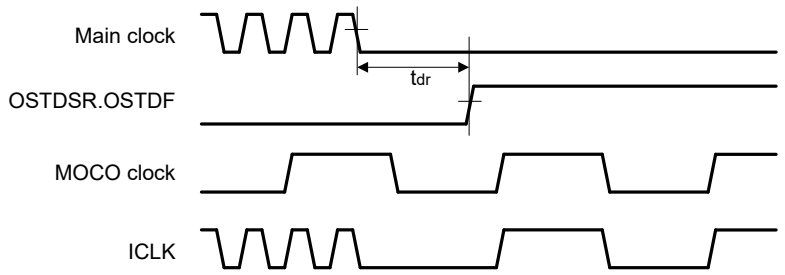

Figure 2.79 Oscillation stop detection timing

2.9 POR and LVD Characteristics

Table 2.46 Power-on reset circuit and voltage detection circuit characteristics (1)

Parameter			Symbol	Min	Typ	Max	Unit	Test conditions
Voltage detection level	Power-on reset (POR)	DPSBYCR.DEEPCUT[1:0] = 00b or 01b.	V_{POR}	2.5	2.6	2.7	V	Figure 2.80
		DPSBYCR.DEEPCUT[1:0] = 11b.		1.8	2.25	2.7		
	Voltage detection circuit (LVD0)		V_{det0_1}	2.84	2.94	3.04		Figure 2.81
			V_{det0_2}	2.77	2.87	2.97		
			V_{det0_3}	2.70	2.80	2.90		
	Voltage detection circuit (LVD1)		V_{det1_1}	2.89	2.99	3.09		Figure 2.82
			V_{det1_2}	2.82	2.92	3.02		
			V_{det1_3}	2.75	2.85	2.95		
	Voltage detection circuit (LVD2)		V_{det2_1}	2.89	2.99	3.09		Figure 2.83
			V_{det2_2}	2.82	2.92	3.02		
			V_{det2_3}	2.75	2.85	2.95		
Internal reset time	Power-on reset time		t_{POR}	—	4.5	—	ms	Figure 2.80
	LVD0 reset time		t_{LVD0}	—	0.51	—		Figure 2.81
	LVD1 reset time		t_{LVD1}	—	0.38	—		Figure 2.82
	LVD2 reset time		t_{LVD2}	—	0.38	—		Figure 2.83
Minimum VCC down time*1			t_{VOFF}	200	—	—	μs	Figure 2.80, Figure 2.81
Response delay			t_{det}	—	—	200	μs	Figure 2.81 to Figure 2.83
LVD operation stabilization time (after LVD is enabled)			$t_{d(E-A)}$	—	—	10	μs	Figure 2.82, Figure 2.83
Hysteresis width (LVD1 and LVD2)			V_{LVH}	—	70	—	mV	

Note 1. The minimum VCC down time indicates the time when VCC is below the minimum value of voltage detection levels V_{POR}, V_{det0}, V_{det1}, and V_{det2} for POR and LVD.

Downloaded from Arrow.com.

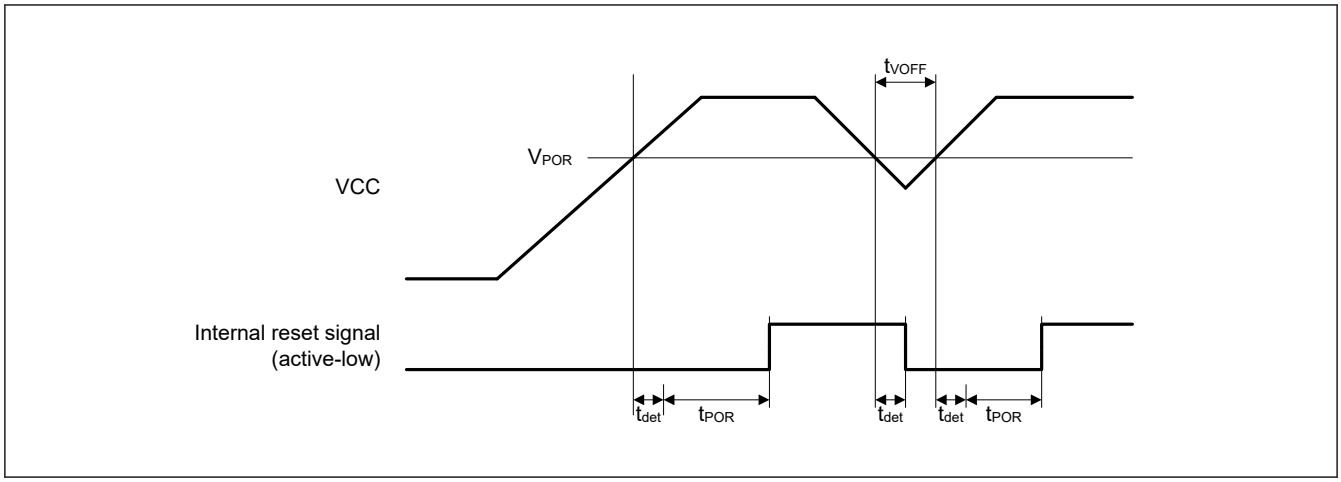

Figure 2.80 Power-on reset timing

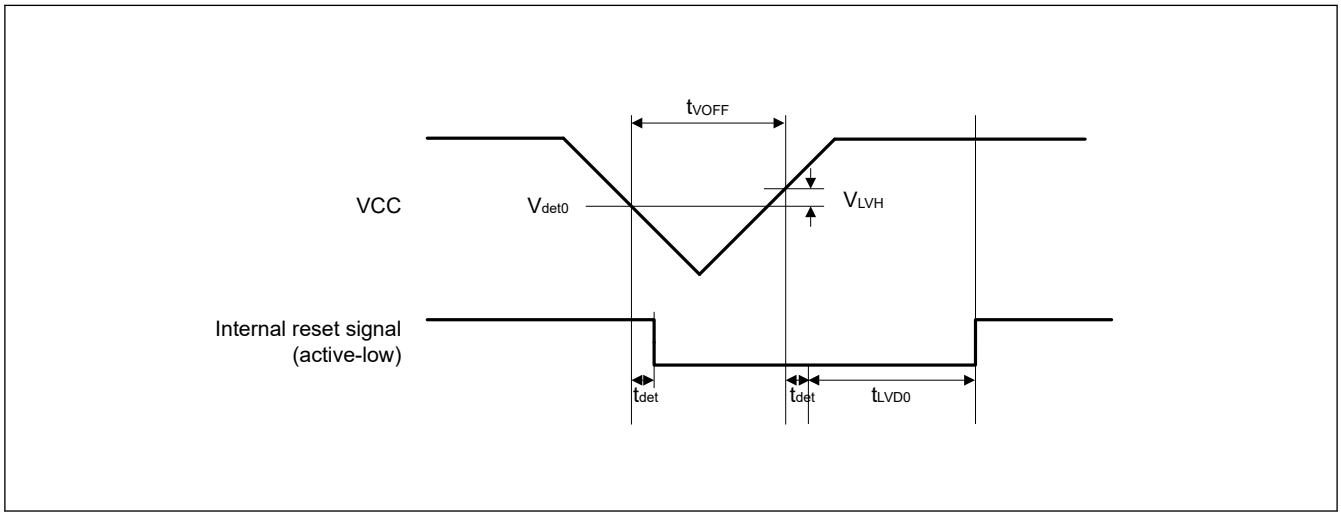

Figure 2.81 Voltage detection circuit timing (V_{det0})

Downloaded from Arrow.com.

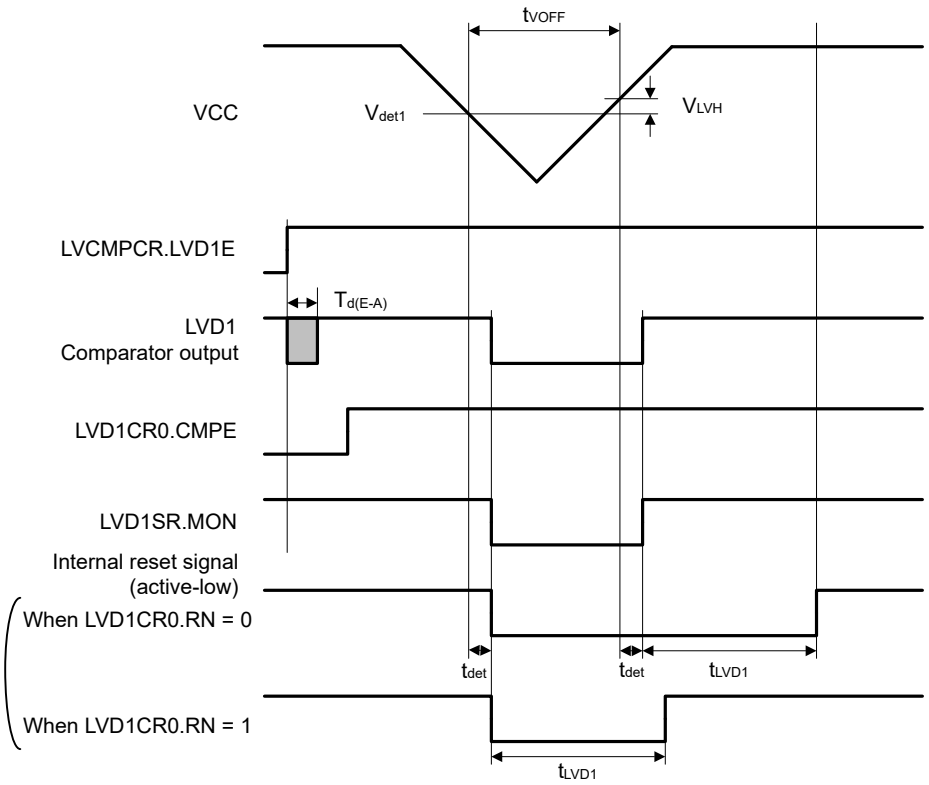

Figure 2.82 Voltage detection circuit timing (V_{det1})

Downloaded from Arrow.com.

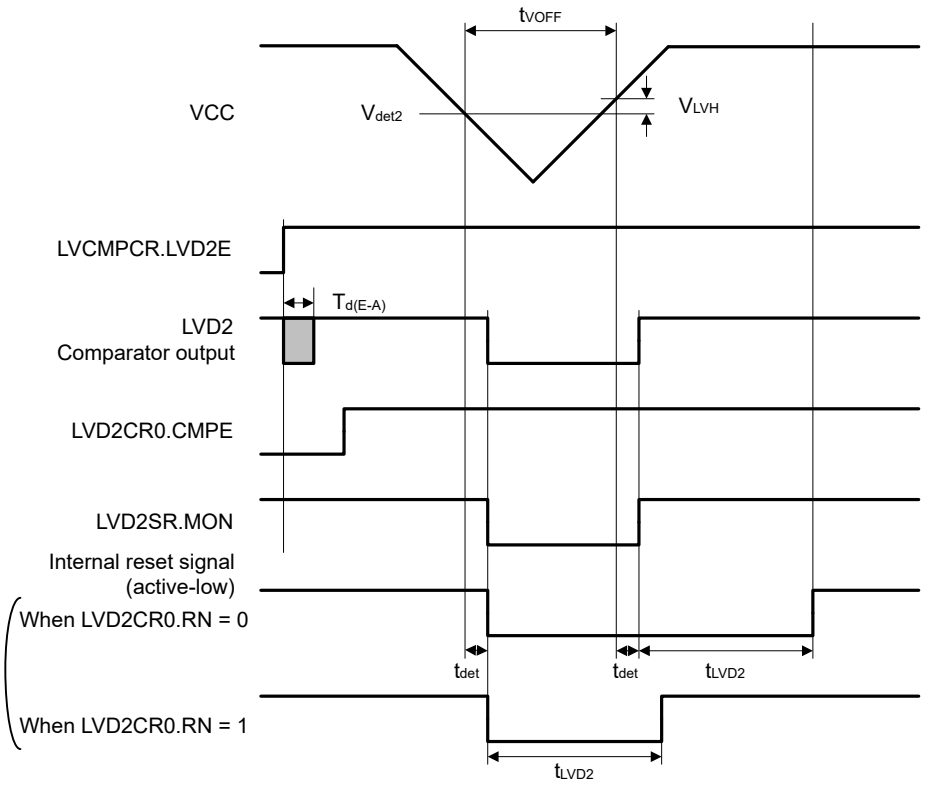

Figure 2.83 Voltage detection circuit timing (V_{det2})

2.10 VBATT Characteristics

Table 2.47 Battery backup function characteristics

Conditions: VCC = AVCC0 = VCC_USB = 2.7 to 3.6 V, 2.7 ≤ VREFH0/VREFH ≤ AVCC0, VBATT = 1.65 to 3.6 V*1

Parameter	Symbol	Min	Typ	Max	Unit	Test conditions
Voltage level for switching to battery backup	$V_{DETBATT}$	2.50	2.60	2.70	V	Figure 2.84
Lower-limit VBATT voltage for power supply switching caused by VCC voltage drop	V_{BATTSW}	2.70	—	—	V	
VCC-off period for starting power supply switching	$t_{VOFFBATT}$	200	—	—	μs	
VBATT low voltage detection level	$V_{battldet}$	1.8	1.9	2.0	V	Figure 2.85
Minimum VBATT down time	$t_{BATTOFF}$	200	—	—	μs	
Response delay	$t_{BATTdet}$	—	—	200	μs	
VBATT monitor operation stabilization time (after VBATTMNSELR.VBATTMNSEL is changed to 1)	$t_{d(E-A)}$	—	—	20	μs	
VBATT current increase (when VBATTMNSELR.VBATTMNSEL is 1 compared to the case that VBATTMNSELR.VBATTMNSEL is 0)	$I_{VBATTSEL}$	—	140	350	nA	

Note: The VCC-off period for starting power supply switching indicates the period in which VCC is below the minimum value of the voltage level for switching to battery backup ($V_{DETBATT}$).

Note 1. Low CL crystal cannot be used below VBATT = 1.8 V.

Downloaded from Arrow.com.

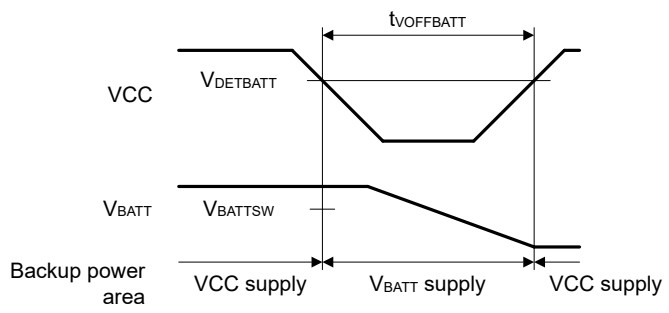

Figure 2.84 Battery backup function characteristics

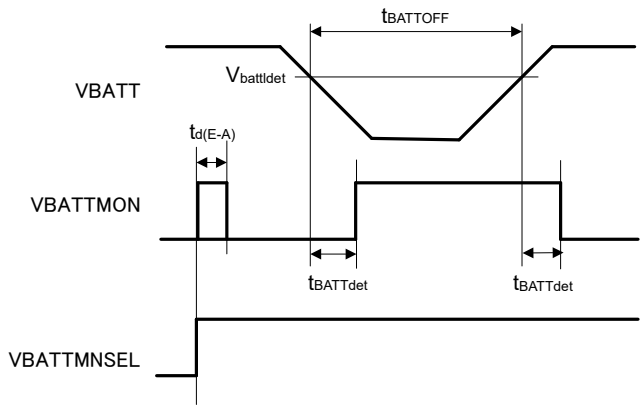

Figure 2.85 Battery backup function characteristics

2.11 CTSU Characteristics

Table 2.48 CTSU characteristics

Parameter	Symbol	Min	Typ	Max	Unit	Test conditions
External capacitance connected to TSCAP pin	C_{tscap}	9	10	11	nF	—
TS pin capacitive load	C_{base}	—	—	50	pF	—
Permissible output high current	ΣI_{oH}	—	—	-40	mA	When the mutual capacitance method is applied

Downloaded from Arrow.com.

Table 2.49 CTSU measured capacitance reduction characteristics due to VCC power supply ripple noise (reference value)

Conditions: 2.4 V ≤ VCC ≤ 5.5 V, VSS = 0 V, Ta = –40 to +105 °C, Cp = 20 pF

Item		Symbol	Min	Typ	Max	Unit	Test conditions (ripple noise amplitude)
Measured capacitance reduction characteristics*1	Ripple noise frequency < 20 kHz	C_{down}	—	—	0.05	pF	100 mVpp
	20 kHz ≤ Ripple noise frequency ≤ 300 kHz		—	—	0.26		30 mVpp
			—	—	0.59		50 mVpp
			—	—	0.86		100 mVpp
	300 kHz < Ripple noise frequency		—	—	0.12		100 mVpp

Note 1. These are the values under the following conditions:

- When using the Self-capacitance method (CTSUCR1.MD1 = 0).
- When CTSU Power Supply Capacity Adjustment is Normal output (CTSUCR1.ATUNE1 = 0).
- When the target value for offset adjustment is 37.5%. For an overview of offset adjustment, see "Section 3.2 Offset Tuning Target" in the Application Note of "Capacitive Sensor MCU QE for Capacitive Touch Advanced Mode Parameter Guide (R30AN0428)".

Remark: Cp = Parasitic capacitance

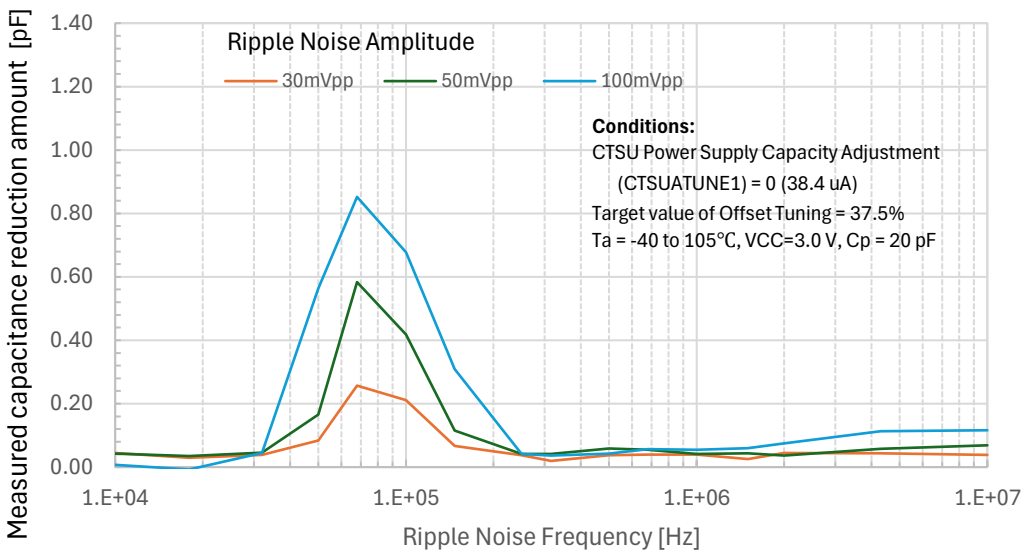

Note: See the Application Note for Capacitive Sensor MCU of "Capacitive Touch QE for Capacitive Touch Advanced Mode Parameter Guide (R30AN0428)".

Figure 2.86 Measured capacitance reduction amount

Downloaded from Arrow.com.

2.12 Flash Memory Characteristics

2.12.1 Code Flash Memory Characteristics

Table 2.50 Code flash memory characteristics

Conditions: Program or erase: FCLK = 4 to 50 MHz
Read: FCLK ≤ 50 MHz

Parameter		Symbol	FCLK = 4 MHz			20 MHz ≤ FCLK ≤ 50 MHz			Unit	Test conditions
			Min	Typ*6	Max	Min	Typ*6	Max		
Programming time N_{PEC} ≤ 100 times	128-byte	t_{P128}	—	0.75	13.2	—	0.34	6.0	ms	
	8-KB	t_{P8K}	—	49	176	—	22	80	ms	
	32-KB	t_{P32K}	—	194	704	—	88	320	ms	
Programming time N_{PEC} > 100 times	128-byte	t_{P128}	—	0.91	15.8	—	0.41	7.2	ms	
	8-KB	t_{P8K}	—	60	212	—	27	96	ms	
	32-KB	t_{P32K}	—	234	848	—	106	384	ms	
Erasure time N_{PEC} ≤ 100 times	8-KB	t_{E8K}	—	78	216	—	43	120	ms	
	32-KB	t_{E32K}	—	283	864	—	157	480	ms	
Erasure time N_{PEC} > 100 times	8-KB	t_{E8K}	—	94	260	—	52	144	ms	
	32-KB	t_{E32K}	—	341	1040	—	189	576	ms	
Reprogramming/erasure cycle*4		N_{PEC}	10000*1	—	—	10000*1	—	—	Times	
Suspend delay during programming		t_{SPD}	—	—	264	—	—	120	μs	
Programming resume time		t_{PRT}	—	—	110	—	—	50	μs	
First suspend delay during erasure in suspend priority mode		t_{SESD1}	—	—	216	—	—	120	μs	
Second suspend delay during erasure in suspend priority mode		t_{SESD2}	—	—	1.7	—	—	1.7	ms	
Suspend delay during erasure in erasure priority mode		t_{SEED}	—	—	1.7	—	—	1.7	ms	
First erasing resume time during erasure in suspend priority mode*5		t_{REST1}	—	—	1.7	—	—	1.7	ms	
Second erasing resume time during erasure in suspend priority mode		t_{REST2}	—	—	144	—	—	80	μs	
Erasing resume time during erasure in erasure priority mode		t_{REET}	—	—	144	—	—	80	μs	
Forced stop command		t_{FD}	—	—	32	—	—	20	μs	
Data hold time*2		t_{DRP}	10*2 *3	—	—	10*2 *3	—	—	Years	
			30*2 *3	—	—	30*2 *3	—	—		Ta = +85°C

Note 1. This is the minimum number of times to guarantee all the characteristics after reprogramming. The guaranteed range is from 1 to the minimum value.
Note 2. This indicates the minimum value of the characteristic when reprogramming is performed within the specified range.
Note 3. This result is obtained from reliability testing.
Note 4. The reprogram/erase cycle is the number of erasures for each block. When the reprogram/erase cycle is n times (n = 10,000), erasing can be performed n times for each block. For example, when 128-byte programming is performed 64 times for different addresses in 8-KB blocks, and then the entire block is erased, the reprogram/erase cycle is counted as one. However, programming the same address several times as one erasure is not enabled. Overwriting is prohibited.
Note 5. Time for resumption includes time for reapplying the erasing pulse (up to one full pulse) that was cut off at the time of suspension.
Note 6. The reference value at VCC = 3.3V and room temperature.

Downloaded from Arrow.com.

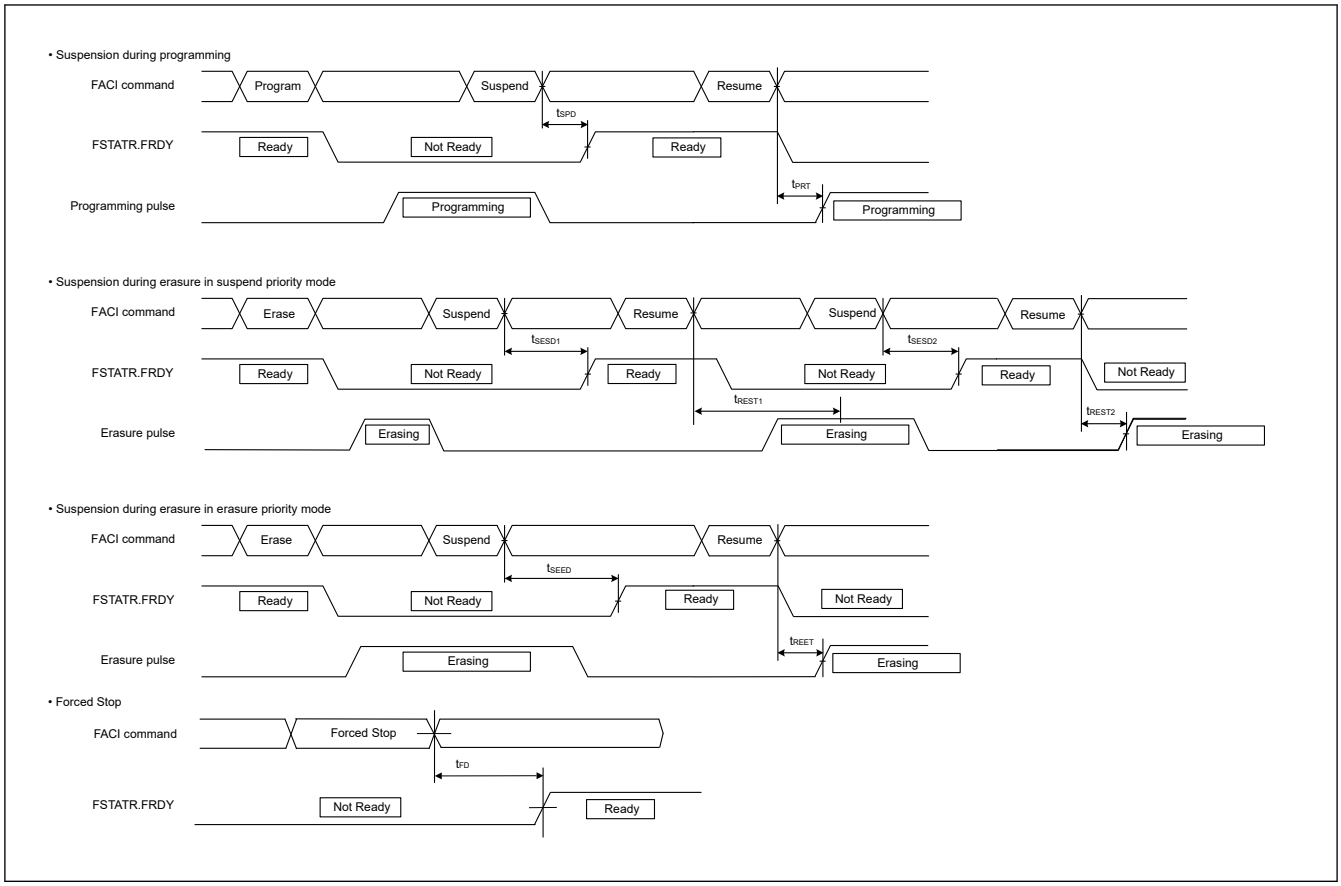

Figure 2.87 Suspension and forced stop timing for flash memory programming and erasure

2.12.2 Data Flash Memory Characteristics

Table 2.51 Data flash memory characteristics (1 of 2)

Conditions: Program or erase: FCLK = 4 to 50 MHz
Read: FCLK ≤ 50 MHz

Parameter		Symbol	FCLK = 4 MHz			20 MHz ≤ FCLK ≤ 50 MHz			Unit	Test conditions
			Min	Typ*6	Max	Min	Typ*6	Max		
Programming time	4-byte	t_{DP4}	—	0.36	3.8	—	0.16	1.7	ms	
	8-byte	t_{DP8}	—	0.38	4.0	—	0.17	1.8		
	16-byte	t_{DP16}	—	0.42	4.5	—	0.19	2.0		
Erasure time	64-byte	t_{DE64}	—	3.1	18	—	1.7	10	ms	
	128-byte	t_{DE128}	—	4.7	27	—	2.6	15		
	256-byte	t_{DE256}	—	8.9	50	—	4.9	28		
Blank check time	4-byte	t_{DBC4}	—	—	84	—	—	30	μs	
Reprogramming/erasure cycle*1		N_{DPEC}	125000*2	—	—	125000*2	—	—	—	
Suspend delay during programming	4-byte	t_{DSPD}	—	—	264	—	—	120	μs	
	8-byte		—	—	264	—	—	120		
	16-byte		—	—	264	—	—	120		
Programming resume time		t_{DPRT}	—	—	110	—	—	50	μs	
First suspend delay during erasure in suspend priority mode	64-byte	t_{DSESD1}	—	—	216	—	—	120	μs	
	128-byte		—	—	216	—	—	120		
	256-byte		—	—	216	—	—	120		

Downloaded from Arrow.com.

Table 2.51 Data flash memory characteristics (2 of 2)

Conditions: Program or erase: FCLK = 4 to 50 MHz
Read: FCLK ≤ 50 MHz

Parameter		Symbol	FCLK = 4 MHz			20 MHz ≤ FCLK ≤ 50 MHz			Unit	Test conditions
			Min	Typ*6	Max	Min	Typ*6	Max		
Second suspend delay during erasure in suspend priority mode	64-byte	t_{DSESD2}	—	—	300	—	—	300	μs	
	128-byte		—	—	390	—	—	390		
	256-byte		—	—	570	—	—	570		
Suspend delay during erasing in erasure priority mode	64-byte	t_{DSEED}	—	—	300	—	—	300	μs	
	128-byte		—	—	390	—	—	390		
	256-byte		—	—	570	—	—	570		
First erasing resume time during erasure in suspend priority mode*5		t_{DREST1}	—	—	300	—	—	300	μs	
Second erasing resume time during erasure in suspend priority mode		t_{DREST2}	—	—	126	—	—	70	μs	
Erasing resume time during erasure in erasure priority mode		t_{DREET}	—	—	126	—	—	70	μs	
Forced stop command		t_{FD}	—	—	32	—	—	20	μs	
Data hold time*3		t_{DRP}	10*3 *4	—	—	10*3 *4	—	—	Year	
			30*3 *4	—	—	30*3 *4	—	—		Ta = +85°C

Note 1. The reprogram/erase cycle is the number of erasures for each block. When the reprogram/erase cycle is n times (n = 125,000), erasing can be performed n times for each block. For example, when 4-byte programming is performed 16 times for different addresses in 64-byte blocks, and then the entire block is erased, the reprogram/erase cycle is counted as one. However, programming the same address several times as one erasure is not enabled. Overwriting is prohibited.
Note 2. This is the minimum number of times to guarantee all the characteristics after reprogramming. The guaranteed range is from 1 to the minimum value.
Note 3. This indicates the minimum value of the characteristic when reprogramming is performed within the specified range.
Note 4. This result is obtained from reliability testing.
Note 5. Time for resumption includes time for reapplying the erasing pulse (up to one full pulse) that was cut off at the time of suspension.
Note 6. The reference value at VCC = 3.3 V and room temperature.

2.12.3 Option Setting Memory Characteristics

Table 2.52 Option setting memory characteristics

Conditions: Program: FCLK = 4 to 50 MHz
Read: FCLK ≤ 50 MHz

Parameter	Symbol	FCLK = 4 MHz			20 MHz ≤ FCLK ≤ 50 MHz			Unit	Test conditions
		Min	Typ*4	Max	Min	Typ*4	Max		
Programming time N_{OPC} ≤ 100 times	t_{OP}	—	83	309	—	45	162	ms	
Programming time N_{OPC} > 100 times	t_{OP}	—	100	371	—	55	195	ms	
Reprogramming cycle	N_{OPC}	20000*1	—	—	20000*1	—	—	Times	
Data hold time*2	t_{DRP}	10*2 *3	—	—	10*2 *3	—	—	Years	
		30*2 *3	—	—	30*2 *3	—	—		Ta = +85°C

Note 1. This is the minimum number of times to guarantee all the characteristics after reprogramming. The guaranteed range is from 1 to the minimum value.
Note 2. This indicates the minimum value of the characteristic when reprogramming is performed within the specified range.
Note 3. This result is obtained from reliability testing.
Note 4. The reference value at VCC = 3.3 V and room temperature.

Downloaded from Arrow.com.

2.13 Boundary Scan

Table 2.53 Boundary scan characteristics

Parameter	Symbol	Min	Typ	Max	Unit	Test conditions
TCK clock cycle time	t_{TCKcyc}	100	—	—	ns	Figure 2.88
TCK clock high pulse width	t_{TCKH}	45	—	—	ns	
TCK clock low pulse width	t_{TCKL}	45	—	—	ns	
TCK clock rise time	t_{TCKr}	—	—	5	ns	
TCK clock fall time	t_{TCKf}	—	—	5	ns	
TMS setup time	t_{TMSS}	20	—	—	ns	Figure 2.89
TMS hold time	t_{TMSH}	20	—	—	ns	
TDI setup time	t_{TDIS}	20	—	—	ns	
TDI hold time	t_{TDIH}	20	—	—	ns	
TDO data delay	t_{TDOD}	—	—	40	ns	
Boundary scan circuit startup time*1	T_{BSSTUP}	t_{RESWP}	—	—	—	Figure 2.90

Note 1. Boundary scan does not function until the power-on reset becomes negative.

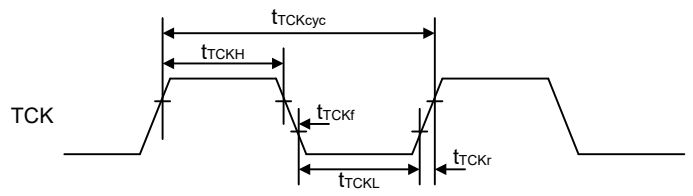

Figure 2.88 Boundary scan TCK timing

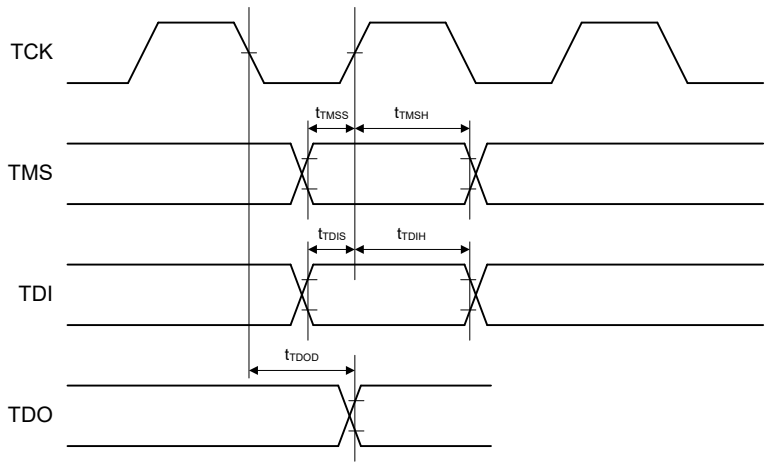

Figure 2.89 Boundary scan input/output timing

Downloaded from Arrow.com.

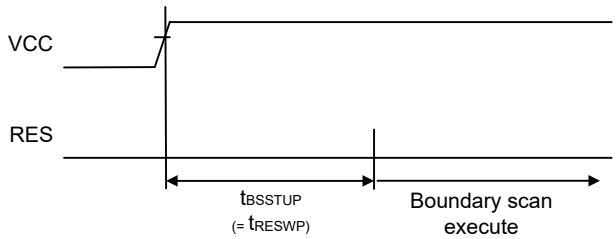

Figure 2.90 Boundary scan circuit startup timing

2.14 Joint Test Action Group (JTAG)

Table 2.54 JTAG

Parameter	Symbol	Min	Typ	Max	Unit	Test conditions
TCK clock cycle time	t_{TCKcyc}	40	—	—	ns	Figure 2.91
TCK clock high pulse width	t_{TCKH}	15	—	—	ns	
TCK clock low pulse width	t_{TCKL}	15	—	—	ns	
TCK clock rise time	t_{TCKr}	—	—	5	ns	
TCK clock fall time	t_{TCKf}	—	—	5	ns	
TMS setup time	t_{TMSS}	8	—	—	ns	Figure 2.92
TMS hold time	t_{TMSH}	8	—	—	ns	
TDI setup time	t_{TDIS}	8	—	—	ns	
TDI hold time	t_{TDIH}	8	—	—	ns	
TDO data delay time	t_{TDOD}	—	—	20	ns	

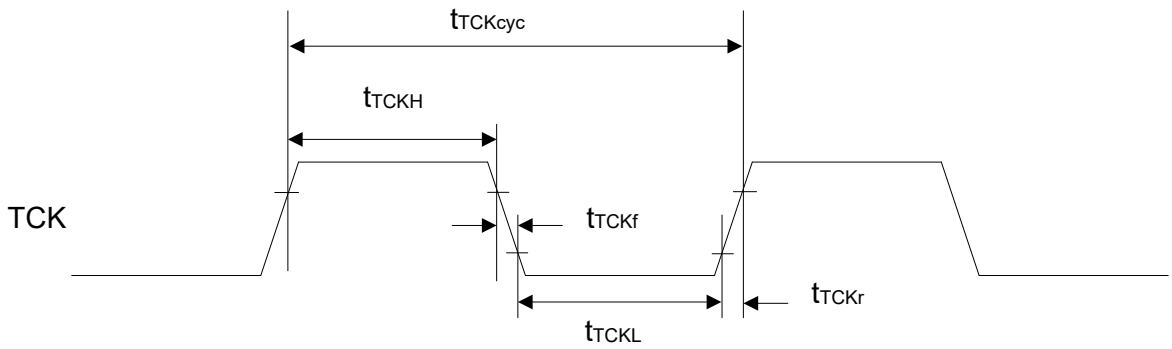

Figure 2.91 JTAG TCK timing

Downloaded from Arrow.com.

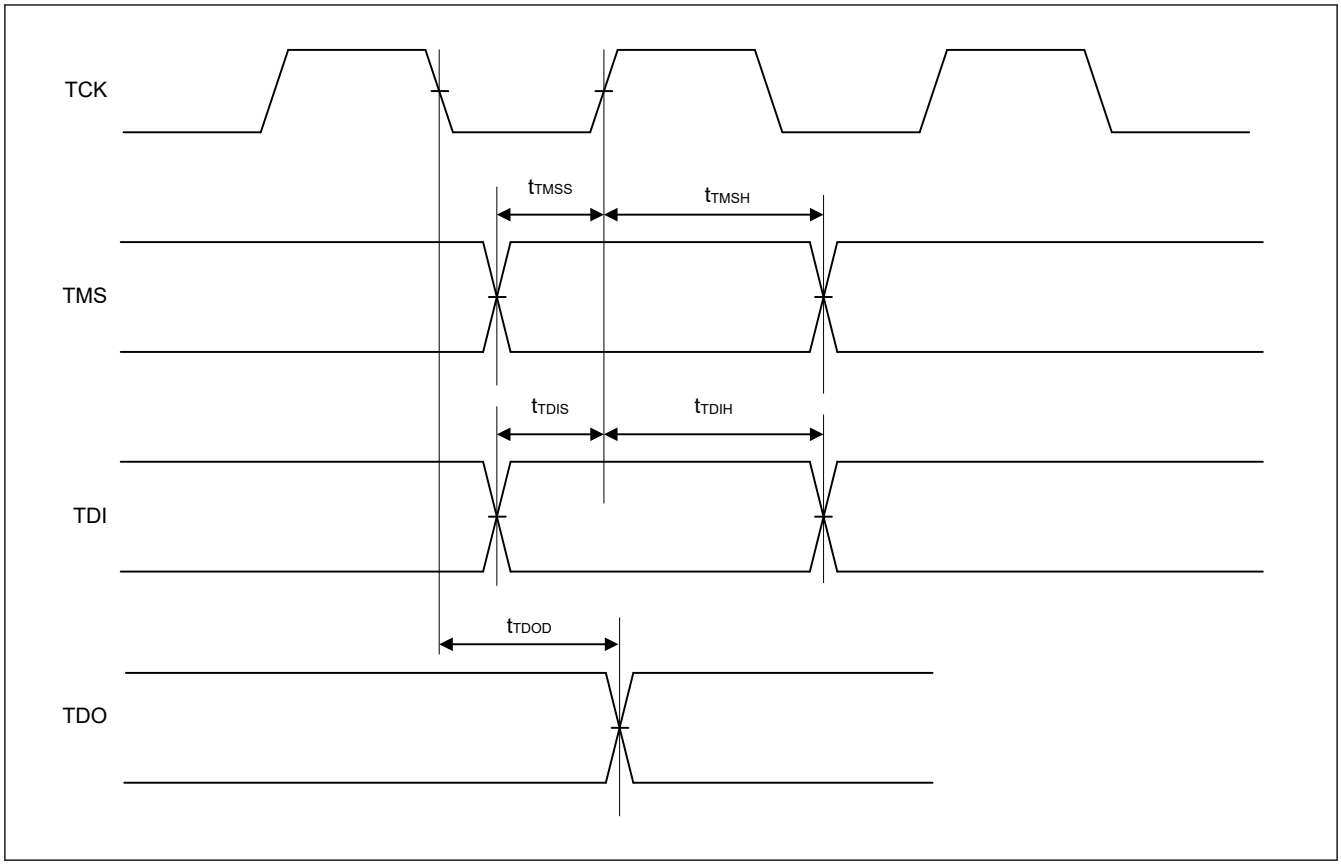

Figure 2.92 JTAG input/output timing

2.15 Serial Wire Debug (SWD)

Table 2.55 SWD

Parameter	Symbol	Min	Typ	Max	Unit	Test conditions
SWCLK clock cycle time	$t_{SWCKcyc}$	40	—	—	ns	Figure 2.93
SWCLK clock high pulse width	t_{SWCKH}	15	—	—	ns	
SWCLK clock low pulse width	t_{SWCKL}	15	—	—	ns	
SWCLK clock rise time	t_{SWCKr}	—	—	5	ns	
SWCLK clock fall time	t_{SWCKf}	—	—	5	ns	
SWDIO setup time	t_{SWDS}	8	—	—	ns	Figure 2.94
SWDIO hold time	t_{SWDH}	8	—	—	ns	
SWDIO data delay time	t_{SWDD}	2	—	28	ns	

Downloaded from Arrow.com.

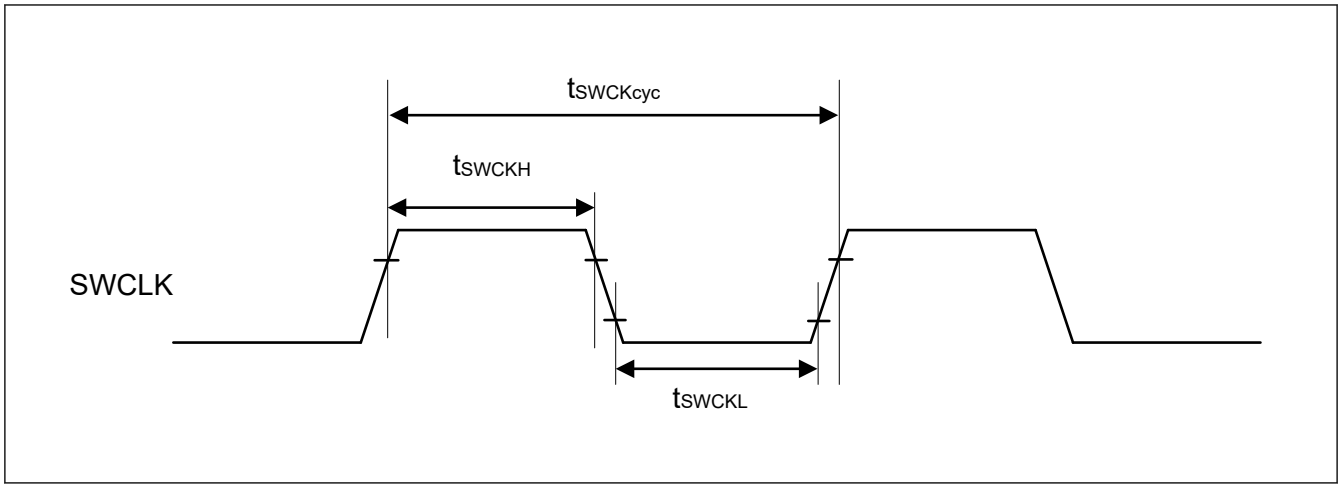

Figure 2.93 SWD SWCLK timing

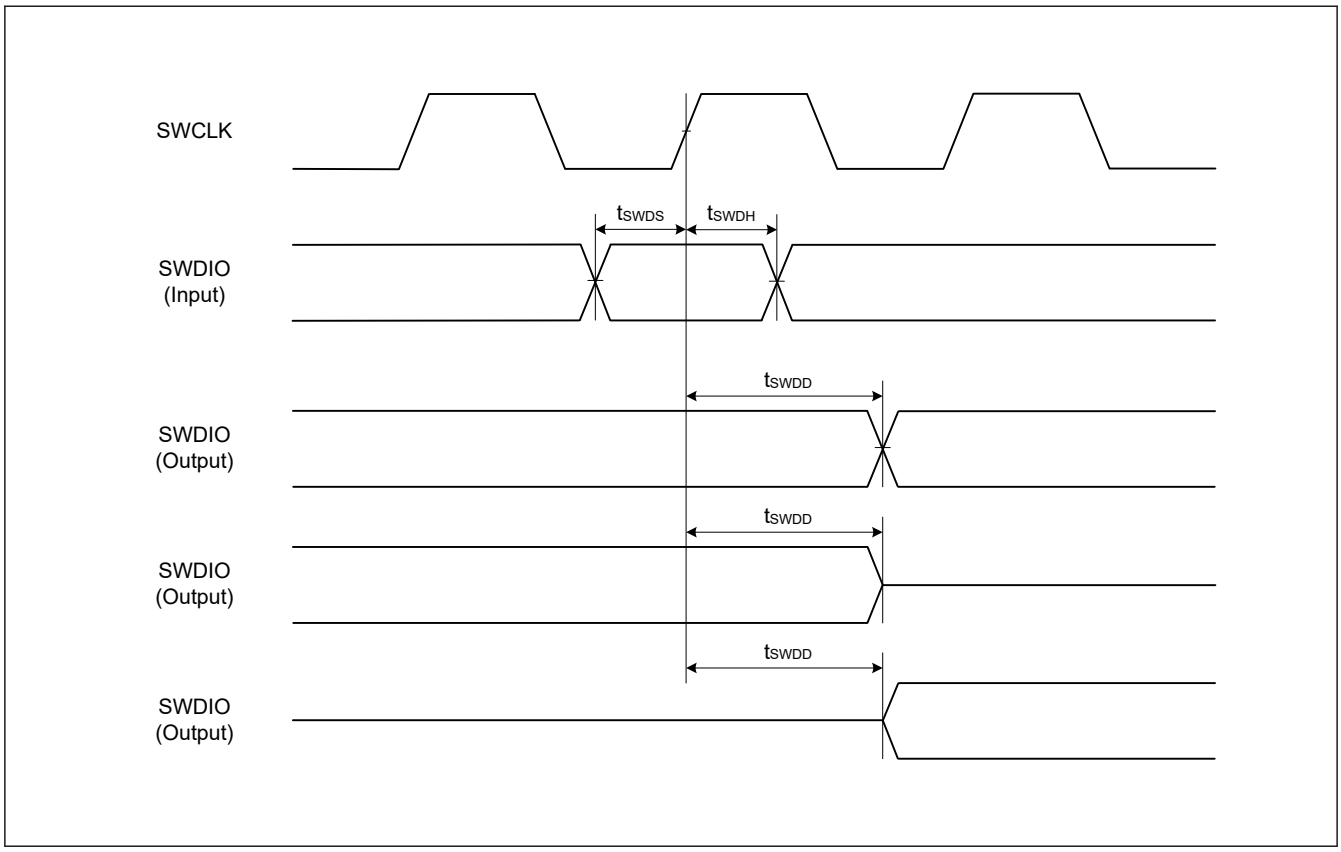

Figure 2.94 SWD input/output timing

2.16 Embedded Trace Macro Interface (ETM)

Table 2.56 ETM (1 of 2)

Conditions: High speed high drive output is selected in the Port Drive Capability bit in the PmnPFS register.

Parameter	Symbol	Min	Typ	Max	Unit	Test conditions
TCLK clock cycle time	$t_{TCLKcyc}$	20	—	—	ns	Figure 2.95
TCLK clock high pulse width	t_{TCLKH}	9	—	—	ns	
TCLK clock low pulse width	t_{TCLKL}	9	—	—	ns	
TCLK clock rise time	t_{TCLKr}	—	—	1	ns	
TCLK clock fall time	t_{TCLKf}	—	—	1	ns	

Downloaded from Arrow.com.

Table 2.56 ETM (2 of 2)

Conditions: High speed high drive output is selected in the Port Drive Capability bit in the PmnPFS register.

Parameter	Symbol	Min	Typ	Max	Unit	Test conditions
TDATA[3:0] output setup time	t_{TRDS}	2.5	—	—	ns	Figure 2.96
TDATA[3:0] output hold time	t_{TRDH}	1.5	—	—	ns	

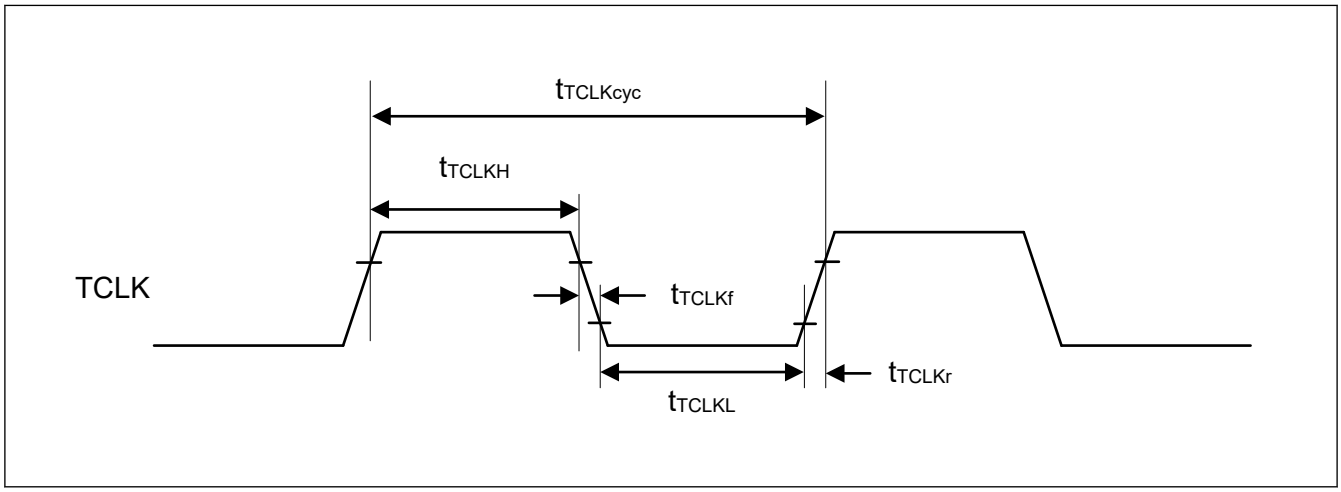

Figure 2.95 ETM TCLK timing

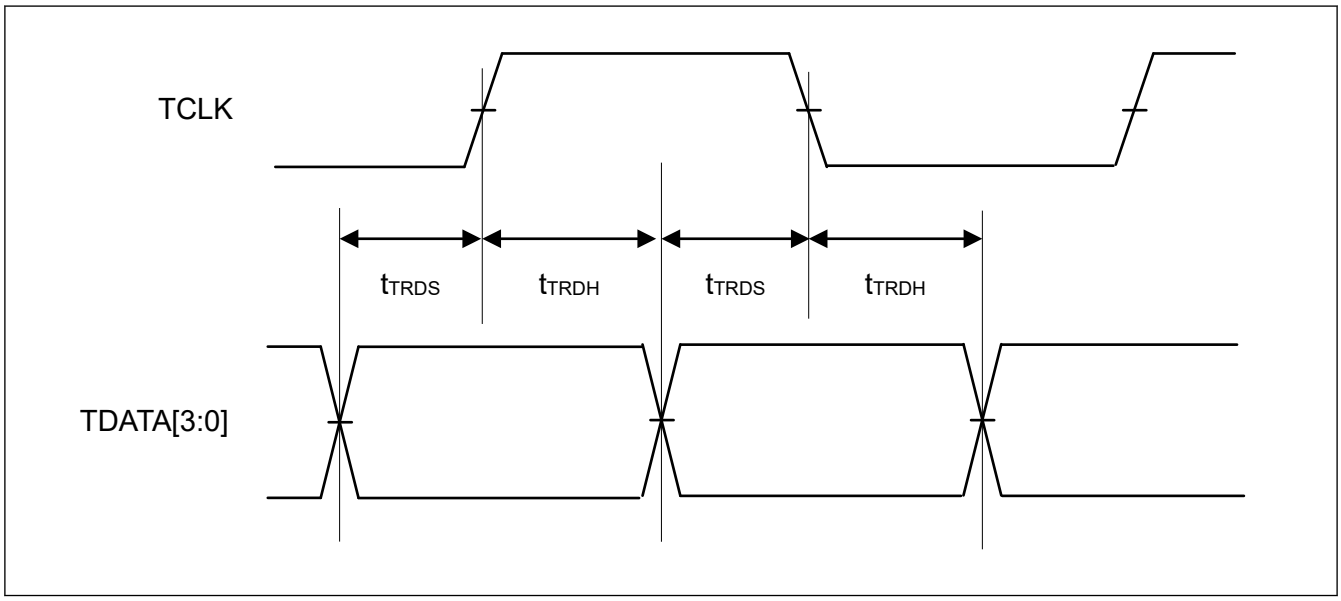

Figure 2.96 ETM output timing

Downloaded from Arrow.com.

Appendix 1. Port States in Each Processing Mode

Function	Pin function	Reset	Software Standby mode		Deep Software Standby mode	After Deep Software Standby mode is canceled (return to startup mode)	
			OPE = 0	OPE = 1		IOKEEP = 0	IOKEEP = 1*1
Mode	MD	Pull-up	Keep-O		Keep	Hi-Z	Keep
JTAG	TCK/TMS/TDI	Pull-up	Keep-O		Keep	Hi-Z	Keep
	TDO	output	Keep-O		Keep	TDO output	Keep
IRQ	IRQx	Hi-Z	Keep-O*2		Keep	Hi-Z	Keep
	IRQx-DS	Hi-Z	Keep-O*2		Keep*3	Hi-Z	Keep
AGT	AGTIOn	Hi-Z	Keep-O*2		Keep	Hi-Z	Keep
	AGTIOn (n=1,3)	Hi-Z	Keep-O*2		Keep*3	Hi-Z	Keep
SCI	RXD0	Hi-Z	Keep-O*2		Keep	Hi-Z	Keep
IIC	SCLn/SDAn	Hi-Z	Keep-O*2		Keep	Hi-Z	Keep
USBFS	USB_OVRCURx	Hi-Z	Keep-O*2		Keep	Hi-Z	Keep
	USB_OVRCURx-DS/ USB_VBUS	Hi-Z	Keep-O*2		Keep*3	Hi-Z	Keep
	USB_DP/USB_DM	Hi-Z	Keep-O*4		Keep*3	Hi-Z	Keep
RTC	RTCICx	Hi-Z	Keep-O*2		Keep*3	Hi-Z	Keep
	RTCOUT	Hi-Z	[RTCOUT selected] RTCOUT output		Keep	Hi-Z	Keep
CLKOUT	CLKOUT	Hi-Z	[CLKOUT selected] CLKOUT output		Keep	Hi-Z	Keep
DAC	DAn	Hi-Z	[DAn output (DAOE = 1)] D/A output retained		Keep	Hi-Z	Keep
External bus (CS area)	EBCLK	Hi-Z	[EBCLK output] H		Keep	Hi-Z	Keep
	Dx	Hi-Z	[Dx output] Hi-Z		Keep	Hi-Z	Keep
	Ax	Hi-Z	[Ax output] Hi-Z	[Ax output] Keep-O	Keep	Hi-Z	Keep
	BCx/CSx/RD/WRx	Hi-Z	[BCx/CSx/RD/WRx output] Hi-Z	[BCx/CSx/RD/WRx output] H	Keep	Hi-Z	Keep
	ALE	Hi-Z	[ALE output] Hi-Z	[ALE output] L	Keep	Hi-Z	Keep
Others	—	Hi-Z	Keep-O		Keep	Hi-Z	Keep

Note: H: High-level
L: Low-level
Hi-Z: High-impedance
Keep-O: Output pins retain their previous values. Input pins go to high-impedance.
Keep: Pin states are retained during periods in Software Standby mode.

Note 1. Retains the I/O port state until the DPSBYCR.IOKEEP bit is cleared to 0.
Note 2. Input is enabled if the pin is specified as the Software Standby canceling source while it is used as an external interrupt pin.
Note 3. Input is enabled if the pin is specified as the Deep Software Standby canceling source.
Note 4. Input is enabled while the pin is used as an input pin.

Downloaded from Arrow.com.

Appendix 2. Package Dimensions

Information on the latest version of the package dimensions or mountings is displayed in “Packages” on the Renesas Electronics Corporation website.

JEITA Package Code	RENESAS Code	Previous Code	MASS (Typ) [g]
P-LFQFP144-20x20-0.50	PLQP0144KA-B	—	1.2

Unit: mm

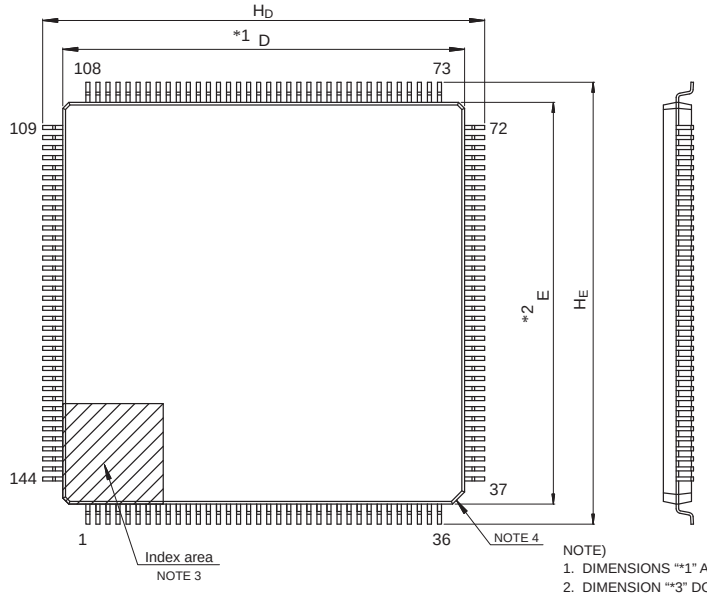

NOTE)
1. DIMENSIONS “*1” AND “*2” DO NOT INCLUDE MOLD FLASH.
2. DIMENSION “*3” DOES NOT INCLUDE TRIM OFFSET.
3. PIN 1 VISUAL INDEX FEATURE MAY VARY, BUT MUST BE LOCATED WITHIN THE HATCHED AREA.
4. CHAMFERS AT CORNERS ARE OPTIONAL, SIZE MAY VARY.

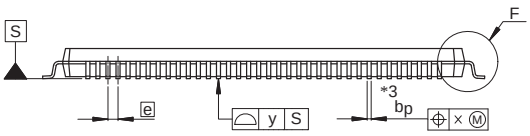

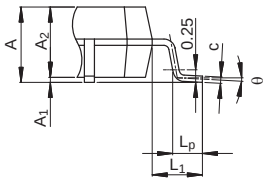

Detail F

Reference Symbol	Dimensions in millimeters		
	Min	Nom	Max
D	19.9	20.0	20.1
E	19.9	20.0	20.1
A_2	—	1.4	—
H_D	21.8	22.0	22.2
H_E	21.8	22.0	22.2
A	—	—	1.7
A_1	0.05	—	0.15
b_p	0.17	0.20	0.27
c	0.09	—	0.20
θ	0°	3.5°	8°
e	—	0.5	—
x	—	—	0.08
y	—	—	0.08
L_p	0.45	0.6	0.75
L_1	—	1.0	—

© 2016 Renesas Electronics Corporation. All rights reserved.

Figure A2.1 LQFP 144-pin

Downloaded from Arrow.com.

JEITA Package Code	RENESAS Code	Previous Code	MASS (Typ) [g]
P-LFQFP100-14x14-0.50	PLQP0100KB-B	—	0.6

Unit: mm

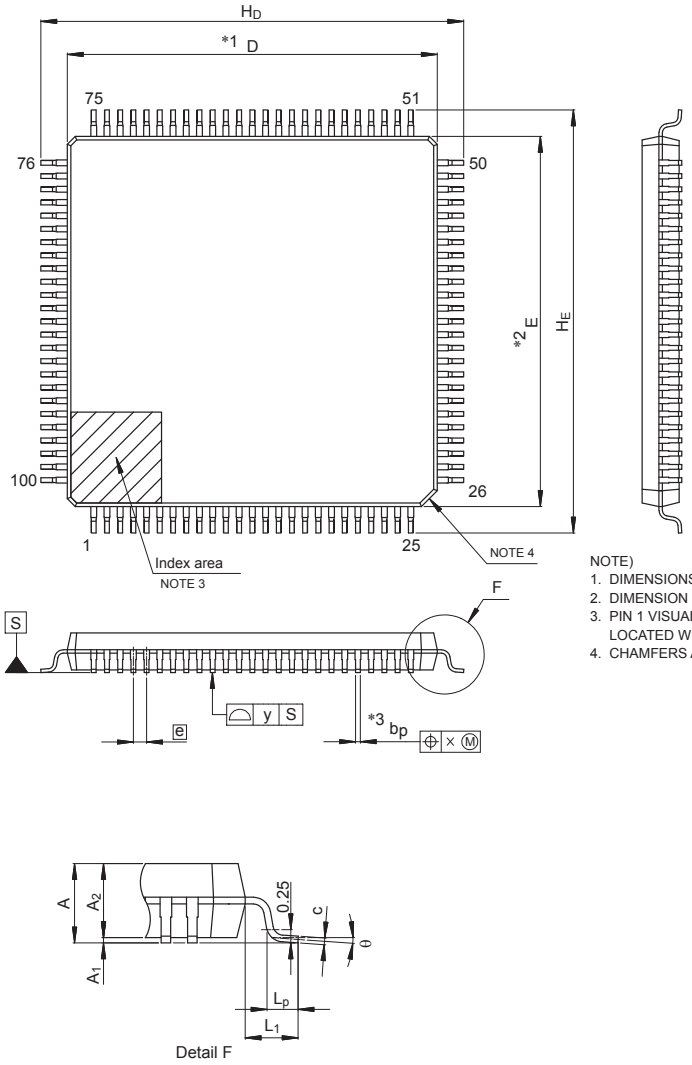

NOTE)
1. DIMENSIONS "*1" AND "*2" DO NOT INCLUDE MOLD FLASH.
2. DIMENSION "*3" DOES NOT INCLUDE TRIM OFFSET.
3. PIN 1 VISUAL INDEX FEATURE MAY VARY, BUT MUST BE LOCATED WITHIN THE HATCHED AREA.
4. CHAMFERS AT CORNERS ARE OPTIONAL, SIZE MAY VARY.

Reference Symbol	Dimensions in millimeters		
	Min	Nom	Max
D	13.9	14.0	14.1
E	13.9	14.0	14.1
A_2	—	1.4	—
H_D	15.8	16.0	16.2
H_E	15.8	16.0	16.2
A	—	—	1.7
A_1	0.05	—	0.15
b_p	0.15	0.20	0.27
c	0.09	—	0.20
θ	0°	3.5°	8°
e	—	0.5	—
x	—	—	0.08
y	—	—	0.08
L_p	0.45	0.6	0.75
L_1	—	1.0	—

© 2015 Renesas Electronics Corporation. All rights reserved.

Figure A2.2 LQFP 100-pin

Downloaded from Arrow.com.

JEITA Package Code	RENESAS Code	Previous Code	MASS (Typ) [g]
P-LFQFP64-10x10-0.50	PLQP0064KB-C	—	0.3

Unit: mm

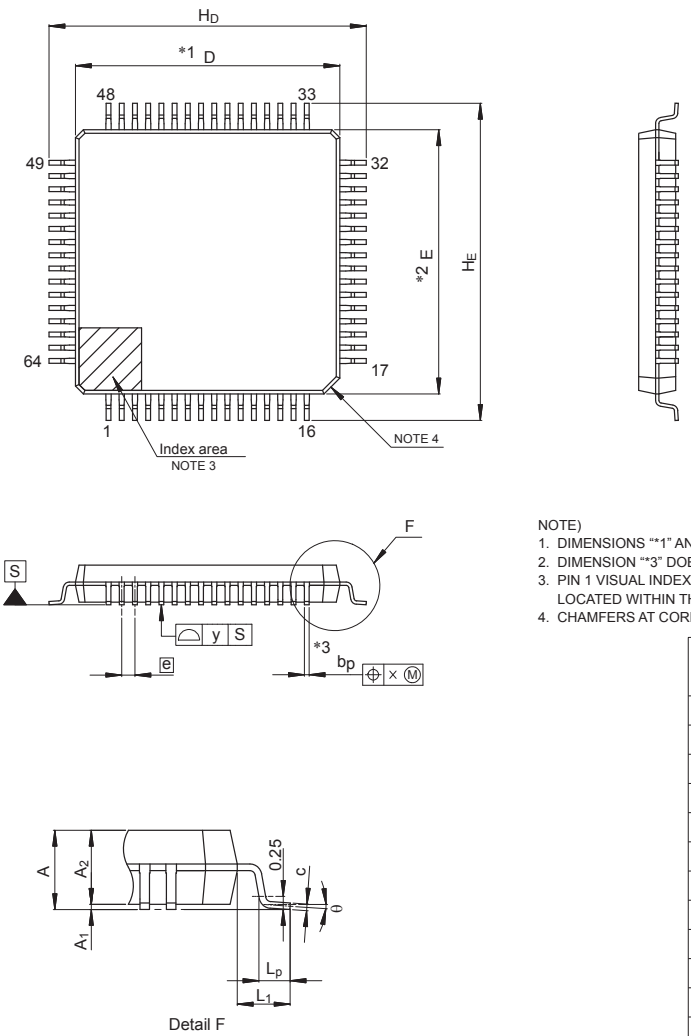

NOTE)
1. DIMENSIONS "*1" AND "*2" DO NOT INCLUDE MOLD FLASH.
2. DIMENSION "*3" DOES NOT INCLUDE TRIM OFFSET.
3. PIN 1 VISUAL INDEX FEATURE MAY VARY, BUT MUST BE LOCATED WITHIN THE HATCHED AREA.
4. CHAMFERS AT CORNERS ARE OPTIONAL, SIZE MAY VARY.

Reference Symbol	Dimensions in millimeters		
	Min	Nom	Max
D	9.9	10.0	10.1
E	9.9	10.0	10.1
A_2	—	1.4	—
H_D	11.8	12.0	12.2
H_E	11.8	12.0	12.2
A	—	—	1.7
A_1	0.05	—	0.15
b_p	0.15	0.20	0.27
c	0.09	—	0.20
θ	0°	3.5°	8°
e	—	0.5	—
x	—	—	0.08
y	—	—	0.08
L_p	0.45	0.6	0.75
L_1	—	1.0	—

© 2015 Renesas Electronics Corporation. All rights reserved.

Figure A2.3 LQFP 64-pin

Downloaded from Arrow.com.

JEITA Package code	RENESAS code	MASS(TYP.)[g]
P-LFBGA64-6x6-0.65	PLBG0064JC-A	0.11

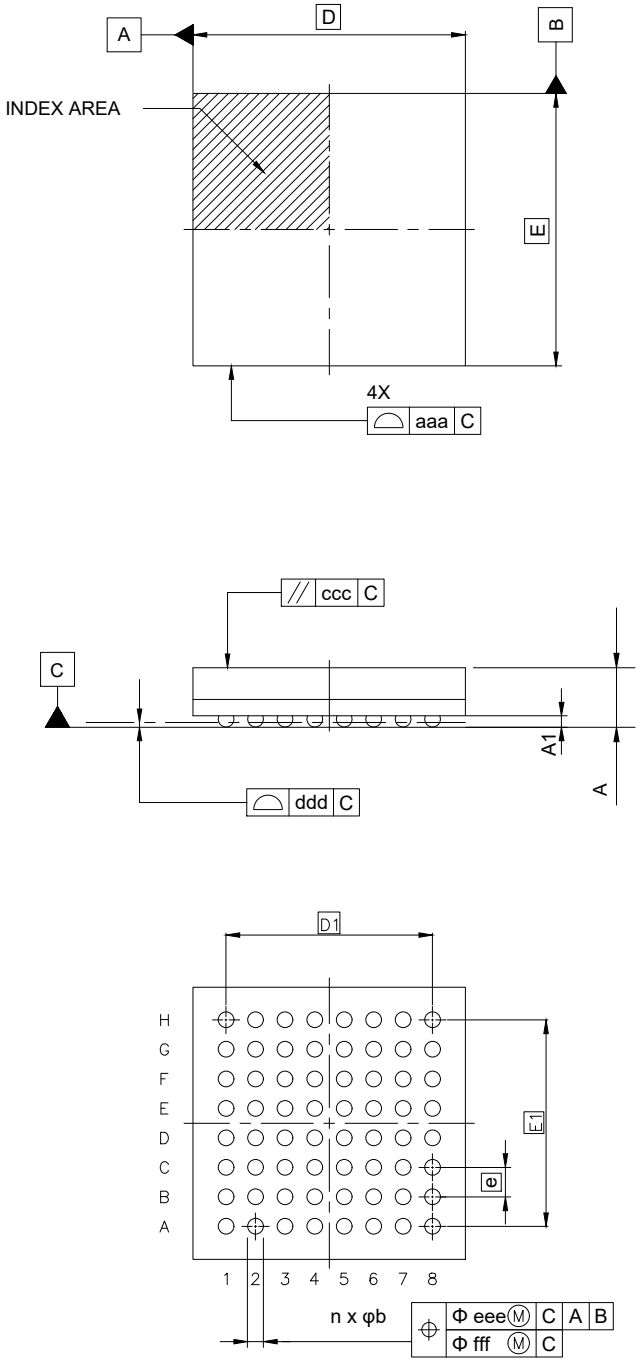

Reference Symbol	Dimension in Millimeters		
	Min.	Nom.	Max.
D	—	6.00	—
E	—	6.00	—
D1	—	4.55	—
E1	—	4.55	—
A	—	—	1.38
A1	0.20	—	—
b	0.30	0.35	0.40
e	—	0.65	—
aaa	—	—	0.15
ccc	—	—	0.10
ddd	—	—	0.10
eee	—	—	0.15
fff	—	—	0.08
n	—	64	—

Figure A2.4 BGA 64-pin

Downloaded from Arrow.com.

JEITA Package code	RENESAS code	MASS(TYP.)[g]
P-LFBGA144-7x7-0.50	PLBG0144KB-A	0.13

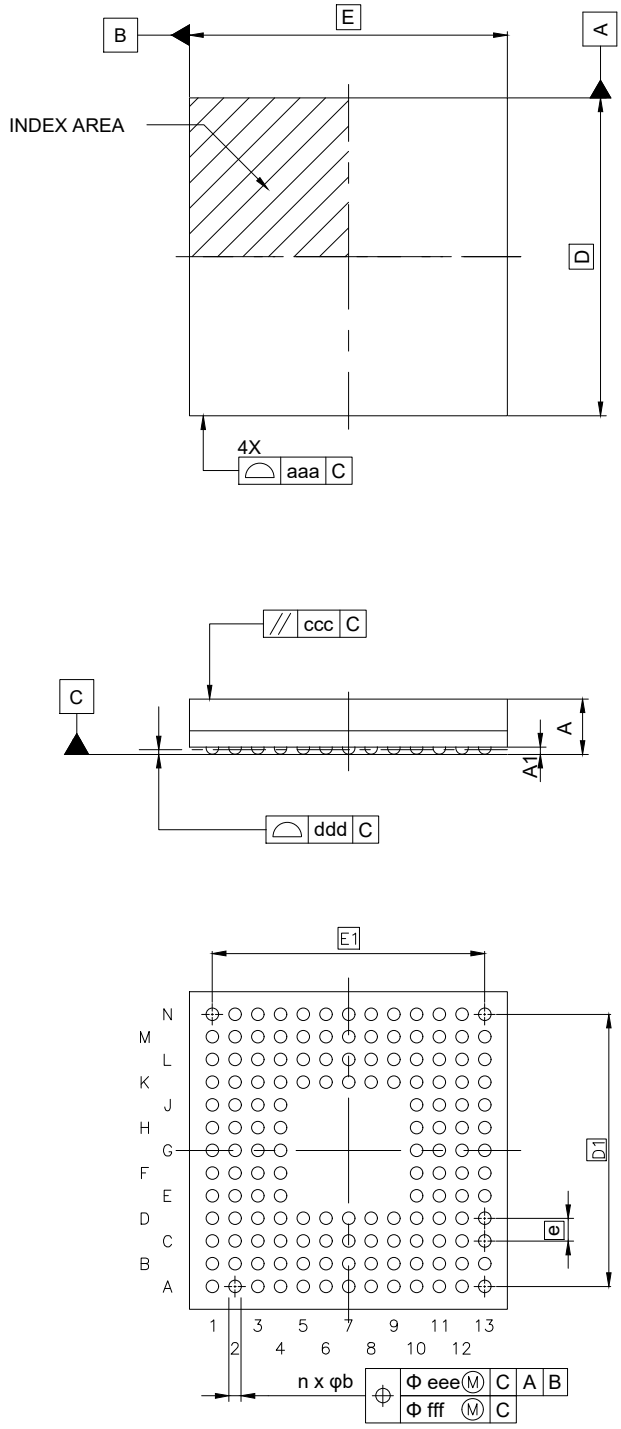

Reference Symbol	Dimension in Millimeters		
	Min.	Nom.	Max.
D	—	7.00	—
E	—	7.00	—
D1	—	6.00	—
E1	—	6.00	—
A	—	—	1.29
A1	0.11	—	—
b	0.22	0.27	0.32
e	—	0.50	—
aaa	—	—	0.15
ccc	—	—	0.10
ddd	—	—	0.08
eee	—	—	0.15
fff	—	—	0.05
n	—	144	—

Figure A2.5 BGA 144-pin

Downloaded from Arrow.com.

Appendix 3. I/O Registers

This appendix describes I/O register address and access cycles by function.

3.1 Peripheral Base Addresses

This section provides the base addresses for peripherals described in this manual. Table A3.1 shows the name, description, and the base address of each peripheral.

Table A3.1 Peripheral base address (1 of 3)

Name	Description	Base address
RMPU	Renesas Memory Protection Unit	0x4000_0000
TZF	TrustZone Filter	0x4000_0E00
SRAM	SRAM Control	0x4000_2000
BUS	BUS Control	0x4000_3000
DMAC0	Direct memory access controller 0	0x4000_5000
DMAC1	Direct memory access controller 1	0x4000_5040
DMAC2	Direct memory access controller 2	0x4000_5080
DMAC3	Direct memory access controller 3	0x4000_50C0
DMAC4	Direct memory access controller 4	0x4000_5100
DMAC5	Direct memory access controller 5	0x4000_5140
DMAC6	Direct memory access controller 6	0x4000_5180
DMAC7	Direct memory access controller 7	0x4000_51C0
DMA	DMAC Module Activation	0x4000_5200
DTC	Data Transfer Controller	0x4000_5400
ICU	Interrupt Controller	0x4000_6000
CACHE	CACHE	0x4000_7000
CPSCU	CPU System Security Control Unit	0x4000_8000
DBG	Debug Function	0x400_1B000
FCACHE	Flash Cache	0x400_1C100
SYSC	System Control	0x4001_E000
PORT0	Port 0 Control Registers	0x4008_0000
PORT1	Port 1 Control Registers	0x4008_0020
PORT2	Port 2 Control Registers	0x4008_0040
PORT3	Port 3 Control Registers	0x4008_0060
PORT4	Port 4 Control Registers	0x4008_0080
PORT5	Port 5 Control Registers	0x4008_00A0
PORT6	Port 6 Control Registers	0x4008_00C0
PORT7	Port 7 Control Registers	0x4008_00E0
PORT8	Port 8 Control Registers	0x4008_0100
PFS	Pmn Pin Function Control Register	0x4008_0800
ELC	Event Link Controller	0x4008_2000
RTC	Realtime Clock	0x4008_3000
IWDT	Independent Watchdog Timer	0x4008_3200
WDT	Watchdog Timer	0x4008_3400
CAC	Clock Frequency Accuracy Measurement Circuit	0x4008_3600

Downloaded from Arrow.com.

Table A3.1 Peripheral base address (2 of 3)

Name	Description	Base address
MSTP	Module Stop Control A, B, C, D	0x4008_4000
POEG	Port Output Enable Module for GPT	0x4008_A000
USBFS	USB 2.0 FS Module	0x4009_0000
SDHI0	SD Host Interface 0	0x4009_2000
SSIE0	Serial Sound Interface Enhanced (SSIE)	0x4009_D000
IIC0	Inter-Integrated Circuit 0	0x4009_F000
IIC0WU	Inter-Integrated Circuit 0 Wake-up Unit	0x4009_F014
IIC1	Inter-Integrated Circuit 1	0x4009_F100
OSPI	Octa Serial Peripheral Interface	0x400A_6000
CAN0	CAN0 Module	0x400A_8000
CAN1	CAN1 Module	0x400A_9000
CTSU	Capacitive Touch Sensing Unit	0x400D_0000
PSCU	Peripheral Security Control Unit	0x400E_0000
AGT0	Low Power Asynchronous General Purpose Timer 0	0x400E_8000
AGT1	Low Power Asynchronous General Purpose Timer 1	0x400E_8100
AGT2	Low Power Asynchronous General Purpose Timer 2	0x400E_8200
AGT3	Low Power Asynchronous General Purpose Timer 3	0x400E_8300
AGT4	Low Power Asynchronous General Purpose Timer 4	0x400E_8400
AGT5	Low Power Asynchronous General Purpose Timer 5	0x400E_8500
TSN	Temperature Sensor	0x400F_3000
CRC	CRC Calculator	0x4010_8000
DOC	Data Operation Circuit	0x4010_9000
EDMAC0	DMA Controller for the Ethernet Controller Channel 0	0x4011_4000
ETHERC0	Ethernet Controller Channel 0	0x4011_4100
SCI0	Serial Communication Interface 0	0x4011_8000
SCI1	Serial Communication Interface 1	0x4011_8100
SCI2	Serial Communication Interface 2	0x4011_8200
SCI3	Serial Communication Interface 3	0x4011_8300
SCI4	Serial Communication Interface 4	0x4011_8400
SCI5	Serial Communication Interface 5	0x4011_8500
SCI6	Serial Communication Interface 6	0x4011_8600
SCI7	Serial Communication Interface 7	0x4011_8700
SCI8	Serial Communication Interface 8	0x4011_8800
SCI9	Serial Communication Interface 9	0x4011_8900
SPI0	Serial Peripheral Interface 0	0x4011_A000
SPI1	Serial Peripheral Interface 1	0x4011_A100
SCE9	Secure Cryptographic Engine	0x4016_1000
GPT320	General PWM 32-Bit Timer 0	0x4016_9000
GPT321	General PWM 32-Bit Timer 1	0x4016_9100
GPT322	General PWM 32-Bit Timer 2	0x4016_9200
GPT323	General PWM 32-Bit Timer 3	0x4016_9300
GPT164	General PWM 16-Bit Timer 4	0x4016_9400

Downloaded from Arrow.com.

Table A3.1 Peripheral base address (3 of 3)

Name	Description	Base address
GPT165	General PWM 16-Bit Timer 5	0x4016_9500
GPT166	General PWM 16-Bit Timer 6	0x4016_9600
GPT167	General PWM 16-Bit Timer 7	0x4016_9700
GPT168	General PWM 16-Bit Timer 8	0x4016_9800
GPT169	General PWM 16-Bit Timer 9	0x4016_9900
GPT_OPS	Output Phase Switching Controller	0x4016_9A00
ADC120	12bit A/D Converter 0	0x4017_0000
ADC121	12bit A/D Converter 1	0x4017_0200
DAC12	12-bit D/A converter	0x4017_1000
FLAD	Data Flash	0x407F_C000
FACI	Flash Application Command Interface	0x407F_E000
QSPI	Quad-SPI	0x6400_0000

Note: Name = Peripheral name
Description = Peripheral functionality
Base address = Lowest reserved address or address used by the peripheral

3.2 Access Cycles

This section provides access cycle information for the I/O registers described in this manual.

- Registers are grouped by associated module.
- The number of access cycles indicates the number of cycles based on the specified reference clock.
- In the internal I/O area, reserved addresses that are not allocated to registers must not be accessed, otherwise operations cannot be guaranteed.
- The number of I/O access cycles depends on bus cycles of the internal peripheral bus, divided clock synchronization cycles, and wait cycles of each module. Divided clock synchronization cycles differ depending on the frequency ratio between ICLK and PCLK.
- When the frequency of ICLK is equal to that of PCLK, the number of divided clock synchronization cycles is always constant.
- When the frequency of ICLK is greater than that of PCLK, at least 1 PCLK cycle is added to the number of divided clock synchronization cycles.
- The number of write access cycles indicates the number of cycles obtained by non-bufferable write access.

Note: This applies to the number of cycles when access from the CPU does not conflict with the instruction fetching to the external memory or bus access from other bus masters such as DTC or DMAC.

Table A3.2 Access cycles (1 of 4)

Peripherals	Address		Number of access cycles					
			ICLK = PCLK		ICLK > PCLK*1		Cycle unit	Related function
	From	To	Read	Write	Read	Write		
RMPU, TZF, SRAM, BUS, DMACn, DMA, DTC, ICU	0x4000_0000	0x4000_6FFF	4	3	4	3	ICLK	Renesas Memory Protection Unit, TrustZone Filter, SRAM Control, BUS Control, Direct Memory Access Controller n, DMAC Module Activation, DTC Control Register, Interrupt Controller
CACHE	0x4000_7000	0x4000_7FFF	3	5	3	5	ICLK	CACHE

Downloaded from Arrow.com.

Table A3.2 Access cycles (2 of 4)

Peripherals	Address		Number of access cycles					
			ICLK = PCLK		ICLK > PCLK*1		Cycle unit	Related function
	From	To	Read	Write	Read	Write		
CPSCU, DBG, FCACHE	0x4000_8000	0x4001_CFFF	4	3	4	3	ICLK	CPU System Security Control Unit, Debug Function, Flash Cache
SYSC	0x4001_E000	0x4001_E3FF	5	4	5	4	ICLK	System Control
SYSC	0x4001_E400	0x4001_E5FF	9	8	5 to 8	5 to 8	PCLKB	System Control
PORTn, PFS	0x4008_0000	0x4008_0FFF	5	4	2 to 5	2 to 4	PCLKB	Port n Control Registers, Pmn Pin Function Control Register
ELC, RTC, IWDT, WDT, CAC	0x4008_2000	0x4008_3FFF	5	4	3 to 5	2 to 4	PCLKB	Event Link Controller, Realtime Clock, Independent Watchdog Timer, Watchdog Timer, Clock Frequency Accuracy Measurement Circuit
MSTP	0x4008_4000	0x4008_4FFF	5	4	2 to 5	2 to 4	PCLKB	Module Stop Control
POEG	0x4008_A000	0x4008_AFFF	5	4	3 to 5	2 to 4	PCLKB	Port Output Enable Module for GPT
USBFS	0x4009_0000	0x4009_03FF	6	5	3 to 6	3 to 5	PCLKB	USB 2.0 FS Module
USBFS	0x4009_0400	0x4009_04FF	4	3	1 to 4	1 to 3	PCLKB	USB 2.0 FS Module
SDHI0, SSIE0, IICn, IIC0WU	0x4009_2000	0x4009_FFFF	5	4	2 to 5	2 to 4	PCLKB	SD Host Interface 0, Serial Sound Interface Enhanced, Inter-Integrated Circuit n, Inter-Integrated Circuit 0 Wake-up Unit
OSPI	0x400A_6000	0x400A_6FFF	15	17	12 to 15	15 to 17	PCLKB	Octa Serial Peripheral Interface
CANn	0x400A_8000	0x400A_9FFF	5	4	2 to 5	2 to 4	PCLKB	CANn Module
CTSU	0x400D_0000	0x400D_FFFF	4	3	1 to 4	1 to 3	PCLKB	Capacitive Touch Sensing Unit
PSCU	0x400E_0000	0x400E_0FFF	5	4	2 to 5	2 to 4	PCLKB	Peripheral Security Control Unit
AGTn	0x400E_8000	0x400E_8FFF	7	4	5 to 7	2 to 4	PCLKB	Low Power Asynchronous General purpose Timer n
TSN	0x400F_3000	0x400F_3FFF	5	4	2 to 5	2 to 4	PCLKB	Temperature Sensor
CRC, DOC	0x4010_8000	0x4010_9FFF	5	4	2 to 5	2 to 4	PCLKA	CRC Calculator, Data Operation Circuit
EDMAC0	0x4011_4000	0x4011_40FF	6	5	3 to 6	3 to 5	PCLKA	DMA Controller for the Ethernet Controller Channel 0
ETHERC0	0x4011_4100	0x4011_4FFF	15	14	12 to 15	12 to 14	PCLKA	Ethernet Controller Channel 0
SCIn	0x4011_8000	0x4011_8FFF	5*2	4*2	2 to 5*2	2 to 4*2	PCLKA	Serial Communication Interface n
SPIn	0x4011_A000	0x4011_AFFF	5*3	4*3	2 to 5*3	2 to 4*3	PCLKA	Serial Peripheral Interface n
SCE9	0x4016_1000	0x4016_1FFF	6	4	3 to 6	2 to 4	PCLKA	Secure Cryptographic Engine
GPT32n, GPT16n, GPT_OPS	0x4016_9000	0x4016_9FFF	7	4	4 to 7	2 to 4	PCLKA	General PWM 32-bit Timer n, General PWM 16-bit Timer n, Output Phase Switching Controller

Downloaded from Arrow.com.

Table A3.2 Access cycles (3 of 4)

Peripherals	Address		Number of access cycles					
			ICLK = PCLK		ICLK > PCLK*1		Cycle unit	Related function
	From	To	Read	Write	Read	Write		
ADC12n, DAC12	0x4017_0000	0x4017_2FFF	5	4	2 to 5	2 to 4	PCLKA	12-bit A/D Converter n, 12-bit D/A converter
QSPI	0x6400_0000	0x6400_000F	5	14 to *4	2 to 5	14 to *4	PCLKA	Quad-SPI
QSPI	0x6400_0010	0x6400_0013	25 to *4	6 to *4	25 to *4	5 to *4	PCLKA	Quad-SPI
QSPI	0x6400_0014	0x6400_0037	5	14 to *4	2 to 5	14 to *4	PCLKA	Quad-SPI
QSPI	0x6400_0804	0x6400_0807	4	3	1 to 4	1 to 3	PCLKA	Quad-SPI

Table A3.2 Access cycles (4 of 4)

Peripherals	Address		Number of access cycles					
			ICLK = FCLK		ICLK > FCLK*1		Cycle Unit	Related function
	From	To	Read	Write	Read	Write		
FLAD, FACI	0x407F_C000	0x407F_EFFF	5	4	2 to 5	2 to 4	FCLK	Data Flash, Flash Application Command Interface

Note 1. If the number of PCLK or FCLK cycles is non-integer (for example 1.5), the minimum value is without the decimal point, and the maximum value is rounded up to the decimal point. For example, 1.5 to 2. 5 is 1 to 3.

Note 2. When accessing a 16-bit register (FTDRHL, FRDRHL, FCR, FDR, LSR, and CDR), access is 2 cycles more than the value shown in Table A3.2. When accessing an 8-bit register (including FTDRH, FTDRL, FRDRH, and FRDRL), the access cycles are as shown in Table A3.2.

Note 3. When accessing the 32-bit register (SPDR), access is 2 cycles more than the value in Table A3.2. When accessing an 8-bit or 16-bit register (SPDR_HA), the access cycles are as shown in Table A3.2.

Note 4. The access cycles depend on the QSPI bus cycles.

Downloaded from Arrow.com.

Revision History

Revision 1.00 — Apr 09, 2020

First edition, issued

Revision 1.10 — Sep 29, 2020

1. Overview:
- Added note to Figure 1.1 Block diagram.

2. Electrical Characteristics:
- Added description that Supported peripheral functions and pins differ from one product name to another.

Appendix:
- Removed NOTE about USB host operation in Appendix 1.
- Added Access cycles for FLAD and FACI to Tables 3.2 in Appendix 3.
- Removed NOTE2 about BWAIT in Table 3.2, and along with that,changed the NOTE number in this table in Appendix 3.

Revision 1.20 — Dec 6, 2022

1. Overview:
- Fixed the ADC12 functional description in Table 1.9 Analog.
- Added Table 1.12 I/O ports to 1.1 Function Outline.
- Fixed Figure 1.2 Part numbering scheme.
- Added the row of PLBG0064JC-A and PLBG0144KB-A to Table 1.13 Product list.
- Added the column of BGA 64-pin and BGA 144-pin to Table 1.14 Function Comparison.
- Fixed the row of SSIE and ADC12 in Table 1.14 Function Comparison.
- Added the row of I/O ports to Table 1.14 Function Comparison.
- Added Note 2 to Table 1.14 Function Comparison.
- Added Figure 1.6 Pin assignment for BGA 64-pin.
- Added Figure 1.7 Pin assignment for BGA 144-pin.
- Added the column of BGA 64-pin and BGA 144-pin to Table 1.16 Pin list.
- Changed from SSISCK0_B to SSIBCK0_B in Table 1.16 Pin list.

2. Electrical Characteristics:
- Fixed the minimum value of VBATT power supply voltage in Table 2.2 Recommended operating conditions.
- Added Note 2 to Table 2.2 Recommended operating conditions.
- Fixed Table 2.3 DC characteristics.
- Fixed Table 2.11 Thermal Resistance.
- Fixed Table 2.41 A/D conversion characteristics for interleaving.
- Fixed the minimum value of VBATT in Table 2.47 Battery backup function characteristics.
- Added Note 1 to Table 2.47 Battery backup function characteristics.

Appendix:
- Fixed Figure 2.4 BGA 64-pin in Appendix 2. Package Dimensions.
- Fixed Figure 2.5 BGA 144-pin in Appendix 2. Package Dimensions.

Revision 1.30 — Jul 28, 2023

Features:
- Added BGA 64-pin and BGA 144-pin to the list of pins for Ta = -40℃ to +105℃.
- Removed BGA 64-pin and BGA 144-pin from the list of pins for Ta = -40℃ to +85℃.

1. Overview:
- Updated Table1.13 Product list.
- Updated parts number in Table 1.14 Function Comparison.

2. Electrical Characteristics:
- Updated Table 2.11 Thermal Resistance.
- Updated Table 2.34 SD/MMC Host Interface signal timing.

Revision 1.50 — Apr 11, 2025

1. Overview:
- Updated Figure 1.2 Part numbering scheme.
- Updated Table 1.15 Function Comparison.

Appendix:
- Updated Appendix 1. Port States in Each Processing Mode.

Downloaded from Arrow.com.

Revision 1.60 — Mar 27, 2026

1. Overview:
- Added Table 1.12 Security.

2. Electrical Characteristics:
- Added Table 2.49 CTSU measured capacitance reduction characteristics due to VCC power supply ripple noise (reference value).
- Added Figure 2.86 Measured capacitance reduction amount.

Downloaded from Arrow.com.

General Precautions in the Handling of Microprocessing Unit and Microcontroller Unit Products

The following usage notes are applicable to all Microprocessing unit and Microcontroller unit products from Renesas. For detailed usage notes on the products covered by this document, refer to the relevant sections of the document as well as any technical updates that have been issued for the products.

1. Precaution against Electrostatic Discharge (ESD)
   A strong electrical field, when exposed to a CMOS device, can cause destruction of the gate oxide and ultimately degrade the device operation. Steps must be taken to stop the generation of static electricity as much as possible, and quickly dissipate it when it occurs. Environmental control must be adequate. When it is dry, a humidifier should be used. This is recommended to avoid using insulators that can easily build up static electricity. Semiconductor devices must be stored and transported in an anti-static container, static shielding bag or conductive material. All test and measurement tools including work benches and floors must be grounded. The operator must also be grounded using a wrist strap. Semiconductor devices must not be touched with bare hands. Similar precautions must be taken for printed circuit boards with mounted semiconductor devices.
2. Processing at power-on
   The state of the product is undefined at the time when power is supplied. The states of internal circuits in the LSI are indeterminate and the states of register settings and pins are undefined at the time when power is supplied. In a finished product where the reset signal is applied to the external reset pin, the states of pins are not guaranteed from the time when power is supplied until the reset process is completed. In a similar way, the states of pins in a product that is reset by an on-chip power-on reset function are not guaranteed from the time when power is supplied until the power reaches the level at which resetting is specified.
3. Input of signal during power-off state
   Do not input signals or an I/O pull-up power supply while the device is powered off. The current injection that results from input of such a signal or I/O pull-up power supply may cause malfunction and the abnormal current that passes in the device at this time may cause degradation of internal elements. Follow the guideline for input signal during power-off state as described in your product documentation.
4. Handling of unused pins
   Handle unused pins in accordance with the directions given under handling of unused pins in the manual. The input pins of CMOS products are generally in the high-impedance state. In operation with an unused pin in the open-circuit state, extra electromagnetic noise is induced in the vicinity of the LSI, an associated shoot-through current flows internally, and malfunctions occur due to the false recognition of the pin state as an input signal become possible.
5. Clock signals
   After applying a reset, only release the reset line after the operating clock signal becomes stable. When switching the clock signal during program execution, wait until the target clock signal is stabilized. When the clock signal is generated with an external resonator or from an external oscillator during a reset, ensure that the reset line is only released after full stabilization of the clock signal. Additionally, when switching to a clock signal produced with an external resonator or by an external oscillator while program execution is in progress, wait until the target clock signal is stable.
6. Voltage application waveform at input pin
   Waveform distortion due to input noise or a reflected wave may cause malfunction. If the input of the CMOS device stays in the area between V_{IL} (Max.) and V_{IH} (Min.) due to noise, for example, the device may malfunction. Take care to prevent chattering noise from entering the device when the input level is fixed, and also in the transition period when the input level passes through the area between V_{IL} (Max.) and V_{IH} (Min.).
7. Prohibition of access to reserved addresses
   Access to reserved addresses is prohibited. The reserved addresses are provided for possible future expansion of functions. Do not access these addresses as the correct operation of the LSI is not guaranteed.
8. Differences between products
   Before changing from one product to another, for example to a product with a different part number, confirm that the change will not lead to problems. The characteristics of a microprocessing unit or microcontroller unit products in the same group but having a different part number might differ in terms of internal memory capacity, layout pattern, and other factors, which can affect the ranges of electrical characteristics, such as characteristic values, operating margins, immunity to noise, and amount of radiated noise. When changing to a product with a different part number, implement a system-evaluation test for the given product.

Downloaded from Arrow.com.

Notice

1. Descriptions of circuits, software and other related information in this document are provided only to illustrate the operation of semiconductor products and application examples. You are fully responsible for the incorporation or any other use of the circuits, software, and information in the design of your product or system. Renesas Electronics disclaims any and all liability for any losses and damages incurred by you or third parties arising from the use of these circuits, software, or information.
2. Renesas Electronics hereby expressly disclaims any warranties against and liability for infringement or any other claims involving patents, copyrights, or other intellectual property rights of third parties, by or arising from the use of Renesas Electronics products or technical information described in this document, including but not limited to, the product data, drawings, charts, programs, algorithms, and application examples.
3. No license, express, implied or otherwise, is granted hereby under any patents, copyrights or other intellectual property rights of Renesas Electronics or others.
4. You shall be responsible for determining what licenses are required from any third parties, and obtaining such licenses for the lawful import, export, manufacture, sales, utilization, distribution or other disposal of any products incorporating Renesas Electronics products, if required.
5. You shall not alter, modify, copy, or reverse engineer any Renesas Electronics product, whether in whole or in part. Renesas Electronics disclaims any and all liability for any losses or damages incurred by you or third parties arising from such alteration, modification, copying or reverse engineering.
6. Renesas Electronics products are classified according to the following two quality grades: “Standard” and “High Quality”. The intended applications for each Renesas Electronics product depends on the product’s quality grade, as indicated below.
   "Standard": Computers; office equipment; communications equipment; test and measurement equipment; audio and visual equipment; home electronic appliances; machine tools; personal electronic equipment; industrial robots; etc.
   "High Quality": Transportation equipment (automobiles, trains, ships, etc.); traffic control (traffic lights); large-scale communication equipment; key financial terminal systems; safety control equipment; etc.
   Unless expressly designated as a high reliability product or a product for harsh environments in a Renesas Electronics data sheet or other Renesas Electronics document, Renesas Electronics products are not intended or authorized for use in products or systems that may pose a direct threat to human life or bodily injury (artificial life support devices or systems; surgical implantations; etc.), or may cause serious property damage (space system; undersea repeaters; nuclear power control systems; aircraft control systems; key plant systems; military equipment; etc.). Renesas Electronics disclaims any and all liability for any damages or losses incurred by you or any third parties arising from the use of any Renesas Electronics product that is inconsistent with any Renesas Electronics data sheet, user’s manual or other Renesas Electronics document.
7. No semiconductor product is absolutely secure. Notwithstanding any security measures or features that may be implemented in Renesas Electronics hardware or software products, Renesas Electronics shall have absolutely no liability arising out of any vulnerability or security breach, including but not limited to any unauthorized access to or use of a Renesas Electronics product or a system that uses a Renesas Electronics product. RENESAS ELECTRONICS DOES NOT WARRANT OR GUARANTEE THAT RENESAS ELECTRONICS PRODUCTS, OR ANY SYSTEMS CREATED USING RENESAS ELECTRONICS PRODUCTS WILL BE INVULNERABLE OR FREE FROM CORRUPTION, ATTACK, VIRUSES, INTERFERENCE, HACKING, DATA LOSS OR THEFT, OR OTHER SECURITY INTRUSION (“Vulnerability Issues”). RENESAS ELECTRONICS DISCLAIMS ANY AND ALL RESPONSIBILITY OR LIABILITY ARISING FROM OR RELATED TO ANY VULNERABILITY ISSUES. FURTHERMORE, TO THE EXTENT PERMITTED BY APPLICABLE LAW, RENESAS ELECTRONICS DISCLAIMS ANY AND ALL WARRANTIES, EXPRESS OR IMPLIED, WITH RESPECT TO THIS DOCUMENT AND ANY RELATED OR ACCOMPANYING SOFTWARE OR HARDWARE, INCLUDING BUT NOT LIMITED TO THE IMPLIED WARRANTIES OF MERCHANTABILITY, OR FITNESS FOR A PARTICULAR PURPOSE.
8. When using Renesas Electronics products, refer to the latest product information (data sheets, user’s manuals, application notes, “General Notes for Handling and Using Semiconductor Devices” in the reliability handbook, etc.), and ensure that usage conditions are within the ranges specified by Renesas Electronics with respect to maximum ratings, operating power supply voltage range, heat dissipation characteristics, installation, etc. Renesas Electronics disclaims any and all liability for any malfunctions, failure or accident arising out of the use of Renesas Electronics products outside of such specified ranges.
9. Although Renesas Electronics endeavors to improve the quality and reliability of Renesas Electronics products, semiconductor products have specific characteristics, such as the occurrence of failure at a certain rate and malfunctions under certain use conditions. Unless designated as a high reliability product or a product for harsh environments in a Renesas Electronics data sheet or other Renesas Electronics document, Renesas Electronics products are not subject to radiation resistance design. You are responsible for implementing safety measures to guard against the possibility of bodily injury, injury or damage caused by fire, and/or danger to the public in the event of a failure or malfunction of Renesas Electronics products, such as safety design for hardware and software, including but not limited to redundancy, fire control and malfunction prevention, appropriate treatment for aging degradation or any other appropriate measures. Because the evaluation of microcomputer software alone is very difficult and impractical, you are responsible for evaluating the safety of the final products or systems manufactured by you.
10. Please contact a Renesas Electronics sales office for details as to environmental matters such as the environmental compatibility of each Renesas Electronics product. You are responsible for carefully and sufficiently investigating applicable laws and regulations that regulate the inclusion or use of controlled substances, including without limitation, the EU RoHS Directive, and using Renesas Electronics products in compliance with all these applicable laws and regulations. Renesas Electronics disclaims any and all liability for damages or losses occurring as a result of your noncompliance with applicable laws and regulations.
11. Renesas Electronics products and technologies shall not be used for or incorporated into any products or systems whose manufacture, use, or sale is prohibited under any applicable domestic or foreign laws or regulations. You shall comply with any applicable export control laws and regulations promulgated and administered by the governments of any countries asserting jurisdiction over the parties or transactions.
12. It is the responsibility of the buyer or distributor of Renesas Electronics products, or any other party who distributes, disposes of, or otherwise sells or transfers the product to a third party, to notify such third party in advance of the contents and conditions set forth in this document.
13. This document shall not be reprinted, reproduced or duplicated in any form, in whole or in part, without prior written consent of Renesas Electronics.
14. Please contact a Renesas Electronics sales office if you have any questions regarding the information contained in this document or Renesas Electronics products.

(Note1) “Renesas Electronics” as used in this document means Renesas Electronics Corporation and also includes its directly or indirectly controlled subsidiaries.
(Note2) “Renesas Electronics product(s)” means any product developed or manufactured by or for Renesas Electronics.

(Rev.5.0-1 October 2020)

Corporate Headquarters

TOYOSU FORESIA, 3-2-24 Toyosu,
Koto-ku, Tokyo 135-0061, Japan
www.renesas.com

Contact Information

For further information on a product, technology, the most up-to-date version of a document, or your nearest sales office, please visit:
www.renesas.com/contact/

Trademarks

Renesas and the Renesas logo are trademarks of Renesas Electronics Corporation. All trademarks and registered trademarks are the property of their respective owners.

© 2026 Renesas Electronics Corporation. All rights reserved.

Downloaded from Arrow.com.