Data Sheet | Item Number: 890-1702

T-distribution connector; 2-pole; Cod. B; 1 input; 2 outputs; 3 locking levers; for flying leads; light green

https://www.wago.com/890-1702





Color: light green

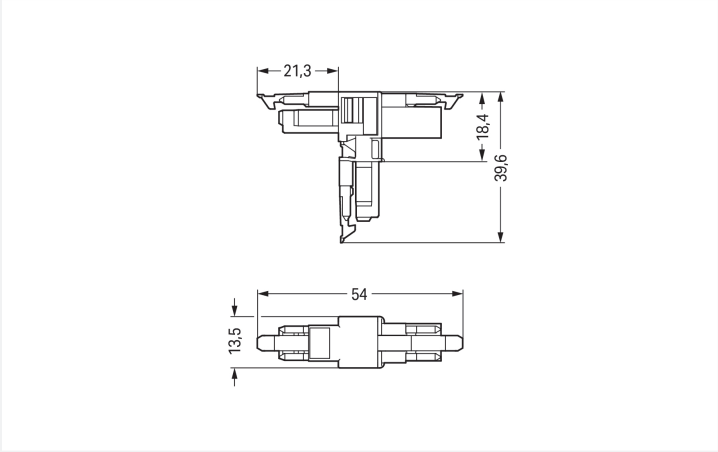

Dimensions in mm

Distribution connector *WINSTA*® MINI with protection against mismating

The *WINSTA*® MINI distribution connector B coding allows installation of solid and fine-stranded conductors. WAGO pluggable installation connectors can be used when criteria repeat or are distributed on a specified grid, for example for installing grid lighting or flush-mount lighting. The mechanical coding and color coding of the pluggable installation connector ensure error-free installation of the individual components – including protection against mismating. Solutions like the *WINSTA*® MINI pluggable installation connectors with B coding are suitable for applications involving process control, such as for lighting or within data networks. *WINSTA*® MINI satisfies the demand for miniaturisation. Our smallest pluggable connection system is especially suitable for lights, for example, since due to LED technology, these offer significantly less space for the connection technology.

WINSTA® MINI solutions for your electrical installation – protected against mismating and maintenance-free

The WINSTA® Pluggable Connection System is ideally tailored to the strict requirements of building installation. It makes electrical installation pluggable, and thus more efficient, more reliable, and error-free. Use of this pre-assembled system reduces assembly times and errors during installation at the construction site. Now you can also reduce installation expenses without compromising quality and safety: with protection against mismating reduces the need for servicing and prevents unnecessary downtime.

- protection against mismating eliminates errors
- compact design for conductors with a cross-section up to 1.5 mm²
- for automation controllers
- exact dimensions

Downloaded from Arrow.com.

- convenient installation and commissioning

Notes

General safety information	1. Only to be used by a qualified electrician or by a person electrically instructed for the task (EIP per DIN VDE 0105-100). 2. Do not install while energized or under load. 3. Use only for its intended purpose. 4. Observe applicable national regulations, standards and directives. 5. Observe the technical specifications of the products. 6. Ensure correct polarity assignment. 7. Do not use damaged or contaminated components. 8. Observe conductor types, conductor cross-sections, strip lengths and cable diameters. 9. Insert conductors up to the stop. 10. Use only with locking lever and strain relief. 11. Use original accessories only. **To be sold only with installation instructions!**
Variants:	Other pole markings Other versions (or variants) can be requested from WAGO Sales or configured at https://configurator.wago.com/.

Electrical data

Ratings per IEC/EN 60664-1

Overvoltage category	III	III	II
Pollution degree	3	2	2
Nominal voltage	250 V	-	-
Rated impulse withstand voltage	4 kV	-	-
Rated current	16 A	-	-

Approvals per UL 1977

Rated voltage	600 V
Rated current	14 A

General information

Note on contact resistance	approx. 1 mΩ of contact resistance approx. 0.25 mΩ contact transition plug/socket

Connection Data

Total number of potentials	2

Connection 1

Pole number	2
Coding	B

Physical data

Pin spacing	4.4 mm / 0.173 inches
Width	13.5 mm / 0.531 inches
Height	39.6 mm / 1.559 inches
Depth	54 mm / 2.122 inches

Mechanical data

Use	Control technology
Variable coding	No
Marking	1 2
Potential marking	1 2
Mating force of a plug-in connection	Approx. 20 … 70 N (depending on pole number)
Retention force of a plug-in connection	When locked: > 80 N
Unmating force of a plug-in connection	Unlocked: approx. 20 … 70 N (depending on pole number)
Number of mating cycles	200, without resistive load
Type of distribution box	T-distribution connector
Protection type	IP20; IP40 when mated
Suitable	for flying leads

Downloaded from Arrow.com.

Plug-in connection

Mismating protection	Yes
Note on mismating protection	All *WINSTA*® components are 100% protected against mismating when: a.) plugging different numbers of poles b.) plugging while rotated 180 c.) plugging while laterally staggered d.) plugging one pole
Locking lever	Yes
Locking of plug-in connection	Locking lever
Note on locking system	All connectors for mounted installations (snap-in versions for lighting fixtures or devices, all types of PCB and distribution connectors) are factory-equipped with locking levers to ensure plugs and sockets are securely locked. Additional locking levers are only required for flying leads (plug/socket).
Number of locking levers	3

Material data

Note (material data)	Information on material specifications can be found here
Color	light green
Material group	I
Insulation material (main housing)	Polyamide (PA66)
Flammability class per UL94	V0
Contact material	Copper or copper alloy; surface-treated
Contact Plating	Tin
Fire load	0.114 MJ
Weight	6.3 g

Environmental requirements

Processing temperature	-5 … +40 °C
Continuous operating temperature	-35 … +85 °C
Note on continuous operating temperature	Insulating parts for temperatures ≤ 105 °C

Commercial data

Product Group	20 (Winsta)
PU (SPU)	25 pcs
Packaging type	Box
Country of origin	DE
GTIN	4050821560005
Customs tariff number	85366990990

Product Classification

UNSPSC	39121402
eCl@ss 10.0	27-44-06-03
eCl@ss 9.0	27-44-06-03
ETIM 9.0	EC002567
ETIM 10.0	EC002567
ECCN	NO US CLASSIFICATION

Downloaded from Arrow.com.

Environmental Product Compliance

RoHS Compliance Status	Compliant,No Exemption

Downloads

Environmental Product Compliance

Compliance Search

Environmental Product Compliance 890-1702

Documentation

Bid Text

890-1702	19.02.2019	xml 2.85 KB	
890-1702	03.12.2014	doc 22.50 KB	

CAD/CAE-Data

CAD data

2D/3D Models 890-1702

CAE data

WSCAD Universe 890-1702

Installation Notes

Installation



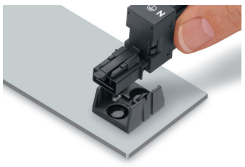

Secure the mounting plate via pins.

Downloaded from Arrow.com.