We connect and protect

Plug-In Unit Kit With Trapezoid Handle, Shielded, Grey, 3 U, 4 HP

CATALOG NUMBER

20848-664

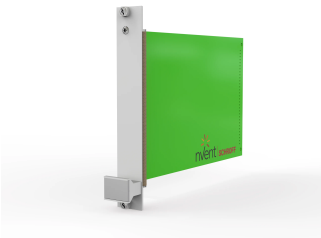

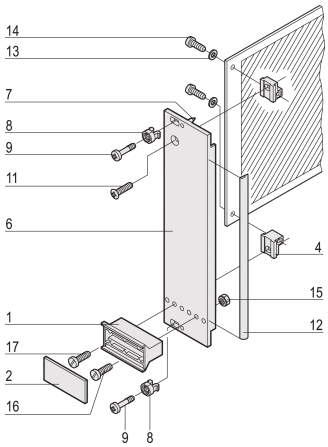

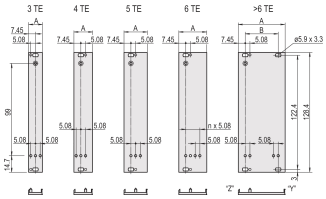

Plug-in unit, with static handle and U-shaped front panel. The grey handle is assembled on the front panel. The U-shaped panel enables the assembly of a textile gasket.

CERTIFICATIONS

RoHS COMPLIANT

FEATURES

Front panel, U-profile, shielded

Handle without extraction function

Downloaded from Arrow.com.

PRODUCT ATTRIBUTES

Rack Height: 3U

Rack Width: 4HP

Package Quantity: 1

Handle Type: Trapezoid, Static

Mounting: Screw-on Front

Gasket Type: Textile EMC

Front Finish: Anodized

Rear Finish: Etched

Treated Edges: No

Flammability Rating: UL® 94V-0

Complies With: EN 45545-2, R22-R24, HL3; IEC 60297-3-101

EMC Shielding: Yes

Finish: Anodized; Passivated

Material: Aluminum

Product Type: Front Panel

Type: Front Panel with Handle (PIU)

Gross Weight: 0.066kg

DIAGRAMS

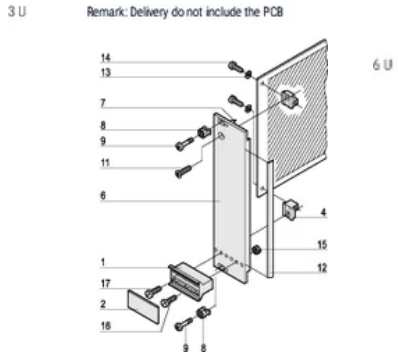

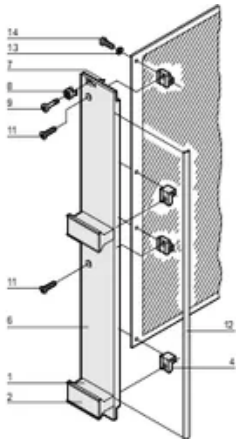

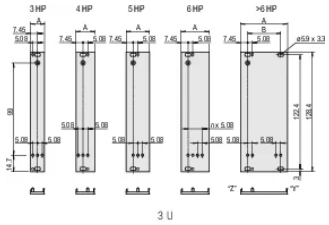

WARNING

nVent products shall be installed and used only as indicated in nVent's product instruction sheets and training materials. Instruction sheets are available at www.nvent.com and from your nVent customer service representative. Improper installation, misuse, misapplication or other failure to completely follow nVent's instructions and warnings may cause product malfunction, property damage, serious bodily injury and death and/or void your warranty.

Downloaded from Arrow.com.

North America
All locations
+1.763.422.2661
Chat with us:
nvent.com/schroff

Europe
Straubenhardt, Germany
+49.7082.794.0
Betschdorf, France
+33.3.88.90.64.90
Warsaw, Poland
+48.22.209.98.35
Assago, Italy
+39.02.932.7141
Chat with us:
nvent.com/schroff

Asia
Shanghai, China
+86.21.2412.6943
Qingdao, China
+86.532.8771.6101
Singapore
+65.6768.5800
Shin-Yokohama, Japan
+81.45.476.0271
Chat with us:
nvent.com/schroff

Middle East & India
Dubai, United Arab Emirates
+971.4.378.1700
Bangalore, India
+91.80.6715.2001
Istanbul, Turkey
+90.216.250.7374
Chat with us:
nvent.com/schroff

Our powerful portfolio of brands:

CADDY ERICO HOFFMAN ILSCO SCHROFF TRACHTE

©2026 nVent. All nVent marks and logos are owned or licensed by nVent Services GmbH or its affiliates. All other trademarks are the property of their respective owners. nVent reserves the right to change specifications without notice.

This document is system-generated.

Downloaded from Arrow.com.