87046-2 Product Details

Live Product Chat

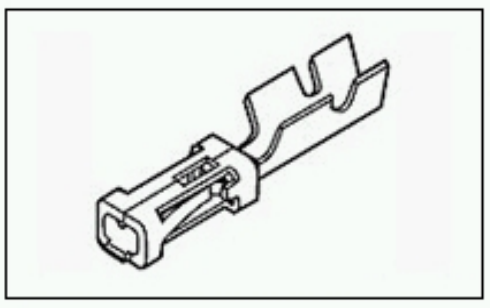

87046-2

TE Part Number: 87046-2
Active
Add to Part List

.100 AMPMODU Headers, Housings & Contacts

Always EU RoHS/ELV Compliant (Statement of Compliance)

Product Highlights:
- Contact
- Contact Type = Receptacle
- Terminate To Wire
- Wire Insulation Diameter = 1.75 mm
- Wire Range = 0.20-0.60² [24-20] mm [AWG]

View all Features | Find Similar Products

Quick Links
- Check Pricing & Availability
- Search for Tooling
- Product Feature Selector
- Contact Us About This Product
- Request Samples NEW!

Documentation & Additional Information

Product Drawings:
- CRIMP SNAP-IN, LOOSE PIECE CONTACT, MOD IV-1/2, (PDF, English)

Catalog Pages/Data Sheets:
- None Available

Product Specifications:
- None Available

Application Specifications:
- AMPMODU MOD IV, IV1/2, and V Receptacles and Housings (PDF, English)

Instruction Sheets:
- None Available

CAD Files:
- None Available

List all Documents

Additional Information:
- Product Line Information

Related Products:
- Tooling

Product Features (Please use the Product Drawing for all design activity)

Product Type Features:
- Product Type = Contact
- Wire Insulation Diameter (mm [in]) = 1.75 [0.069]
- Connector Series = Mod IV.v
- Wire Termination Type = Crimp
- With Insulation Support = Yes
- Applied Pressure = Intermediate
- Comment = (*) For use with Model "K" machines. Call the Technical Assistance Center (1-800-522-6752) for part numbers of applicators for use with Model "G" machines, as well as other bench machines and fully automatic AMPOMATOR lead making machines.

Electrical Characteristics:
- Voltage Rating (VAC) = 250
- Contact Current Rating (Amps.) = 3
- Termination Resistance (mΩ) = 12
- Insulation Resistance (MΩ) = 5,000
- Dielectric Withstanding Voltage (V) = 750

Termination Related Features:
- Crimp Area Plating = Gold over Nickel

Body Related Features:
- Wire Range (mm [AWG]) = 0.20-0.60² [24-20]

Contact Related Features:
- Contact Type = Receptacle
- Contact Mating Area Plating Material = Gold (30)
- Contact Material = Beryllium Copper
- Approved Standards = UL E28476, CSA LR7189

Industry Standards:
- RoHS/ELV Compliance = RoHS compliant, ELV compliant
- Lead Free Solder Processes = Not relevant for lead free process
- RoHS/ELV Compliance History = Always was RoHS compliant

Conditions for Usage:
- Terminate To = Wire
- Operating Temperature (°C) = -65 – +105

Packaging Related Features:
- Packaging Method = Loose Piece

Other:
- Brand = AMP

© 2008 Tyco Electronics Corporation All Rights Reserved
Downloaded from Arrow.com.