DATE	DESCRIPTION	REV.
11.15.99	CHANGE AS PER ECN 99–087	A
1.16.07	CHANGE AS PER ECN 07–003	B
6.12.09	CHANGE AS PER ECN 09–067	C
10.24.18	CHANGE AS PER ECN 18–042	D

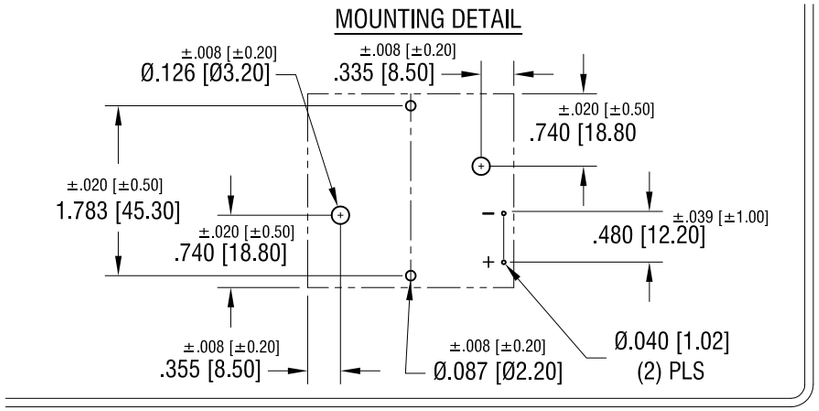

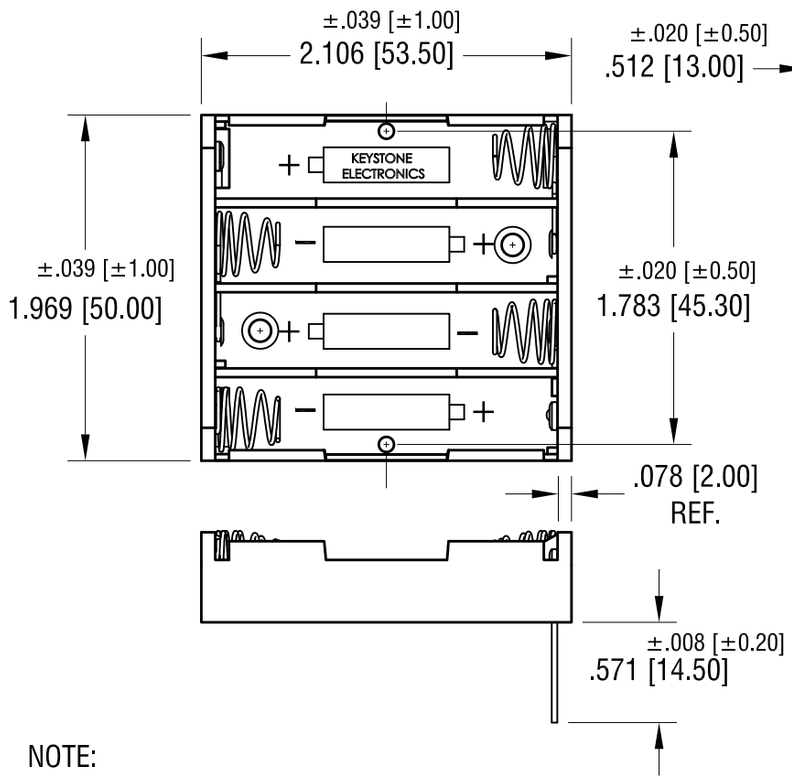

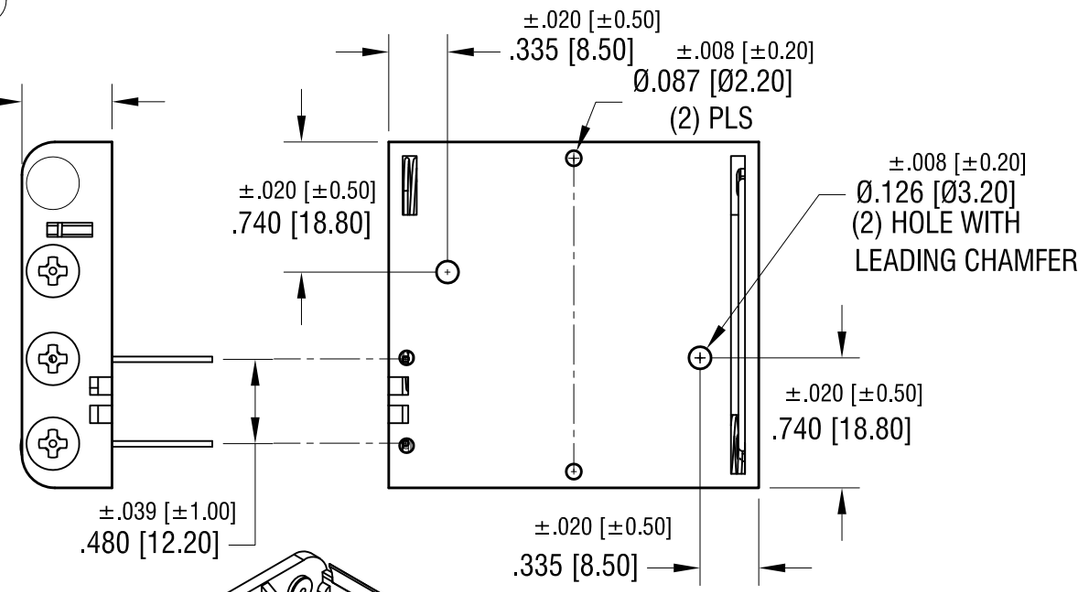

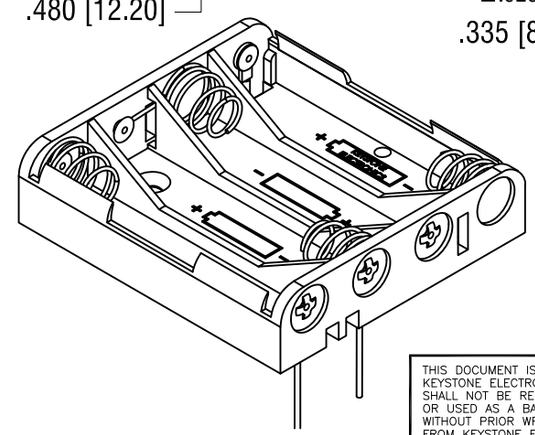

NOTE:

1. HOLDER: MAT'L: POLYPROPYLENE
2. SPRING: MAT'L: MUSIC WIRE, .024 [0.60] DIA.
3. PC TERMINALS: MAT'L: BRASS, .032 [0.81] DIA.

THIS DOCUMENT IS THE PROPERTY OF KEYSTONE ELECTRONICS CORP. AND SHALL NOT BE REPRODUCED, DISTRIBUTED OR USED AS A BASIS FOR MANUFACTURE WITHOUT PRIOR WRITTEN PERMISSION FROM KEYSTONE ELECTRONICS CORP.

KEYSTONE ELECTRONICS CORP.
www.keyelco.com • NEW HYDE PARK, NY 11040 • Tel (516) 328-7500

PART NAME: PC BATTERY HOLDER (4) 'AAA'

MATERIAL: AS NOTED

FINISH: NICKEL PLATE

DRN BY: BOONE | DATE: 6.09.99

APP'D: LN | SCALE: 1X

TOLERANCES UNLESS OTHERWISE SPECIFIED — INCH [MM]
DECIMAL ± 0.15 [± 0.38]
ANGULAR ± 1°

CODE: C

DWG NO. 2481

Downloaded from Arrow.com.