THIS DRAWING IS UNPUBLISHED. RELEASED FOR PUBLICATION 20
© COPYRIGHT 20 BY - ALL RIGHTS RESERVED.

REVISIONS

P	LTR	DESCRIPTION	DATE	DWN	APVD
	A	RELEASED	27.JAN.'14	KT	HG

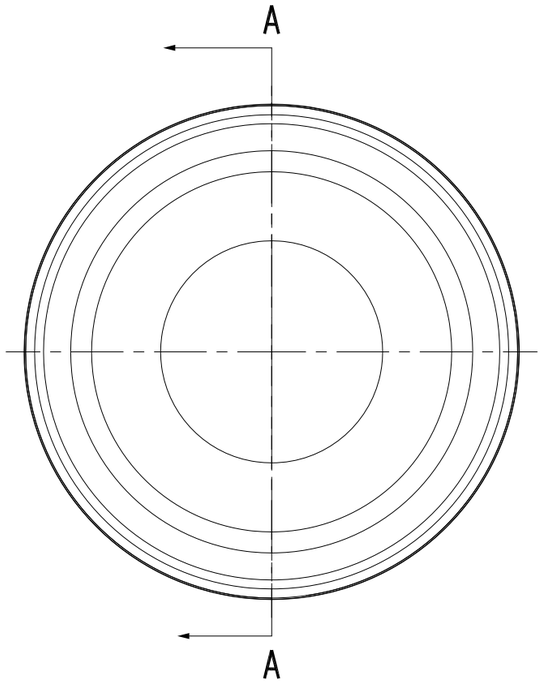

SECTION A-A

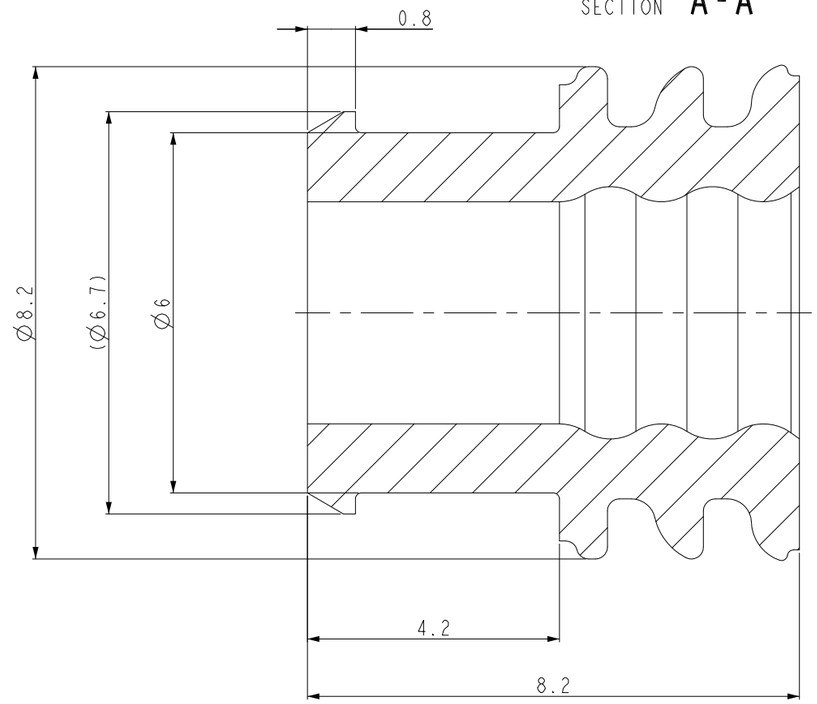

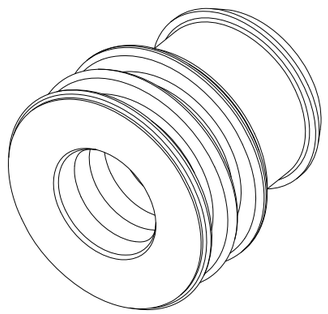

3D VIEW
SCALE 5:1

NOTES

1. GENERAL TOLERANCE: ±0.3, ±3°
2. SUITABLE FOR WIRE INSULATION DIA.: 4.6-5.0mm

COLOR	MATERIAL	DESCRIPTION	P/N
GRAY	SILICONE	SINGLE WIRE SEAL	2188967-3

THIS DRAWING IS A CONTROLLED DOCUMENT.

DIMENSIONS: mm

TOLERANCES UNLESS OTHERWISE SPECIFIED:
0 PLC ±
1 PLC ±
2 PLC ±
3 PLC ±
4 PLC ±
ANGLES ±

MATERIAL SEE TABLE
FINISH

DWN KT JUNG
CHK KT LIM
APVD HG CHO
PRODUCT SPEC -
APPLICATION SPEC -
WEIGHT -

TE Connectivity

NAME
SINGLE WIRE SEAL
FOR INSULATION DIA: 4.6-5.0MM

SIZE	CAGE CODE	DRAWING NO	RESTRICTED TO
A3	00779	C-2188967	-

CUSTOMER DRAWING | SCALE 10:1 | SHEET 1 OF 1 | REV A

1470-19 (3/13)

Downloaded from Arrow.com.