PRODUCT CATALOG

HIROSE ELECTRIC CO.,LTD.

FX23/FX23L Series

High Speed Transmission, 0.5mm Pitch Board-to-Board Floating Connectors

FunctionMAX™

Power / Signal

High Speed

Floating

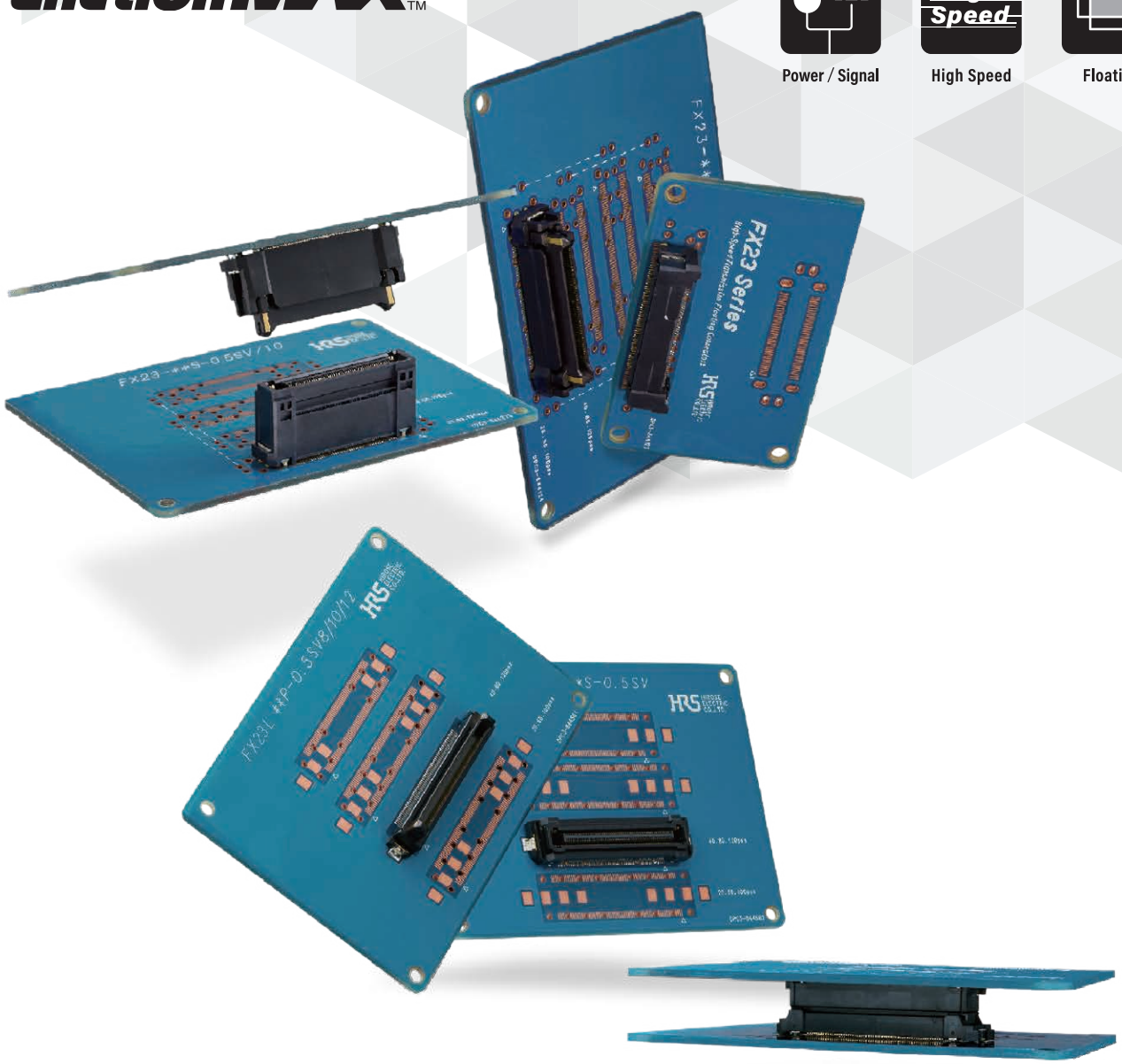

Product Page
https://www.hirose.com/en/product/compare?searchType=series&targets=FX23%2CFX23L

Feb. 2024

May.1.2026 Copyright 2026 HIROSE ELECTRIC CO., LTD. All Rights Reserved.

Downloaded from Arrow.com.

Features

1. Pitch: 0.5mm

2. Connection Type: Stacking (Height 8 to 30mm)/ Right Angle

3. Positions Available: 20/40/60/80/100/120 for signal + 4 pins for power

4. Floating Range
: X Direction: ±0.6mm
: Y Direction: ±0.6mm

A floating movement above the connector pitch is possible.

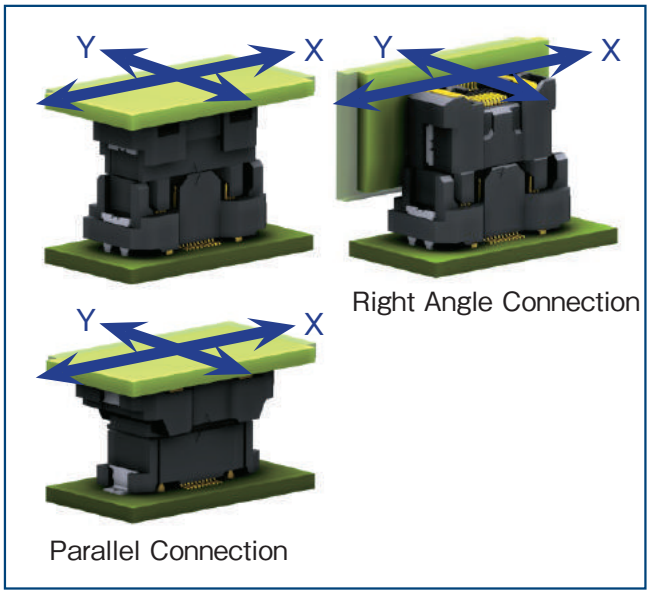

Floating Range: ±0.6mm in the X and Y directions

5. Supports PCIe Gen.4 (16Gbps)

Note : Please contact our sales representatives regarding compatibility with other transmission standards

May.1.2026 Copyright 2026 HIROSE ELECTRIC CO., LTD. All Rights Reserved.

Downloaded from Arrow.com.

6. Hybrid Power Design (3A/pin×4 lines)

The guide posts on both sides of the connector are equipped with 4 lines of power contacts in addition to signal contacts.

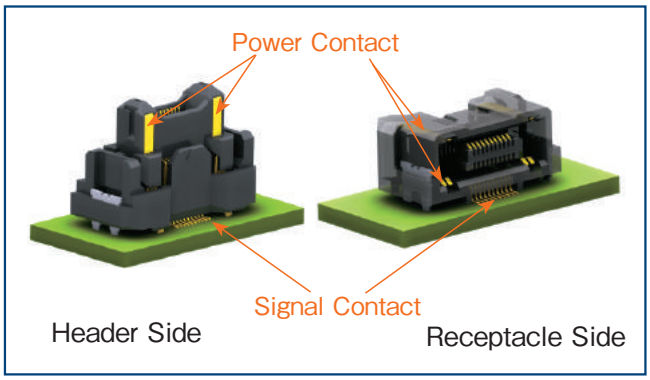

Hybrid Power/Signal Contacts

7. Current Capacity: Signal Contact 0.5A/pin Power Contact 3A/pin

8. Pick & Place (suction tape attached as standard)

9. Large guide post for excellent mating performance

Easy mating operation due to large self-alignment range.

■ Signal Integrity

● ICR (Insertion-loss-to-Crosstalk-Ratio)

The ICR containing cross-talk from 5 adjacent differential pairs provides adequate margin in comparison with the criteria based on the specification of IEEE802.3ap.

● Differential Impedance

Differential impedance is 100±10Ω at the rise time of 87.5ps (20 to 80%).

May.1.2026 Copyright 2026 HIROSE ELECTRIC CO., LTD. All Rights Reserved.

Downloaded from Arrow.com.

May.1.2026 Copyright 2026 HIROSE ELECTRIC CO., LTD. All Rights Reserved.

Product Specifications

Rated Current	Signal	Power	Operating Temperature (Note 1)	-55 to +105℃
	0.5A	3A	Storage Temperature Range (Note 2)	-10 to +60℃
Rated Voltage	Signal	Power		
	50V AC	200V AC		

Operating Humidity Range	90% or less relative humidity (No dew condensation)	Storage Humidity Range	90% or less relative humidity (No dew condensation)

Items	Specifications	Conditions
Contact Resistance	Signal : 70mΩ Max. Power : 20mΩ Max.	Measured at 100mA
Insulation Resistance	Signal : 100MΩ Max. Power : 1,000MΩ Max.	Signal : Measured at 100V DC Power : Measured at 250V DC
Withstanding Voltage	No insulation breakdown.	Signal Contacts Energized at 150V AC for 1 min. Power Contacts Energized at 600V AC for 1 min.
Mating Durability	Contact resistance of the signal part 80mΩ Max. Power part 30mΩ Max.	100 times
Vibration Proof	No electrical discontinuity of 1μs or more	Frequency 10 - 55Hz, half amplitude 0.75mm, 10 cycles in each of the 3-axis directions each for 5 minutes per cycle
Shock Resistance	No electrical discontinuity of 1μs or more	Acceleration of 490m/s^2 ; duration 11ms, sine half-wave, 3 cycles in each of the 3 axes each in both directions.
Moisture Resistance	Contact Resistance Signal : 80mΩ Max. / Power : 30mΩ Max. Insulation Resistance Signal : 100MΩ Min. / Power : 1,000MΩ Min.	Left to stand for 96 hours at a temperature of +40℃ and a humidity of 90 to 95%
Temperature Cycle	Contact Resistance Signal : 80mΩ Max. / Power : 30mΩ Max. Insulation Resistance Signal : 100MΩ Min. / Power : 1,000MΩ Min.	Temperature -55 → +85℃ 5 cycles for a series of time periods : 30 minutes → 30 minutes

Note 1 : Includes temperature rise due to current flow.
Note 2 : The term "storage" refers to the long-term storage condition of unused products before mounting on PCB.

Materials / Finish

Part	Materials		Finish	UL Standard
Insulator (FX23)	Header	Polyamide Resin	Black Color	UL94V-0
	Receptacle	LCP Resin		
Insulator (FX23L)	Header	Polyamide Resin		UL94V-0
	Receptacle			
Contact	Header	Copper Alloy	Contacted Part : Gold Plating Signal Contact-mounting Part : Gold Plating Power Contact-mounting Part : Pure Tin Plating	-
	Receptacle			
Retention Tab	Brass		Pure Tin Plating	-

Downloaded from Arrow.com.

Product Number Structure

Refer to the chart below when determining the product specifications from the product number.
Please select from the product numbers listed in this catalog when placing orders.

Straight Header

FX23 - 120 P - 0.5 SV 15
❶ ❷ ❸ ❹ ❺ ❻

Straight Receptacle

FX23 - 120 S - 0.5 SV 10
❶ ❷ ❸ ❹ ❺ ❻

Right Angle Receptacle

FX23 - 120 S - 0.5 SH
❶ ❷ ❸ ❹ ❺

❶ Series Name	FX23	❹ Contact Pitch	0.5mm
❷ No. of Pos.	20, 40, 60, 80, 100, 120	❺ Product Type	SV : Straight SH : Right angle type
❸ Connector Type	P : Header type S : Receptacle type	❻ Product Height Type	Mated Height [mm] = Numerical value on the header side + Numerical value on the receptacle side

Straight Header

FX23L - 120 P - 0.5 SV 8
❶ ❷ ❸ ❹ ❺ ❻

Straight Receptacle

FX23L - 120 S - 0.5 SV 10
❶ ❷ ❸ ❹ ❺ ❻

❶ Series Name	FX23L	❹ Contact Pitch	0.5mm
❷ No. of Pos.	20, 40, 60, 80, 100, 120	❺ Product Type	SV : Straight
❸ Connector Type	P : Header type S : Receptacle type	❻ Product Height Type	Mated Height [mm] = Numerical value on the header side

May.1.2026 Copyright 2026 HIROSE ELECTRIC CO., LTD. All Rights Reserved.

Downloaded from Arrow.com.

List of Connection Variations

● Right Angle Connection

Right Angle Receptacle

FX23-##S-0.5SH

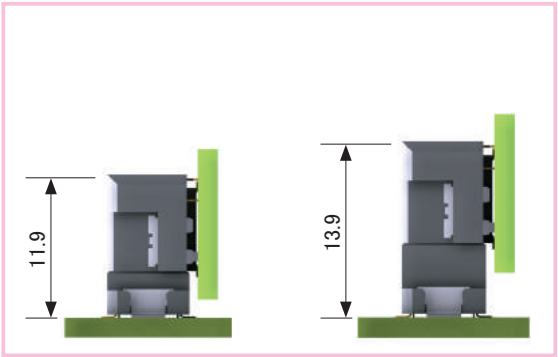

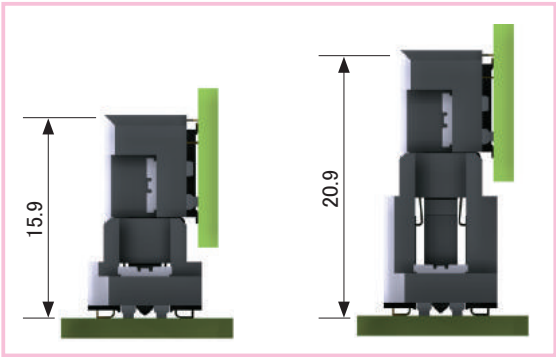

Rigid Combination

FX23L-##P-0.5SV10 FX23L-##P-0.5SV12

Floating Combination

FX23-##P-0.5SV15 FX23-##P-0.5SV20

Straight Header

##⇒No. of Pos.: 20, 40, 60, 80, 100, 120

Note : FX23L-##P-0.5SV8 and FX23-##S-0.5SH cannot engage due to interference of the retention tab.

May.1.2026 Copyright 2026 HIROSE ELECTRIC CO., LTD. All Rights Reserved.

Downloaded from Arrow.com.

● Parallel Connection

Height Variation

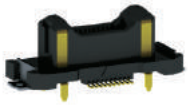

FX23L-##P-0.5SV8
Rigid Type

FX23L-##P-0.5SV10
Rigid Type

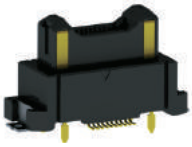

FX23L-##P-0.5SV12
Rigid Type

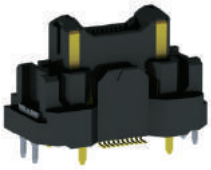

FX23-##P-0.5SV15
Floating Type

FX23-##P-0.5SV20
Floating Type

FX23L-##S-0.5SV
Floating Type

FX23L Series
Standard Type
Floating Range :
±0.6mm in the X and Y directions

8mm

10mm

12mm

FX23 × FX23L Series
Double Floating Type
Floating Range :
±1.2mm in the
X and Y directions

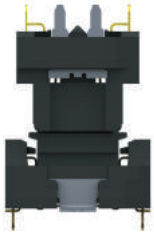

14mm

19mm

FX23-##S-0.5SV
Rigid Type

FX23 × FX23L Series
Rigid Type
⚠ No floating ability

9mm

11mm

13mm

FX23-##S-0.5SV10
Rigid Type

19mm

21mm

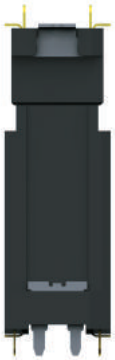

23mm

FX23 Series
Standard Type
Floating Range :
±0.6mm in the
X and Y directions

15mm

20mm

25mm

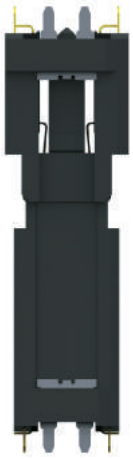

30mm

May.1.2026 Copyright 2026 HIROSE ELECTRIC CO., LTD. All Rights Reserved.

Downloaded from Arrow.com.

High Speed Transmission Properties (FX23 : h=15mm, FX23L : h=12mm)

Pin Assignment

The following pin arrangement is recommended to match the 100Ω differential impedance and to contain cross-talk.

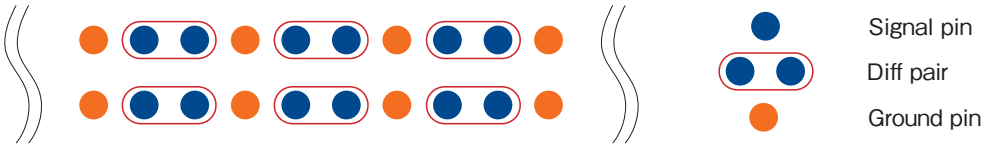

Differential Impedance 80ps Rise Time (20 to 80%)

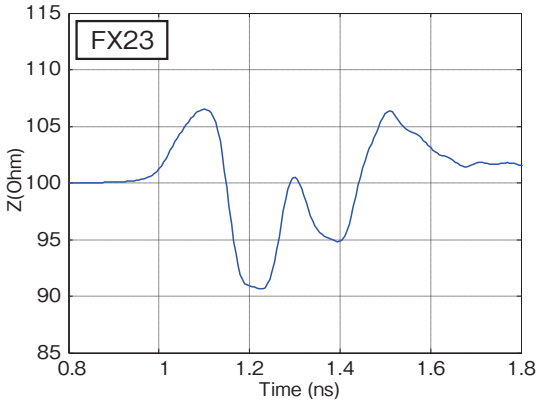

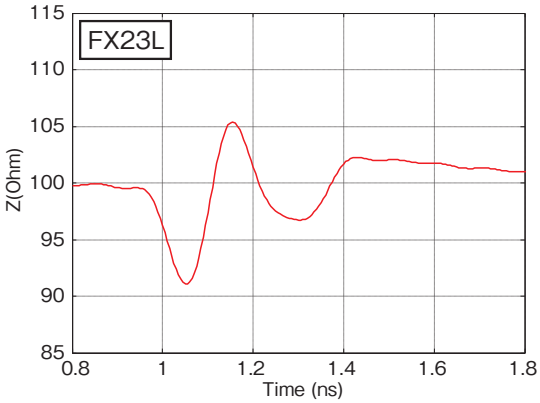

Meets the criterion of 100±10Ω at the rise time of 80ps (20 to 80%).

Insertion Loss

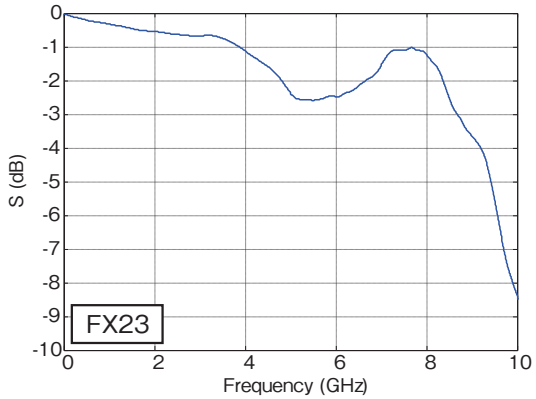

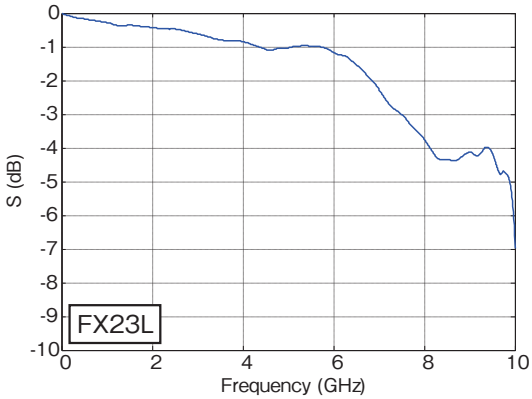

Return Loss

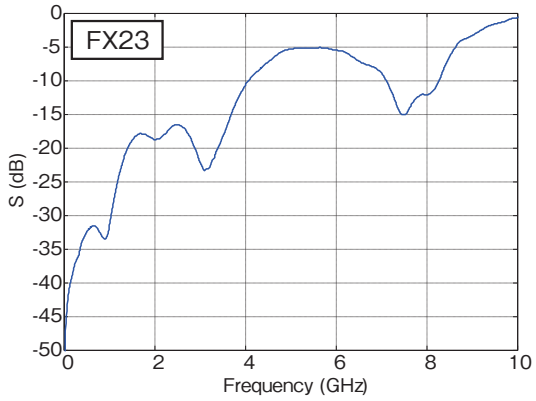

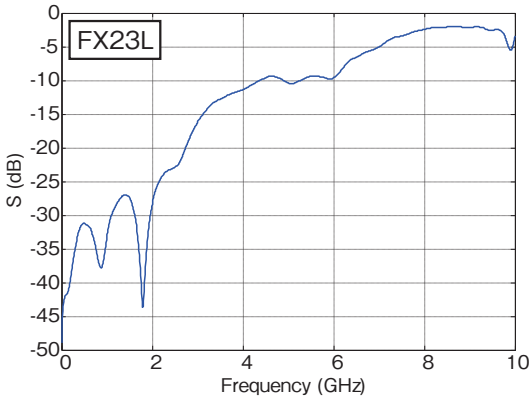

Superior insertion loss and return loss characteristics up to 5GHz.

May.1.2026 Copyright 2026 HIROSE ELECTRIC CO., LTD. All Rights Reserved.

Downloaded from Arrow.com.

Near End Cross-talk (NEXT)

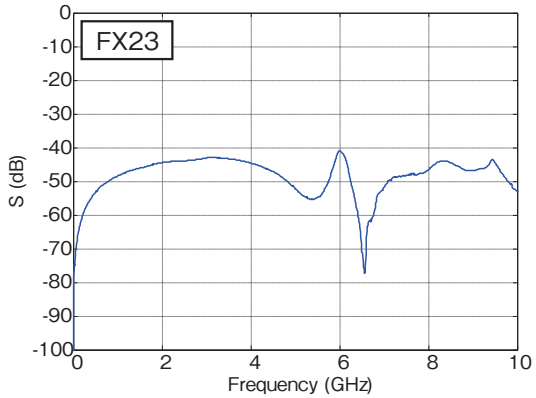

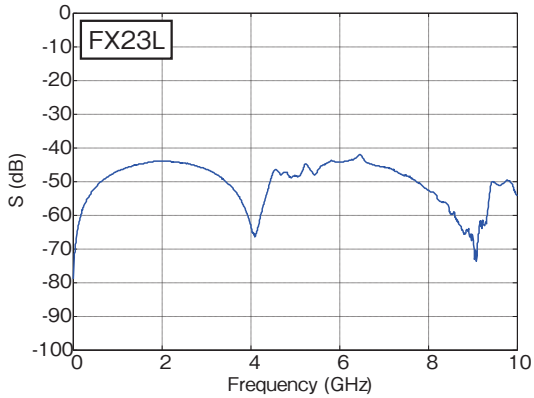

Far End Cross-talk (FEXT)

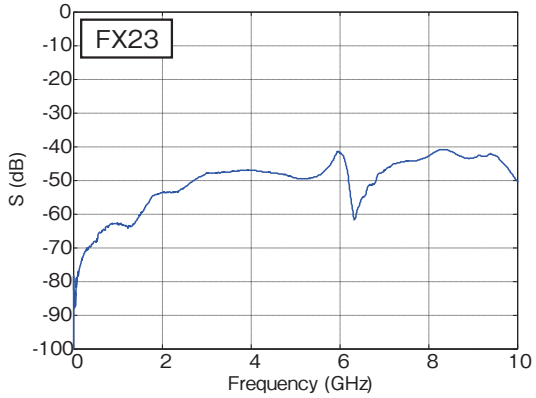

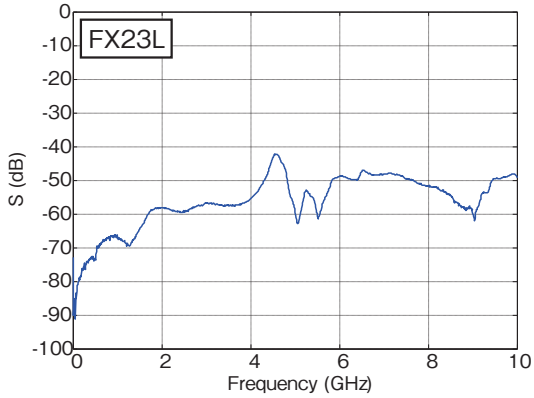

Low cross-talk up to 10GHz.

Insertion Loss/Cross-talk Ratio (ICR) for FEXT

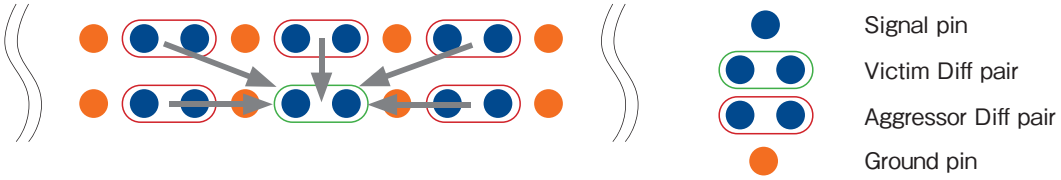

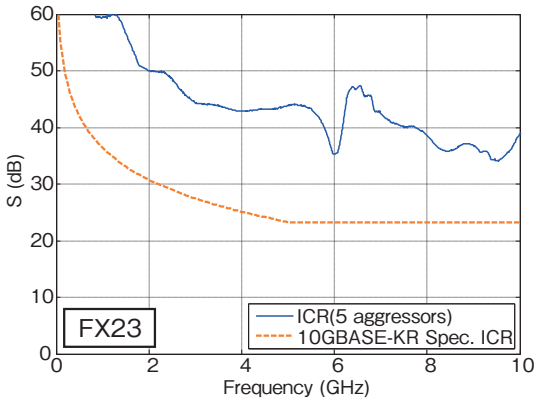

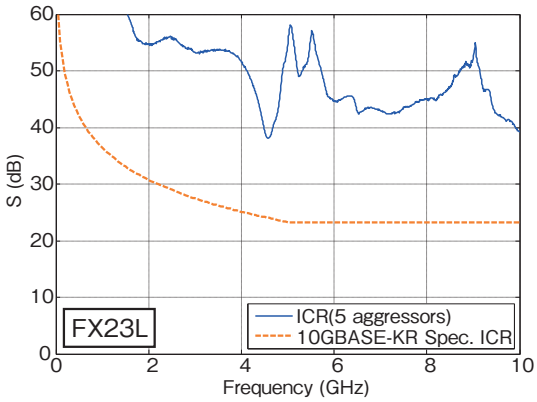

Insertion loss/cross-talk ratio (ICR) for FEXT using 5 sets of Aggressors has an adequate margin according to the specification of IEEE802.3ap.

May.1.2026 Copyright 2026 HIROSE ELECTRIC CO., LTD. All Rights Reserved.

Downloaded from Arrow.com.

Product Dimensions FX23 Series

● Straight Header [FX23-##P-0.5SV15]

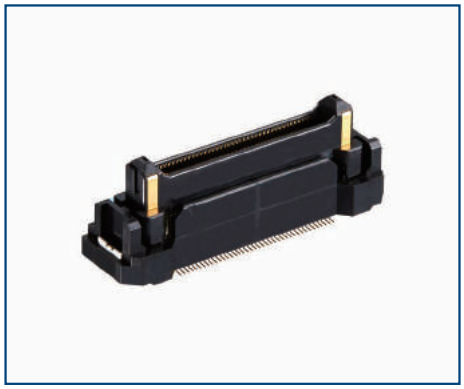

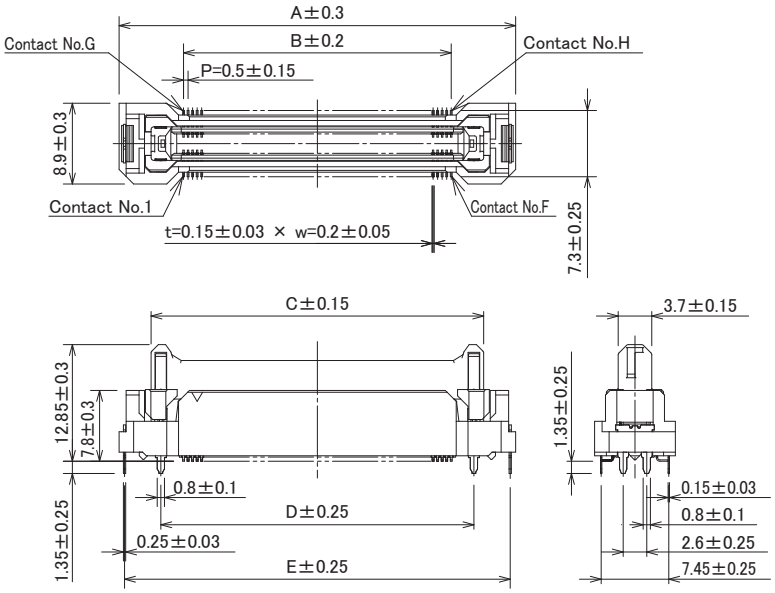

●Recommended PCB Layout

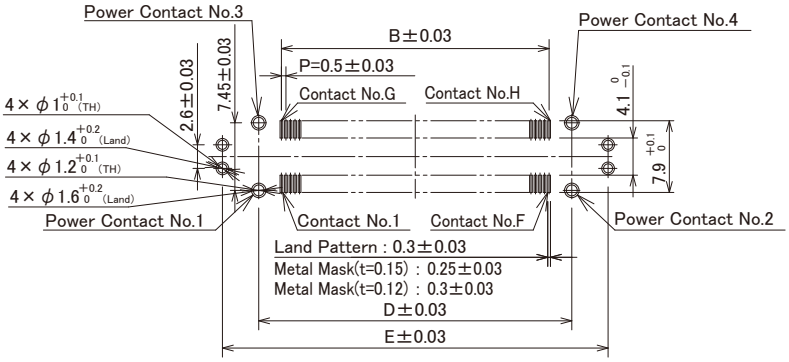

Unit : mm

Part No.	HRS No.	No. of Pos.	A	B	C	D	E	F	G	H
FX23-20P-0.5SV15(##)	CL0573-3001-0-##	20	18.7	4.5	11.65	9.5	17.5	10	11	20
FX23-40P-0.5SV15(##)	CL0573-3002-3-##	40	23.7	9.5	16.65	14.5	22.5	20	21	40
FX23-60P-0.5SV15(##)	CL0573-3003-6-##	60	28.7	14.5	21.65	19.5	27.5	30	31	60
FX23-80P-0.5SV15(##)	CL0573-3004-9-##	80	33.7	19.5	26.65	24.5	32.5	40	41	80
FX23-100P-0.5SV15(##)	CL0573-3005-1-##	100	38.7	24.5	31.65	29.5	37.5	50	51	100
FX23-120P-0.5SV15(##)	CL0573-3006-4-##	120	43.7	29.5	36.65	34.5	42.5	60	61	120

【Specification Number】(##), ##
(00) : Tray Packaging
(20) : Embossed Packaging

May.1.2026 Copyright 2026 HIROSE ELECTRIC CO., LTD. All Rights Reserved.

Downloaded from Arrow.com.

[FX23-##P-0.5SV20]

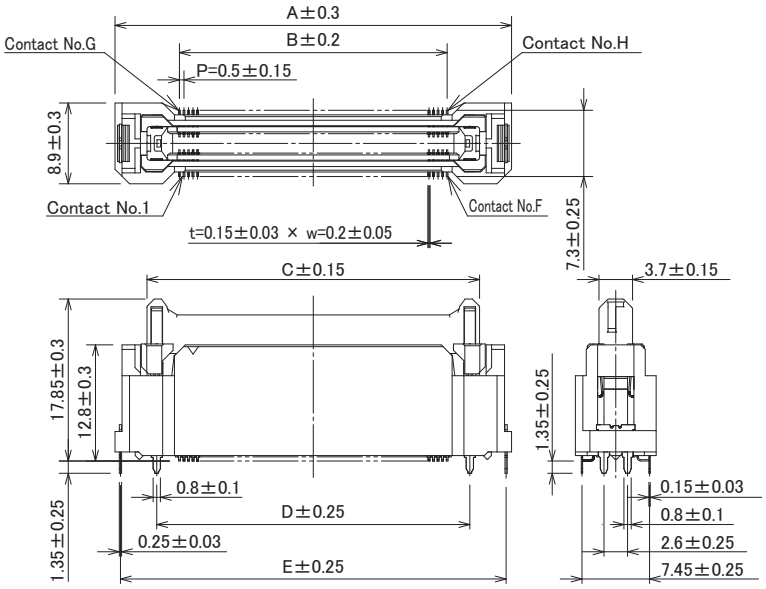

●Recommended PCB Layout

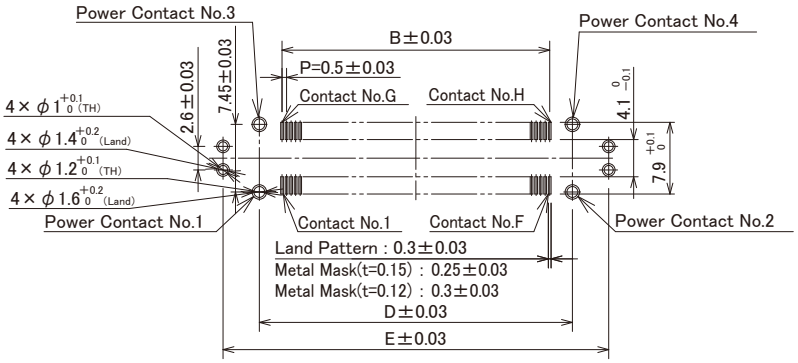

Unit : mm

Part No.	HRS No.	No. of Pos.	A	B	C	D	E	F	G	H
FX23-20P-0.5SV20(##)	CL0573-3101-5-##	20	18.7	4.5	11.65	9.5	17.5	10	11	20
FX23-40P-0.5SV20(##)	CL0573-3102-8-##	40	23.7	9.5	16.65	14.5	22.5	20	21	40
FX23-60P-0.5SV20(##)	CL0573-3103-0-##	60	28.7	14.5	21.65	19.5	27.5	30	31	60
FX23-80P-0.5SV20(##)	CL0573-3104-3-##	80	33.7	19.5	26.65	24.5	32.5	40	41	80
FX23-100P-0.5SV20(##)	CL0573-3105-6-##	100	38.7	24.5	31.65	29.5	37.5	50	51	100
FX23-120P-0.5SV20(##)	CL0573-3106-9-##	120	43.7	29.5	36.65	34.5	42.5	60	61	120

【Specification Number】(##), ##
(00) : Tray Packaging
(20) : Embossed Packaging

May.1.2026 Copyright 2026 HIROSE ELECTRIC CO., LTD. All Rights Reserved.

Downloaded from Arrow.com.

● Straight Receptacle [FX23-##S-0.5SV]

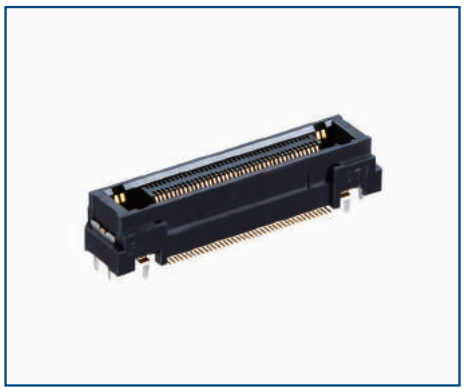

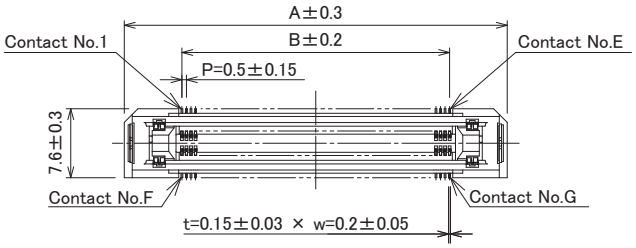

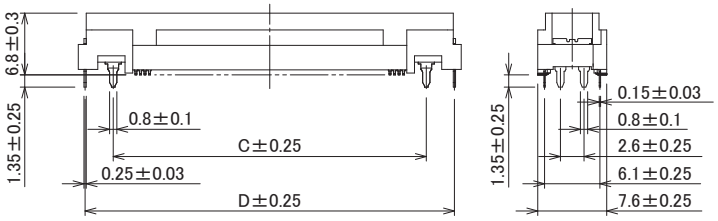

●Recommended PCB Layout

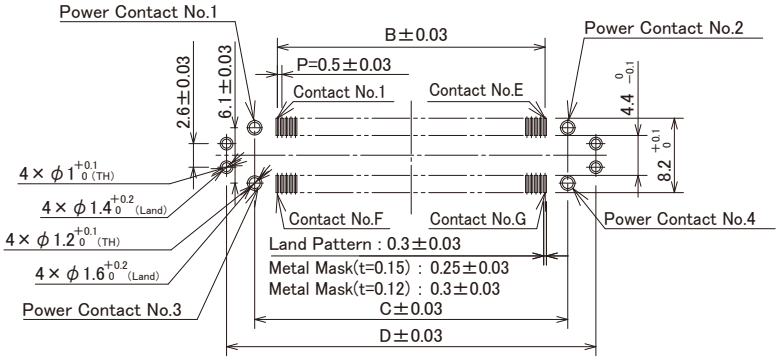

Unit : mm

Part No.	HRS No.	No. of Pos.	A	B	C	D	E	F	G
FX23-20S-0.5SV(##)	CL0573-3201-0-##	20	17.2	4.5	9.5	15.7	10	11	20
FX23-40S-0.5SV(##)	CL0573-3202-2-##	40	22.2	9.5	14.5	20.7	20	21	40
FX23-60S-0.5SV(##)	CL0573-3203-5-##	60	27.2	14.5	19.5	25.7	30	31	60
FX23-80S-0.5SV(##)	CL0573-3204-8-##	80	32.2	19.5	24.5	30.7	40	41	80
FX23-100S-0.5SV(##)	CL0573-3205-0-##	100	37.2	24.5	29.5	35.7	50	51	100
FX23-120S-0.5SV(##)	CL0573-3206-3-##	120	42.2	29.5	34.5	40.7	60	61	120

【Specification Number】(##), ##
(00) : Tray Packaging
(20) : Embossed Packaging

May.1.2026 Copyright 2026 HIROSE ELECTRIC CO., LTD. All Rights Reserved.

Downloaded from Arrow.com.

[FX23-##S-0.5SV10]

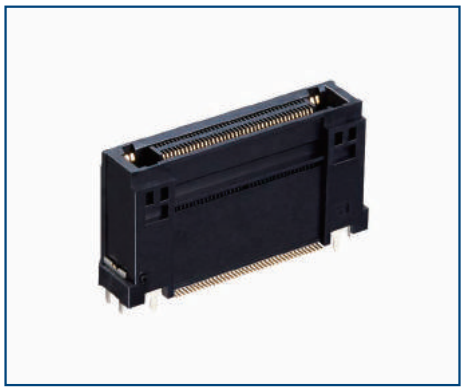

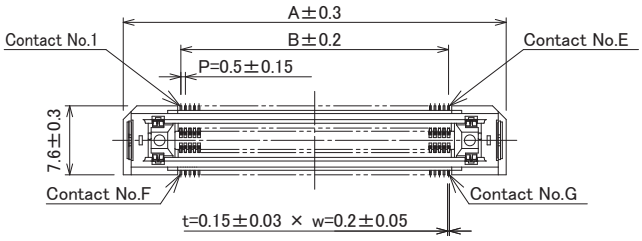

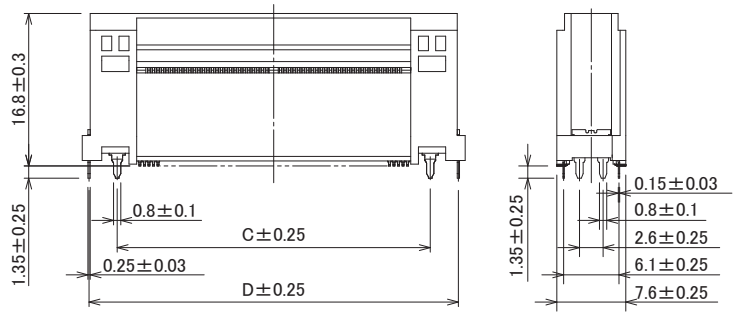

●Recommended PCB Layout

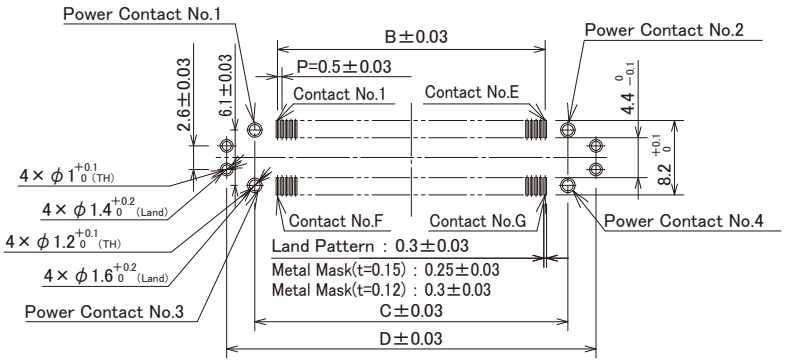

Unit : mm

Part No.	HRS No.	No. of Pos.	A	B	C	D	E	F	G
FX23-20S-0.5SV10(##)	CL0573-3301-4-##	20	17.2	4.5	9.5	15.7	10	11	20
FX23-40S-0.5SV10(##)	CL0573-3302-7-##	40	22.2	9.5	14.5	20.7	20	21	40
FX23-60S-0.5SV10(##)	CL0573-3303-0-##	60	27.2	14.5	19.5	25.7	30	31	60
FX23-80S-0.5SV10(##)	CL0573-3304-2-##	80	32.2	19.5	24.5	30.7	40	41	80
FX23-100S-0.5SV10(##)	CL0573-3305-5-##	100	37.2	24.5	29.5	35.7	50	51	100
FX23-120S-0.5SV10(##)	CL0573-3306-8-##	120	42.2	29.5	34.5	40.7	60	61	120

【Specification Number】(##), ##
(00) : Tray Packaging
(20) : Embossed Packaging

May.1.2026 Copyright 2026 HIROSE ELECTRIC CO., LTD. All Rights Reserved.

Downloaded from Arrow.com.

● Right Angle Receptacle [FX23-##S-0.5SH]

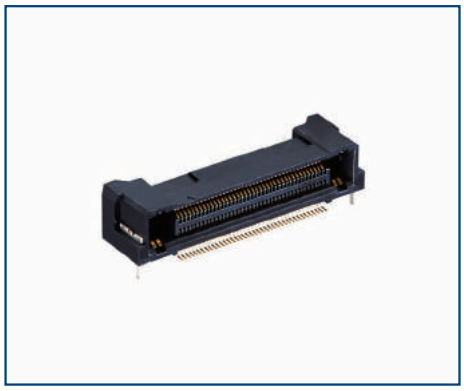

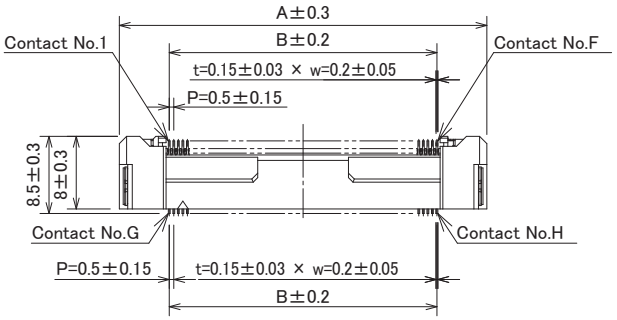

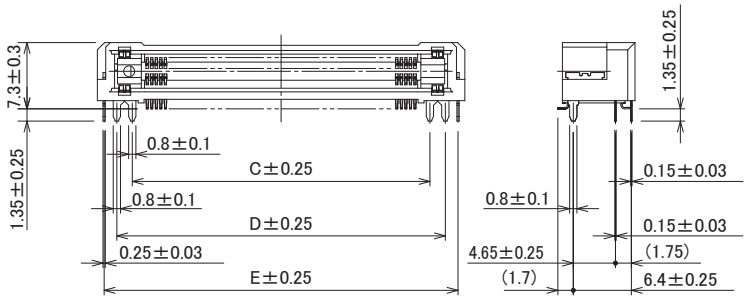

●Recommended PCB Layout

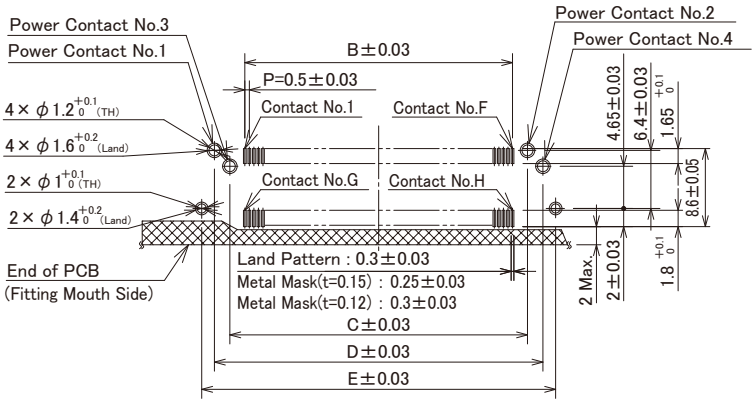

Unit : mm

Part No.	HRS No.	No. of Pos.	A	B	C	D	E	F	G	H
FX23-20S-0.5SH(##)	CL0573-3401-9-##	20	15.5	4.5	7.8	11.2	14	10	11	20
FX23-40S-0.5SH(##)	CL0573-3402-1-##	40	20.5	9.5	12.8	16.2	19	20	21	40
FX23-60S-0.5SH(##)	CL0573-3403-4-##	60	25.5	14.5	17.8	21.2	24	30	31	60
FX23-80S-0.5SH(##)	CL0573-3404-7-##	80	30.5	19.5	22.8	26.2	29	40	41	80
FX23-100S-0.5SH(##)	CL0573-3405-0-##	100	35.5	24.5	27.8	31.2	34	50	51	100
FX23-120S-0.5SH(##)	CL0573-3406-2-##	120	40.5	29.5	32.8	36.2	39	60	61	120

【Specification Number】(##), ##
(00) : Tray Packaging
(20) : Embossed Packaging

May.1.2026 Copyright 2026 HIROSE ELECTRIC CO., LTD. All Rights Reserved.

Downloaded from Arrow.com.

Product Dimensions FX23L Series

● Straight Header [FX23L-##P-0.5SV8]

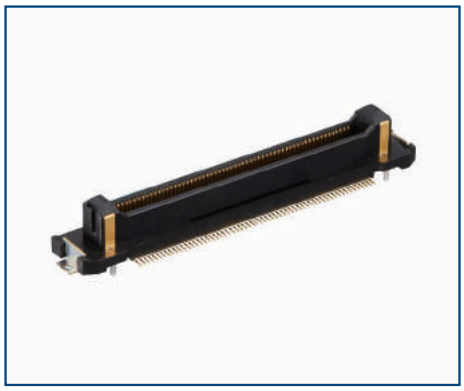

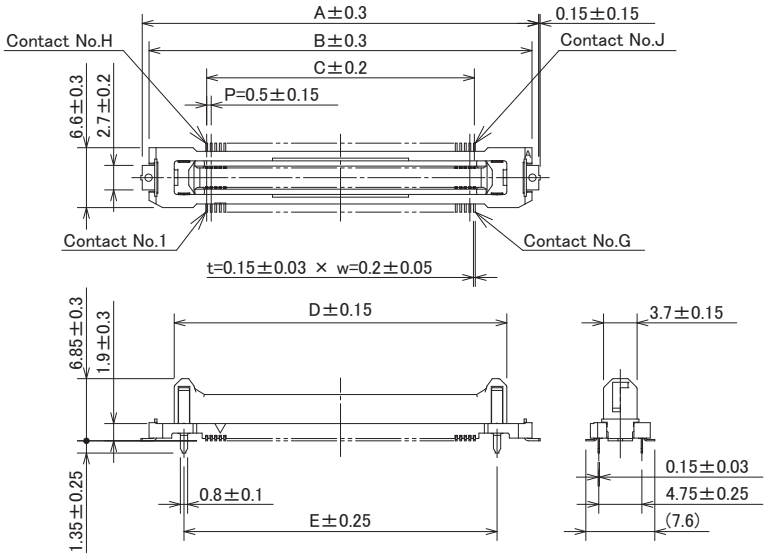

●Recommended PCB Layout

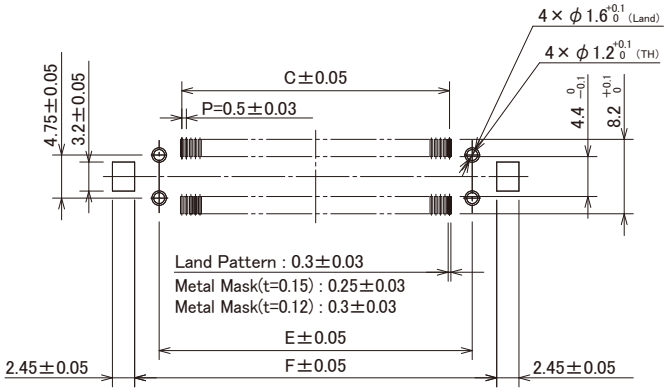

Unit : mm

Part No.	HRS No.	No. of Pos.	A	B	C	D	E	F	G	H	J
FX23L-20P-0.5SV8(##)	CL0573-2001-5-##	20	18.7	17.2	4.5	11.65	9.5	14.9	10	11	20
FX23L-40P-0.5SV8(##)	CL0573-2002-8-##	40	23.7	22.2	9.5	16.65	14.5	19.9	20	21	40
FX23L-60P-0.5SV8(##)	CL0573-2003-0-##	60	28.7	27.2	14.5	21.65	19.5	24.9	30	31	60
FX23L-80P-0.5SV8(##)	CL0573-2004-3-##	80	33.7	32.2	19.5	26.65	24.5	29.9	40	41	80
FX23L-100P-0.5SV8(##)	CL0573-2005-6-##	100	38.7	37.2	24.5	31.65	29.5	34.9	50	51	100
FX23L-120P-0.5SV8(##)	CL0573-2006-9-##	120	43.7	42.2	29.5	36.65	34.5	39.9	60	61	120

【Specification Number】(##), ##
(00) : Tray Packaging
(20) : Embossed Packaging

May.1.2026 Copyright 2026 HIROSE ELECTRIC CO., LTD. All Rights Reserved.

Downloaded from Arrow.com.

[FX23L-##P-0.5SV10]

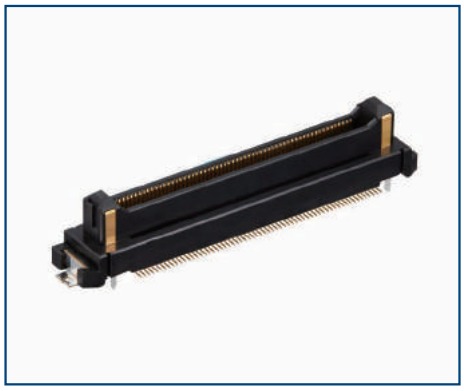

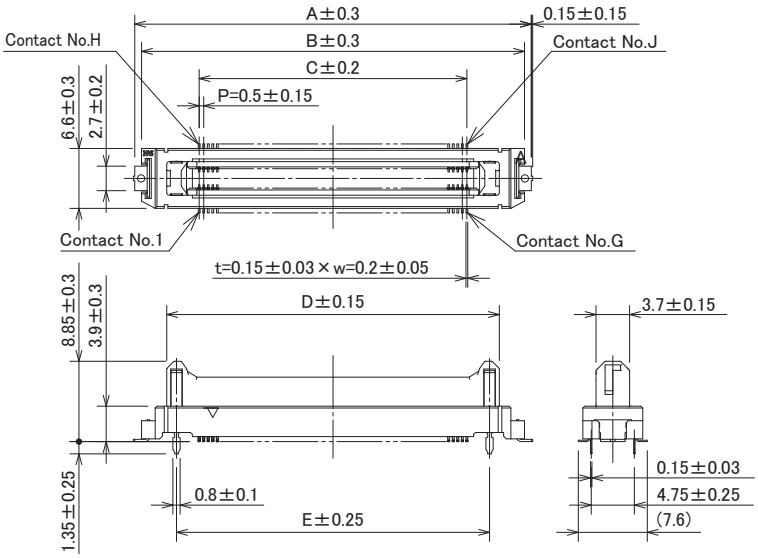

●Recommended PCB Layout

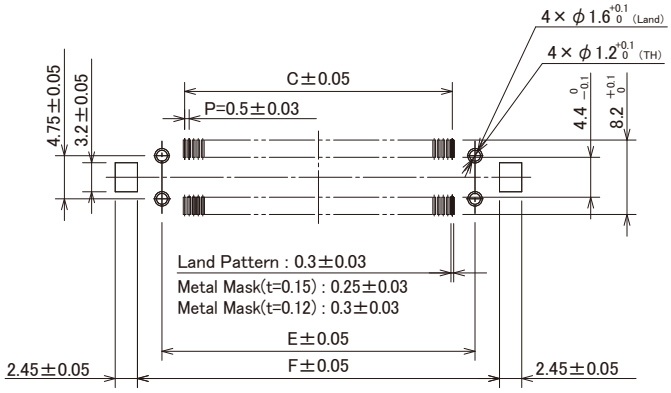

Unit : mm

Part No.	HRS No.	No. of Pos.	A	B	C	D	E	F	G	H	J
FX23L-20P-0.5SV10(##)	CL0573-2101-0-##	20	18.7	17.2	4.5	11.65	9.5	14.9	10	11	20
FX23L-40P-0.5SV10(##)	CL0573-2102-2-##	40	23.7	22.2	9.5	16.65	14.5	19.9	20	21	40
FX23L-60P-0.5SV10(##)	CL0573-2103-5-##	60	28.7	27.2	14.5	21.65	19.5	24.9	30	31	60
FX23L-80P-0.5SV10(##)	CL0573-2104-8-##	80	33.7	32.2	19.5	26.65	24.5	29.9	40	41	80
FX23L-100P-0.5SV10(##)	CL0573-2105-0-##	100	38.7	37.2	24.5	31.65	29.5	34.9	50	51	100
FX23L-120P-0.5SV10(##)	CL0573-2106-3-##	120	43.7	42.2	29.5	36.65	34.5	39.9	60	61	120

【Specification Number】(##), ##
(00) : Tray Packaging
(20) : Embossed Packaging

May.1.2026 Copyright 2026 HIROSE ELECTRIC CO., LTD. All Rights Reserved.

Downloaded from Arrow.com.

[FX23L-##P-0.5SV12]

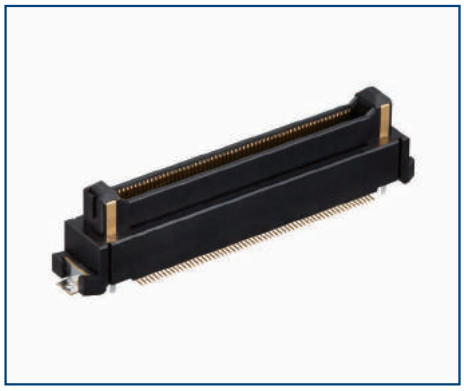

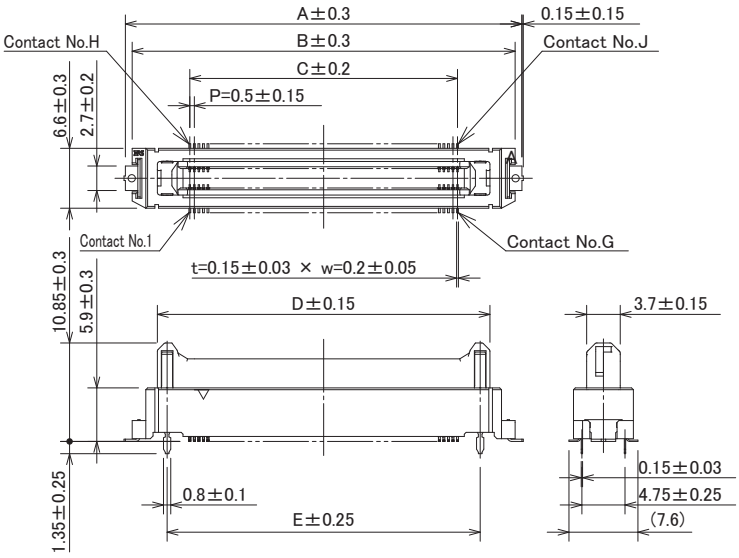

●Recommended PCB Layout

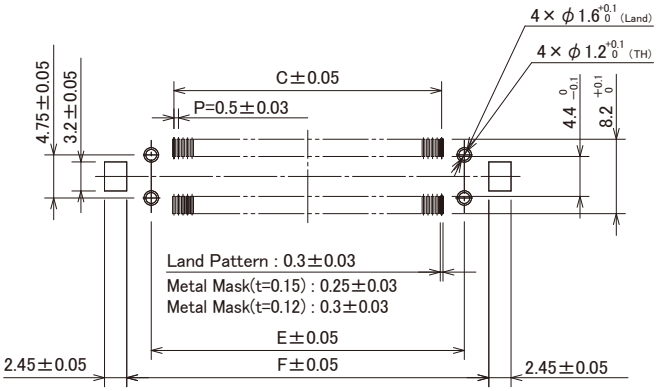

Unit : mm

Part No.	HRS No.	No. of Pos.	A	B	C	D	E	F	G	H	J
FX23L-20P-0.5SV12(##)	CL0573-2201-4-##	20	18.7	17.2	4.5	11.65	9.5	14.9	10	11	20
FX23L-40P-0.5SV12(##)	CL0573-2202-7-##	40	23.7	22.2	9.5	16.65	14.5	19.9	20	21	40
FX23L-60P-0.5SV12(##)	CL0573-2203-0-##	60	28.7	27.2	14.5	21.65	19.5	24.9	30	31	60
FX23L-80P-0.5SV12(##)	CL0573-2204-2-##	80	33.7	32.2	19.5	26.65	24.5	29.9	40	41	80
FX23L-100P-0.5SV12(##)	CL0573-2205-5-##	100	38.7	37.2	24.5	31.65	29.5	34.9	50	51	100
FX23L-120P-0.5SV12(##)	CL0573-2206-8-##	120	43.7	42.2	29.5	36.65	34.5	39.9	60	61	120

【Specification Number】(##), ##
(00) : Tray Packaging
(20) : Embossed Packaging

May.1.2026 Copyright 2026 HIROSE ELECTRIC CO., LTD. All Rights Reserved.

Downloaded from Arrow.com.

● Straight Receptacle [FX23L-##S-0.5SV]

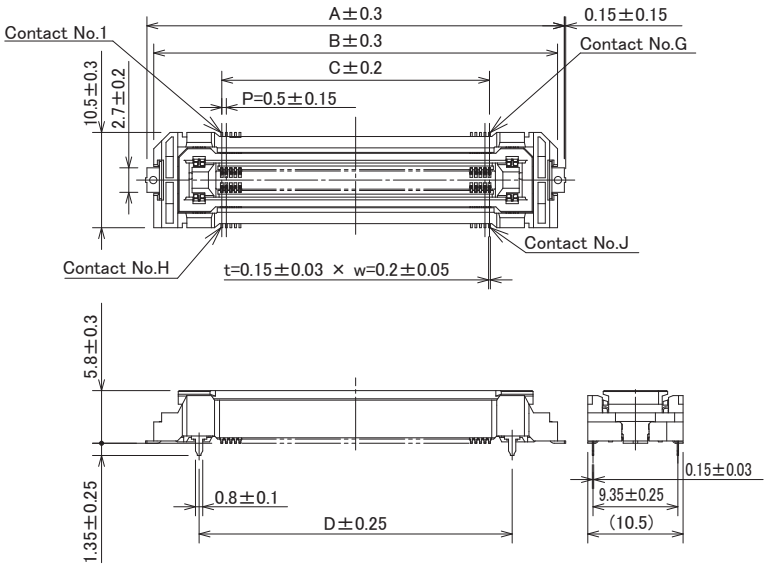

●Recommended PCB Layout

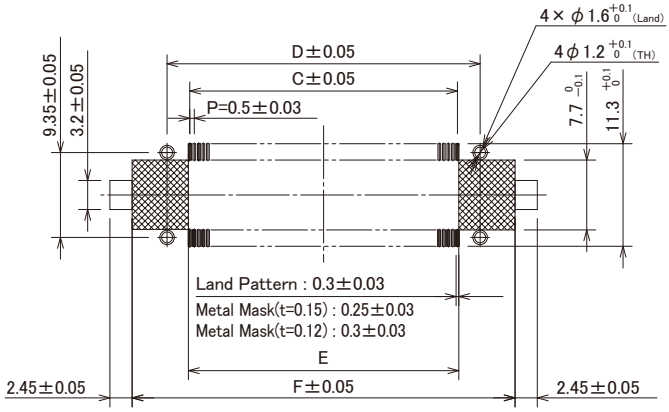

Unit : mm

Part No.	HRS No.	No. of Pos.	A	B	C	D	E	F	G	H	J
FX23L-20S-0.5SV(##)	CL0573-2301-9-##	20	21	19.5	4.5	9.5	4.8	17.2	10	11	20
FX23L-40S-0.5SV(##)	CL0573-2302-1-##	40	26	24.5	9.5	14.5	9.8	22.2	20	21	40
FX23L-60S-0.5SV(##)	CL0573-2303-4-##	60	31	29.5	14.5	19.5	14.8	27.2	30	31	60
FX23L-80S-0.5SV(##)	CL0573-2304-7-##	80	36	34.5	19.5	24.5	19.8	32.2	40	41	80
FX23L-100S-0.5SV(##)	CL0573-2305-0-##	100	41	39.5	24.5	29.5	24.8	37.2	50	51	100
FX23L-120S-0.5SV(##)	CL0573-2306-2-##	120	46	44.5	29.5	34.5	29.8	42.2	60	61	120

【Specification Number】(##), ##
(00) : Tray Packaging
(20) : Embossed Packaging

May.1.2026 Copyright 2026 HIROSE ELECTRIC CO., LTD. All Rights Reserved.

Downloaded from Arrow.com.

Packaging Specifications

Tray Packaging for FX23

● Straight Header

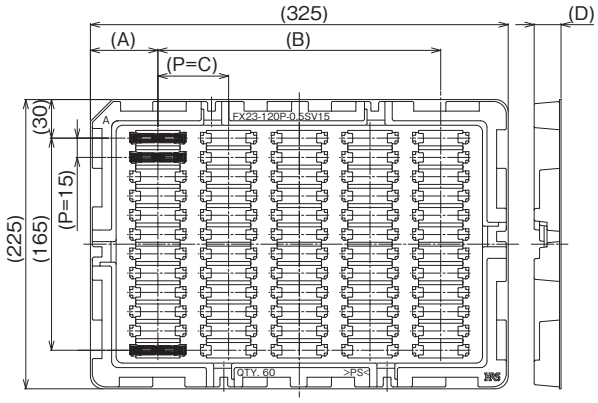

Unit : mm

Part No.	Packing Quantity (pcs/tray)	A	B	C	D
FX23-20P-0.5SV15	84	50	225	37.5	20.9
FX23-40P-0.5SV15	84	50	225	37.5	20.9
FX23-60P-0.5SV15	84	50	225	37.5	20.9
FX23-80P-0.5SV15	72	50	225	45	20.9
FX23-100P-0.5SV15	72	47.5	230	46	20.9
FX23-120P-0.5SV15	60	52.5	220	55	20.9
FX23-20P-0.5SV20	84	50	225	37.5	25.9
FX23-40P-0.5SV20	84	50	225	37.5	25.9
FX23-60P-0.5SV20	84	50	225	37.5	25.9
FX23-80P-0.5SV20	72	47.5	230	46	25.9
FX23-100P-0.5SV20	72	47.5	230	46	25.9
FX23-120P-0.5SV20	60	52.5	220	55	25.9

Note : Order tray packaging in multiples of purchase unit.

May.1.2026 Copyright 2026 HIROSE ELECTRIC CO., LTD. All Rights Reserved.

Downloaded from Arrow.com.

● Straight Receptacle

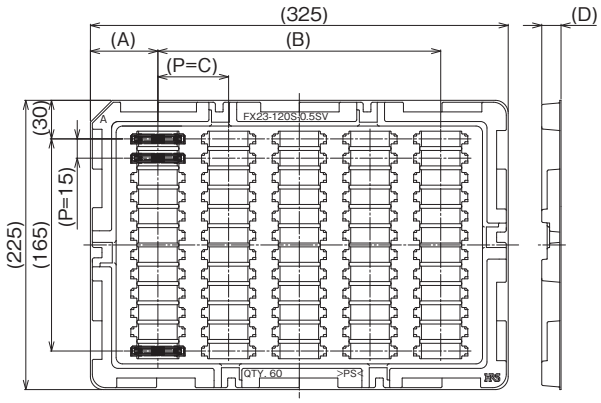

Unit : mm

Part No.	Packing Quantity (pcs/tray)	A	B	C	D
FX23-20S-0.5SV	84	50	225	37.5	15
FX23-40S-0.5SV	84	50	225	37.5	15
FX23-60S-0.5SV	84	50	225	37.5	15
FX23-80S-0.5SV	72	47.5	230	46	15
FX23-100S-0.5SV	72	47.5	230	46	15
FX23-120S-0.5SV	60	52.5	220	55	15
FX23-20S-0.5SV10	84	50	225	37.5	25.2
FX23-40S-0.5SV10	84	50	225	37.5	25.2
FX23-60S-0.5SV10	84	50	225	37.5	25.2
FX23-80S-0.5SV10	72	47.5	230	46	25.2
FX23-100S-0.5SV10	72	47.5	230	46	25.2
FX23-120S-0.5SV10	60	52.5	220	55	25.2

Note : Order tray packaging in multiples of purchase unit.

● Right Angle Receptacle

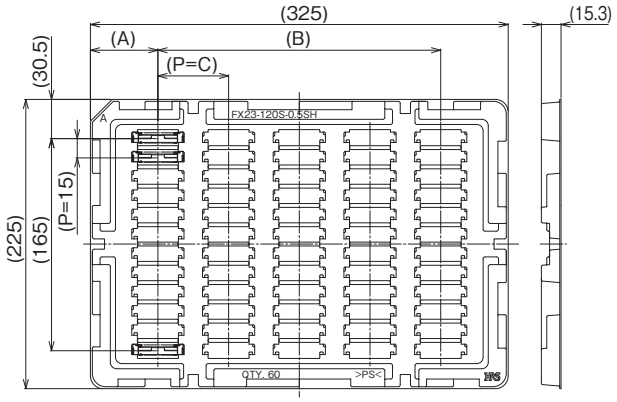

Unit : mm

Part No.	Packing Quantity (pcs/tray)	A	B	C
FX23-20S-0.5SH	84	50	225	37.5
FX23-40S-0.5SH	84	50	225	37.5
FX23-60S-0.5SH	84	50	225	37.5
FX23-80S-0.5SH	72	50	225	45
FX23-100S-0.5SH	72	47.5	230	46
FX23-120S-0.5SH	60	52.5	220	55

Note : Order tray packaging in multiples of purchase unit.

May.1.2026 Copyright 2026 HIROSE ELECTRIC CO., LTD. All Rights Reserved.

Downloaded from Arrow.com.

Tray Packaging for FX23L

● Straight Header

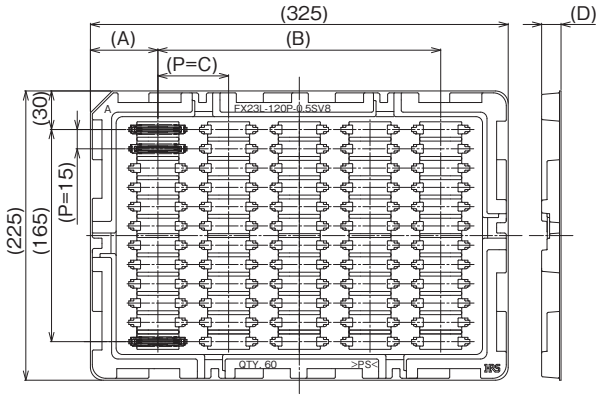

Unit : mm

Part No.	Packing Quantity (pcs/tray)	A	B	C	D
FX23L-20P-0.5SV8	96	40	245	35	15.1
FX23L-40P-0.5SV8	84	50	225	37.5	15.1
FX23L-60P-0.5SV8	72	50	225	45	15.1
FX23L-80P-0.5SV8	72	50	225	45	15.1
FX23L-100P-0.5SV8	60	52.5	220	55	15.1
FX23L-120P-0.5SV8	60	52.5	220	55	15.1
FX23L-20P-0.5SV10	96	40	245	35	17.1
FX23L-40P-0.5SV10	84	50	225	37.5	17.1
FX23L-60P-0.5SV10	72	50	225	45	17.1
FX23L-80P-0.5SV10	72	50	225	45	17.1
FX23L-100P-0.5SV10	60	52.5	220	55	17.1
FX23L-120P-0.5SV10	60	52.5	220	55	17.1
FX23L-20P-0.5SV12	96	40	245	35	19.1
FX23L-40P-0.5SV12	84	50	225	37.5	19.1
FX23L-60P-0.5SV12	72	50	225	45	19.1
FX23L-80P-0.5SV12	72	50	225	45	19.1
FX23L-100P-0.5SV12	60	52.5	220	55	19.1
FX23L-120P-0.5SV12	60	52.5	220	55	19.1

Note : Order tray packaging in multiples of purchase unit.

May.1.2026 Copyright 2026 HIROSE ELECTRIC CO., LTD. All Rights Reserved.

Downloaded from Arrow.com.

● Straight Receptacle

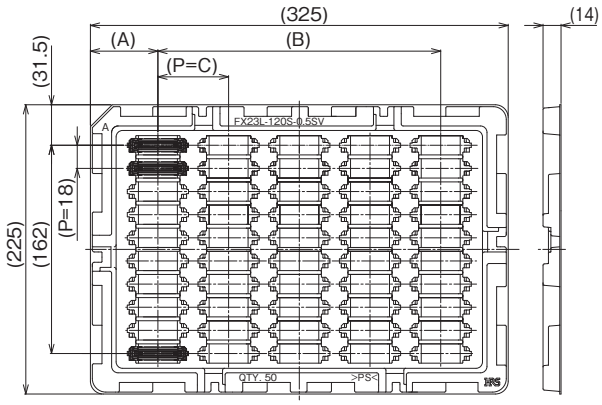

Unit : mm

Part No.	Packing Quantity (pcs/tray)	A	B	C
FX23L-20S-0.5SV	90	38.5	248	31
FX23L-40S-0.5SV	80	40	245	35
FX23L-60S-0.5SV	70	42.5	240	40
FX23L-80S-0.5SV	60	47.5	230	46
FX23L-100S-0.5SV	50	52.5	220	55
FX23L-120S-0.5SV	50	52.5	220	55

Note : Order tray packaging in multiples of purchase unit.

May.1.2026 Copyright 2026 HIROSE ELECTRIC CO., LTD. All Rights Reserved.

Downloaded from Arrow.com.

Embossed Carrier Tape Dimensions for FX23

● Straight Header

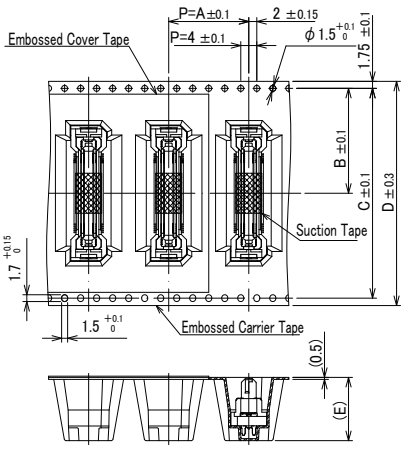

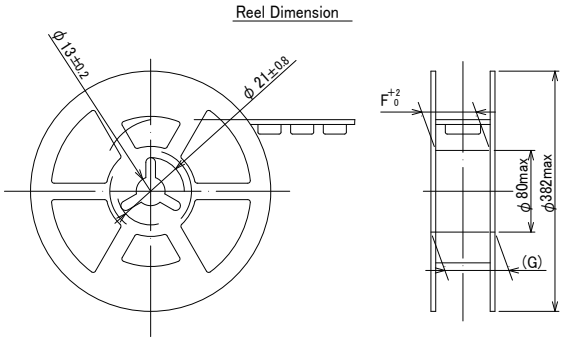

Unit : mm

Part No.	Packing Quantity (pcs/reel)	A	B	C	D	E	F	G
FX23-20P-0.5SV15(20)	250	20	20.2	40.4	44	15.8	44.4	50.4
FX23-40P-0.5SV15(20)	250	20	20.2	40.4	44	15.8	44.4	50.4
FX23-60P-0.5SV15(20)	250	20	20.2	40.4	44	15.8	44.4	50.4
FX23-80P-0.5SV15(20)	250	20	26.2	52.4	56	15.8	56.4	62.4
FX23-100P-0.5SV15(20)	250	20	26.2	52.4	56	15.8	56.4	62.4
FX23-120P-0.5SV15(20)	250	20	34.2	68.4	72	15.8	72.4	78.4
FX23-20P-0.5SV20(20)	150	24	20.2	40.4	44	20.45	44.4	50.4
FX23-40P-0.5SV20(20)	150	24	20.2	40.4	44	20.45	44.4	50.4
FX23-60P-0.5SV20(20)	150	24	26.2	52.4	56	20.45	56.4	62.4
FX23-80P-0.5SV20(20)	150	24	26.2	52.4	56	20.45	56.4	62.4
FX23-100P-0.5SV20(20)	150	24	26.2	52.4	56	20.45	56.4	62.4
FX23-120P-0.5SV20(20)	150	24	34.2	68.4	72	20.45	72.4	78.4

May.1.2026 Copyright 2026 HIROSE ELECTRIC CO., LTD. All Rights Reserved.

Downloaded from Arrow.com.

Straight Receptacle

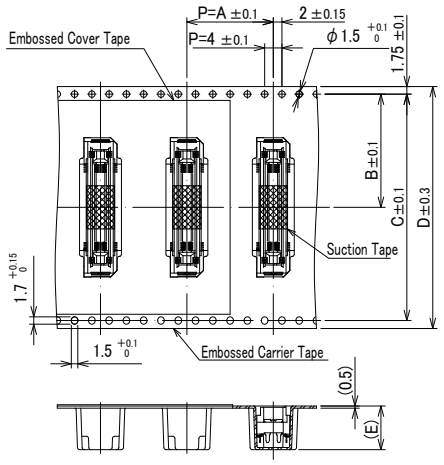

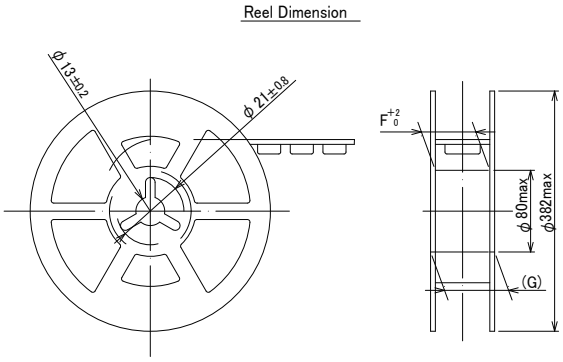

Unit : mm

Part No.	Packing Quantity (pcs/reel)	A	B	C	D	E	F	G
FX23-20S-0.5SV(20)	400	20	14.2	28.4	32	10.10	32.4	38.4
FX23-40S-0.5SV(20)	400	20	20.2	40.4	44	10.10	44.4	50.4
FX23-60S-0.5SV(20)	400	20	20.2	40.4	44	10.10	44.4	50.4
FX23-80S-0.5SV(20)	400	20	26.2	52.4	56	10.10	56.4	62.4
FX23-100S-0.5SV(20)	400	20	26.2	52.4	56	10.10	56.4	62.4
FX23-120S-0.5SV(20)	400	20	26.2	52.4	56	10.10	56.4	62.4
FX23-20S-0.5SV10(20)	150	24	20.2	40.4	44	19.85	44.4	50.4
FX23-40S-0.5SV10(20)	150	24	20.2	40.4	44	19.85	44.4	50.4
FX23-60S-0.5SV10(20)	150	24	26.2	52.4	56	19.85	56.4	62.4
FX23-80S-0.5SV10(20)	150	24	26.2	52.4	56	19.85	56.4	62.4
FX23-100S-0.5SV10(20)	150	24	26.2	52.4	56	19.85	56.4	62.4
FX23-120S-0.5SV10(20)	150	24	34.2	68.4	72	19.85	72.4	78.4

May.1.2026 Copyright 2026 HIROSE ELECTRIC CO., LTD. All Rights Reserved.

Downloaded from Arrow.com.

● Right Angle Receptacle

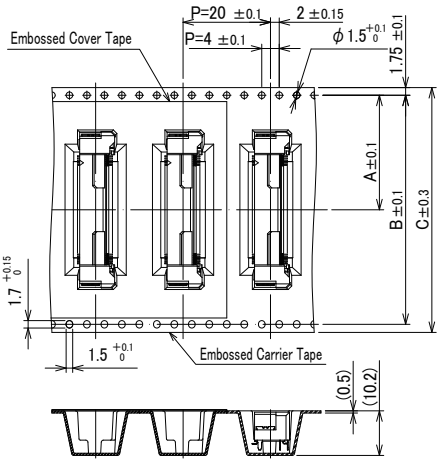

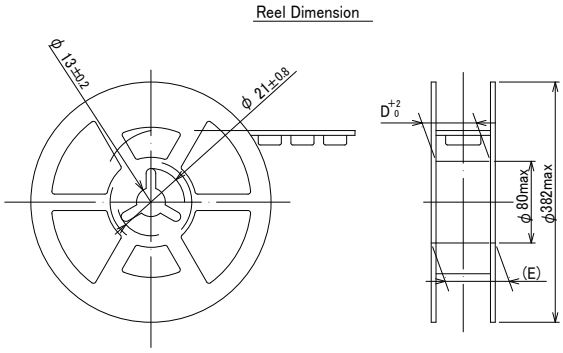

Unit : mm

Part No.	Packing Quantity (pcs/reel)	A	B	C	D	E
FX23-20S-0.5SH(20)	400	14.2	28.4	32	32.4	38.4
FX23-40S-0.5SH(20)	400	20.2	40.4	44	44.4	50.4
FX23-60S-0.5SH(20)	400	20.2	40.4	44	44.4	50.4
FX23-80S-0.5SH(20)	400	20.2	40.4	44	44.4	50.4
FX23-100S-0.5SH(20)	400	26.2	52.4	56	56.4	62.4
FX23-120S-0.5SH(20)	400	26.2	52.4	56	56.4	62.4

May.1.2026 Copyright 2026 HIROSE ELECTRIC CO., LTD. All Rights Reserved.

Downloaded from Arrow.com.

Embossed Carrier Tape Dimensions for FX23L

● Straight Header

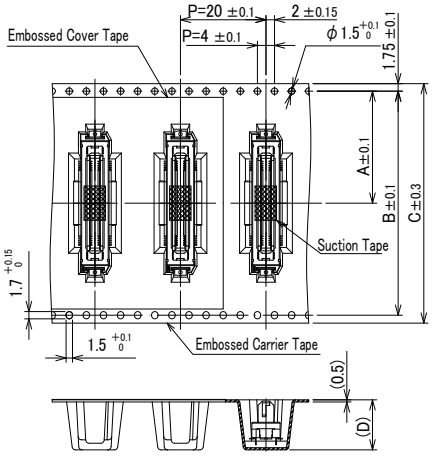

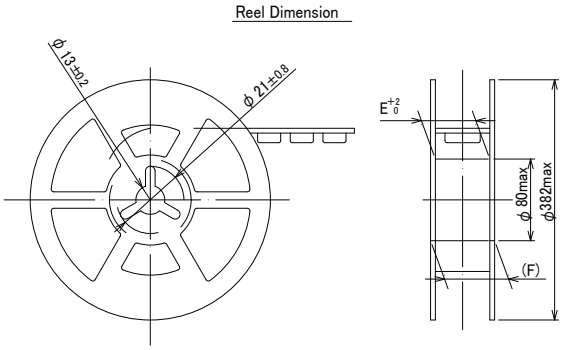

Unit : mm

Part No.	Packing Quantity (pcs/reel)	A	B	C	D	E	F
FX23L-20P-0.5SV8(20)	450	20.2	40.4	44	9.7	44.4	50.4
FX23L-40P-0.5SV8(20)	450	20.2	40.4	44	9.7	44.4	50.4
FX23L-60P-0.5SV8(20)	-	-	-	-	-	-	-
FX23L-80P-0.5SV8(20)	-	-	-	-	-	-	-
FX23L-100P-0.5SV8(20)	450	26.2	52.4	56	9.7	56.4	62.4
FX23L-120P-0.5SV8(20)	-	-	-	-	-	-	-
FX23L-20P-0.5SV10(20)	350	20.2	40.4	44	11.7	44.4	50.4
FX23L-40P-0.5SV10(20)	350	20.2	40.4	44	11.7	44.4	50.4
FX23L-60P-0.5SV10(20)	350	26.2	52.4	56	11.7	56.4	62.4
FX23L-80P-0.5SV10(20)	350	26.2	52.4	56	11.7	56.4	62.4
FX23L-100P-0.5SV10(20)	350	26.2	52.4	56	11.7	56.4	62.4
FX23L-120P-0.5SV10(20)	-	-	-	-	-	-	-
FX23L-20P-0.5SV12(20)	300	20.2	40.4	44	13.7	44.4	50.4
FX23L-40P-0.5SV12(20)	300	20.2	40.4	44	13.7	44.4	50.4
FX23L-60P-0.5SV12(20)	300	26.2	52.4	56	13.7	56.4	62.4
FX23L-80P-0.5SV12(20)	-	-	-	-	-	-	-
FX23L-100P-0.5SV12(20)	-	-	-	-	-	-	-
FX23L-120P-0.5SV12(20)	-	-	-	-	-	-	-

Note : For item whose dimensions are "-", please contact our sales representative.

May.1.2026 Copyright 2026 HIROSE ELECTRIC CO., LTD. All Rights Reserved.

Downloaded from Arrow.com.

● Straight Receptacle

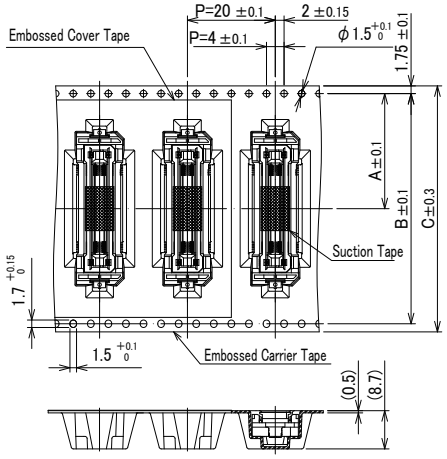

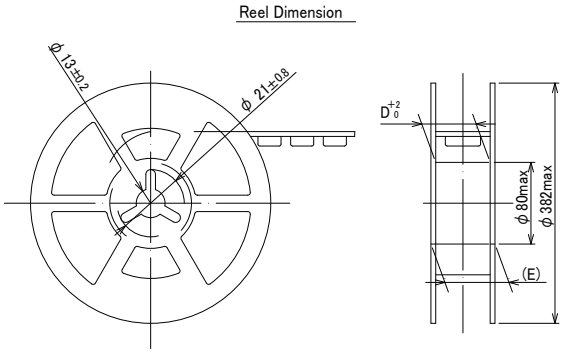

Unit : mm

Part No.	Packing Quantity (pcs/reel)	A	B	C	D	E
FX23L-20S-0.5SV(20)	500	20.2	40.4	44	44.4	50.4
FX23L-40S-0.5SV(20)	500	20.2	40.4	44	44.4	50.4
FX23L-60S-0.5SV(20)	500	26.2	52.4	56	56.4	62.4
FX23L-80S-0.5SV(20)	500	26.2	52.4	56	56.4	62.4
FX23L-100S-0.5SV(20)	500	26.2	52.4	56	56.4	62.4
FX23L-120S-0.5SV(20)	-	-	-	-	-	-

Note : For item whose dimensions are "-", please contact our sales representative.

May.1.2026 Copyright 2026 HIROSE ELECTRIC CO., LTD. All Rights Reserved.

Downloaded from Arrow.com.

Storing FX23 Series

There are two types of trays (A and B) for the FX23 Series.
These have been designed to stack in alternating order (A-B-A-B...) for shipping and storage.

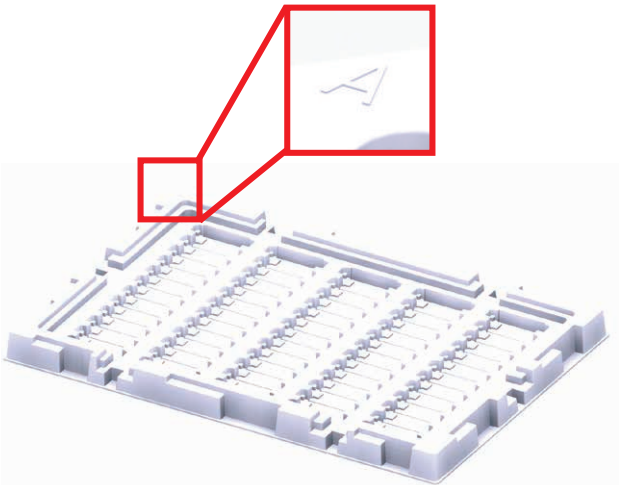

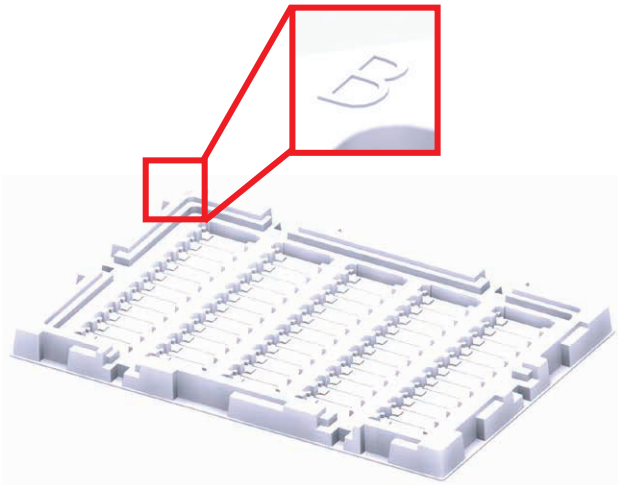

If tray A is stacked on top of another tray A, or if tray B is stacked on top of another tray B, the trays will put a load on the connectors, potentially causing connector breakage or deformation.

OK

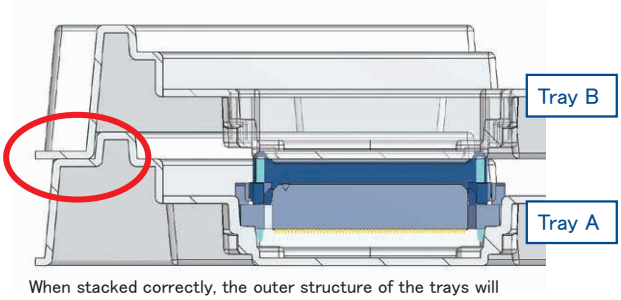

When stacked correctly, the outer structure of the trays will prevent any load from being placed on the connectors below.

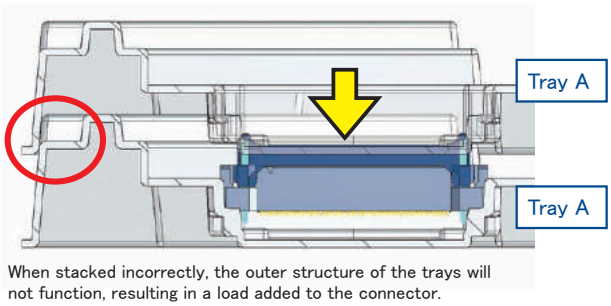

When stacked incorrectly, the outer structure of the trays will not function, resulting in a load added to the connector.

When storing the FX23 Series, please ensure that the trays are stacked in alternating order.

May.1.2026 Copyright 2026 HIROSE ELECTRIC CO., LTD. All Rights Reserved.

Downloaded from Arrow.com.

Recommended Temperature Profile

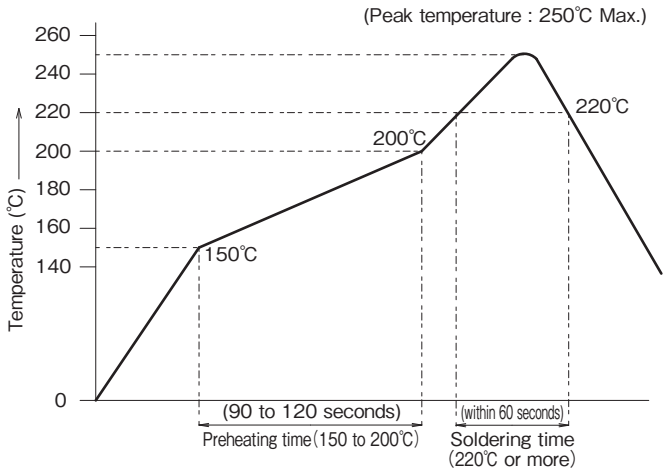

< Applicable Conditions >

Test PCB Dimensions	: 110 × 60 × 1.6mm
Material	: Glass epoxy
Solder Composition	: Sn-3Ag-0.5Cu
Flux Content	: 11wt%
Metal Mask Thickness	: 0.12mm, 0.15mm
Number of Reflow Times	: 2 times Max.

*The temperature profile is a reference under the condition of the above settings : Temperature profile may change depending on solder paste types, manufacturers, PCB size, and other soldering materials. Please fully check the mounting conditions before use.

Cleaning Conditions

● Cleaning with Organic Solvent

Solvent	Cleaning at Normal Temperature	Heated Cleaning
IPA (Isopropyl alcohol)	○	○

● Cleaning with Water

When water-type cleaning agents (terpene, alkaline saponification agents) are used, select cleaning agents based on the 'Table of Influence' on metals and resins issued by the cleaning agent manufacturer.
Caution : Do not leave with any water content left.

● Cleaning Precautions

When cleaning the parts with organic solvents and water-type agents, if flux or cleaning agents remain in the connector, it could cause the deterioration of electric performance. Please be sure to check if adequate cleaning has been carried out.

May.1.2026 Copyright 2026 HIROSE ELECTRIC CO., LTD. All Rights Reserved.

Downloaded from Arrow.com.

Usage Precautions

● About the Specified Dimension Between PCBs

The dimension between PCBs shall be within the following range :

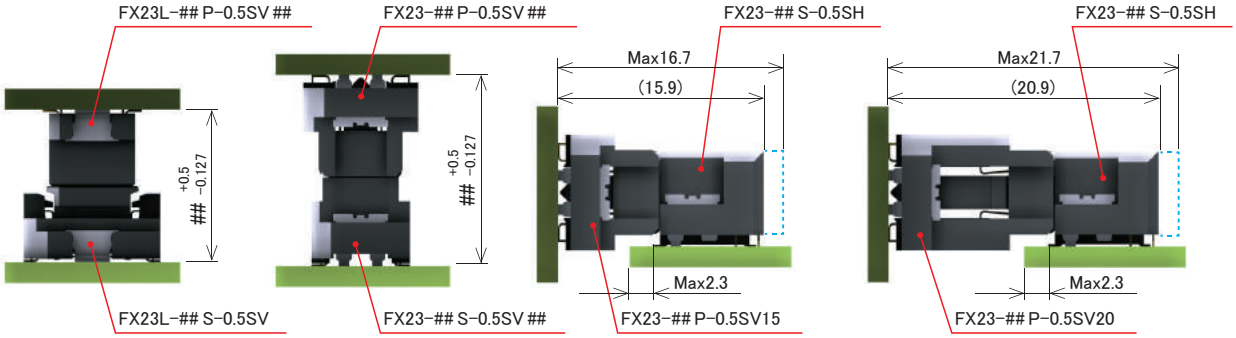

: Stacking Height

● Securing PCBs

Please take measures to secure the PCB other than using connectors. Using only the connectors to support the board may result in a load to the connector that results in damage or contact failure.

● Cautions in Mating Operations

・ This connector is designed to prevent reverse insertion. The connector could be damaged if excessive force is exerted when mating.
Avoid excessive force when mating. Mate only after confirming the following connector properties (chamfer of the external face) :

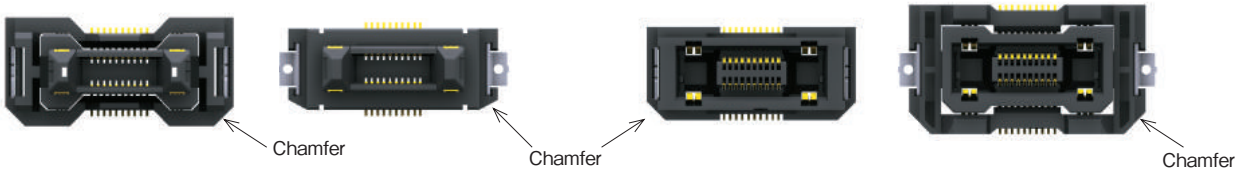

Header Side　　Receptacle Side

・ The self-alignment range is ±1.2mm in both the X and Y directions. After beginning to mate the connectors within the misalignment range, proceed by mating in a straight line without forcing the connector.

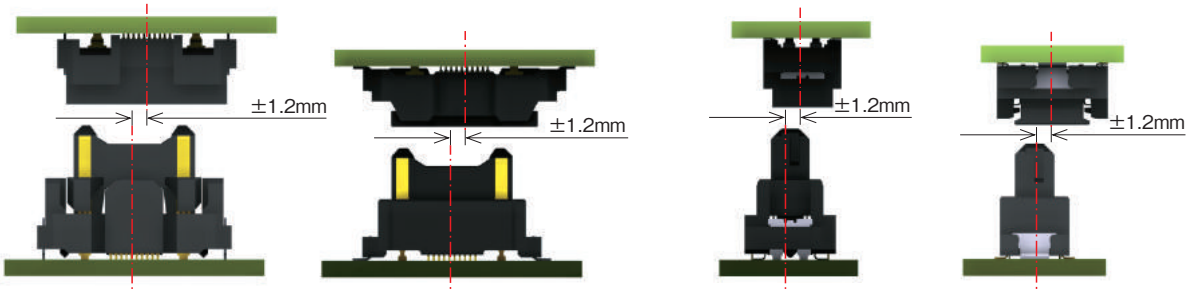

X Direction (Longitudinal Direction)　　Y Direction (Transverse Direction)

May.1.2026 Copyright 2026 HIROSE ELECTRIC CO., LTD. All Rights Reserved.

Downloaded from Arrow.com.

・ When mating/un-mating, it is strongly recommended to insert or remove in a straight line. If not possible due to board layout, insertion and removal should be carried out within the following inclination angle.
Moreover, during the mating operation, be sure to proceed without forcibly applying a load to the connector.
Allow the connector to be placed straight when the mating operation is completed.
X Direction (Longitudinal Direction) ⇒ for 20, 40, 60pos. : within 2°
for 80, 100, 120pos. : within 10°
Y Direction (Transverse Direction) ⇒ within 0.5°

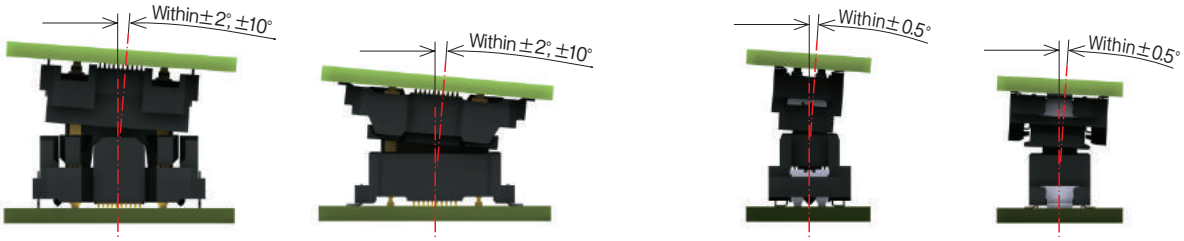

X Direction (Longitudinal Direction) Y Direction (Transverse Direction)

Note : This is not a recommended operation. Damage to the connector could occur.

● Permissible Misalignment in the Mated State (Floating Amount)

This connector is designed to float when mated. The permissible misalignment between PCBs in the mated state is ±0.6mm in both the X and Y directions.
However, this connector is not suitable for misalignment absorption when the misalignment amount is constantly changing due to vibration, etc. Be sure to secure PCBs after mating. Additionally, the number of repetitive floating operations shall be according to the number of connector insertion/withdrawal cycles.(100 times Max.)

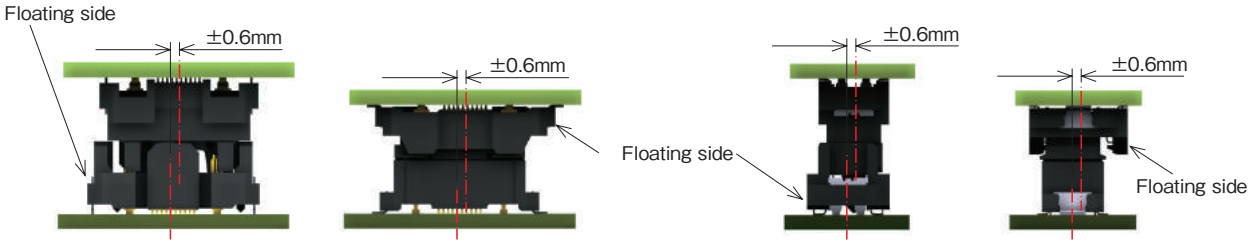

X Direction (Longitudinal Direction) Y Direction (Transverse Direction)

While Taking into Consideration

Specifications mentioned in this catalog are reference values.
When considering to order or use this product, please review the Drawing and Product Specifications sheets.
Use an appropriate cable when using the connector in combination with cables.
If considering usage of a non-specified cable, please contact your sales representative.
If assembly process is done by jigs & tools which are not identified by Hirose, the warranty of the product may be affected.
If considering usage for below mentioned applications, please contact your sales representative.
In cases where the application will demand a high level of reliability, such as automotive, medical instruments, public infrastructure, aerospace/defense etc. Hirose must review before assurance of reliability can be given.

HIROSE

HIROSE ELECTRIC CO.,LTD. 2-6-3,Nakagawa Chuoh,Tsuzuki-Ku,Yokohama-Shi 224-8540,JAPAN
https://www.hirose.com

※The contents of this catalog are current as of date of 2/2024. Contents are subject to change without notice for the purpose of improvements.
※The HRS logo and "HIROSE" are trademarks of HIROSE ELECTRIC CO., LTD.

May.1.2026 Copyright 2026 HIROSE ELECTRIC CO., LTD. All Rights Reserved.

Downloaded from Arrow.com.