© – TE Connectivity. All Rights Reserved.

REVISIONS					
P	LTR	DESCRIPTION	DATE	DWN	APVD
	A2	REVISED PER ECR-21-119230	02NOV2021	SS	VS

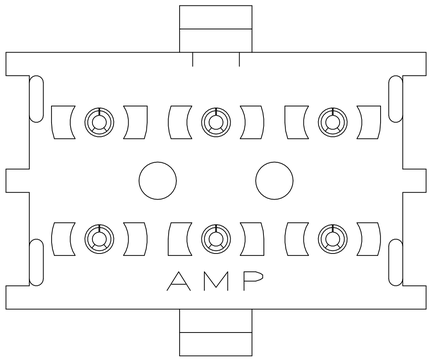

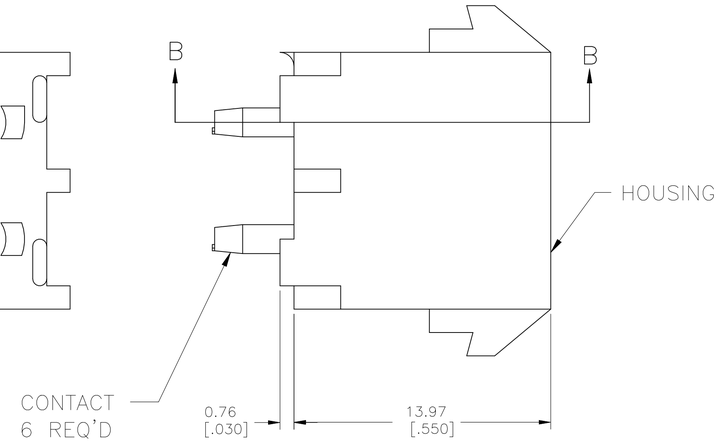

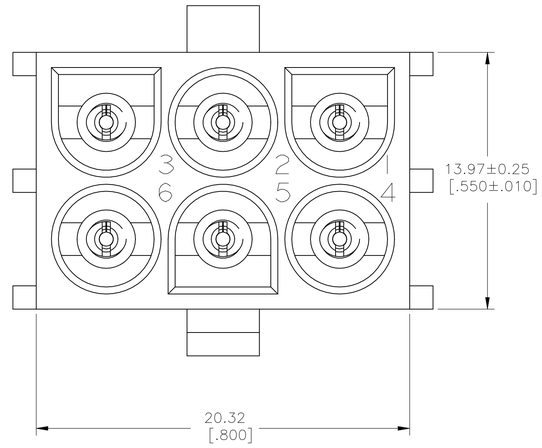

1 PARTS MATE WITH HOUSING 1586846

2 PARTS COMPLY TO AMP SOLDERABILITY SPECIFICATION 109-11-3.

3 CIRCUIT IDENTIFICATION CHARACTERS ARE ADJACENT TO THE INDICATED CAVITIES, BUT LOCATION AND ORIENTATION MAY DIFFER FROM PRINT.

4 FLAMMABILITY UL V-0 FOR THICKNESS 0.4, 0.45, 0.8, 1.6, AND 3.0 PER IEC 60695-11-10.

5 GLOW WIRE FLAMMABILITY (GWFI): 960°C FOR THICKNESS 0.45, 0.8, 1.6, AND 3.0 PER IEC 60695-2-12.

6 GLOW WIRE IGNITION (GWIT): 825°C FOR THICKNESS 0.45, 800°C FOR THICKNESS 0.8, 775°C FOR THICKNESS 1.6 AND 3.0 PER IEC 60695-2-13.

7 DIMENSIONS SHOWN REPRESENT PRODUCT IN DRY CONDITION. ADDITIONAL 2% GROWTH DUE TO END USE LOCATION MOISTURE ABSORPTION MAY OCCUR AND SHOULDE BE ACCOUNTED FOR.

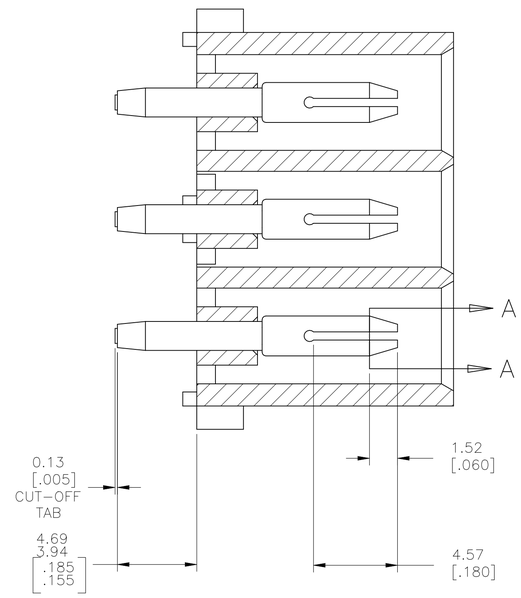

SECTION B-B

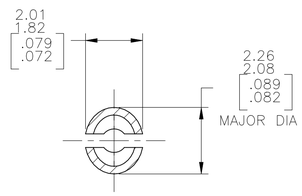

SECTION A-A
SCALE 10:1

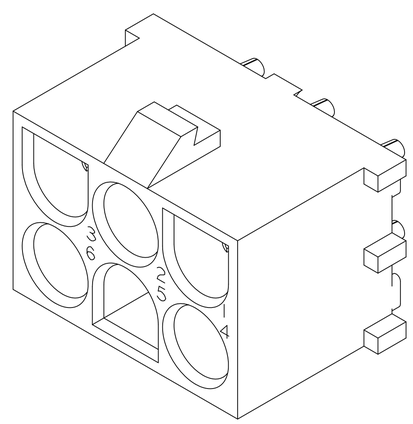

3 DIMENSIONAL MODEL
SCALE 4:1

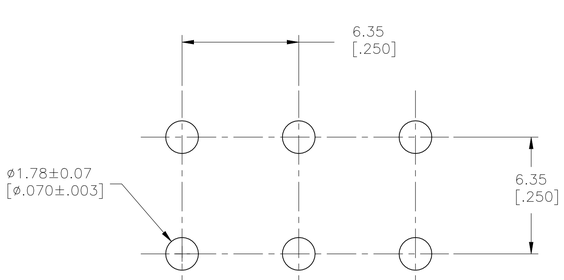

RECOMMENDED MOUNTING HOLE PATTERN
FOR 1.57[.062] THICK P.C. BOARD

PHOSPOR BRONZE, PRE-TIN	NYLON, UL V-0 GW, NATURAL	1969814-1
PIN CONTACT MATERAIL AND FINISH	HOUSING MATERIAL AND COLOR	PART NUMBER

THIS DRAWING IS A CONTROLLED DOCUMENT.

DIMENSIONS: mm [INCHES]

TOLERANCES UNLESS OTHERWISE SPECIFIED:
0 PLC ± –
1 PLC ± –
2 PLC ± 0.13[.005]
3 PLC ± –
4 PLC ± –
ANGLES ± 0° 30'

MATERIAL: SEE TABLE
FINISH: SEE TABLE

DWN 28DEC2015 BASVESH WARAD
CHK 28DEC2015 WICKES, EVAN
APVD 28DEC2015 WICKES, EVAN
PRODUCT SPEC —
APPLICATION SPEC —
WEIGHT 0.000000

TE Connectivity

NAME: PIN HEADER ASSEMBLY, 6 CIRCUIT, UNIVERSAL MATE-N-LOK
—

SIZE	CAGE CODE	DRAWING NO	RESTRICTED TO
A1	00779	C-1969814	—

CUSTOMER DRAWING | SCALE 5:1 | SHEET 1 OF 1 | REV A2

4805 (1/15)

Downloaded from Arrow.com.