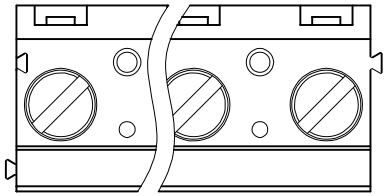

P.C.B LAYOUT

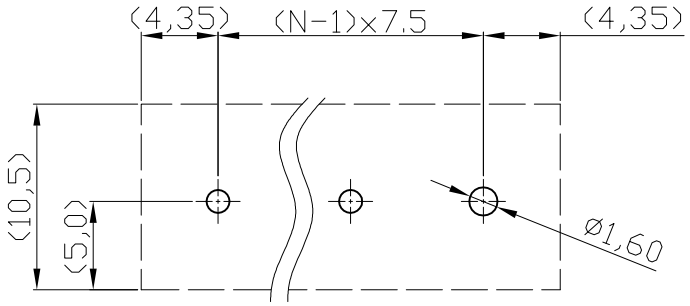

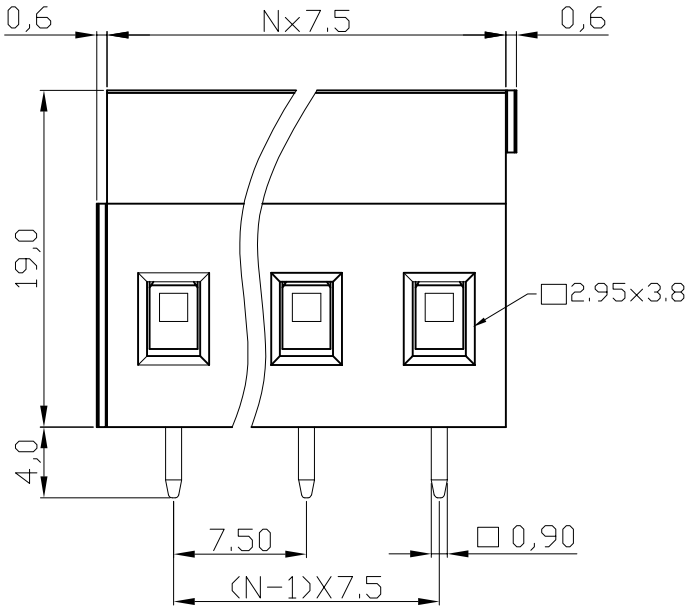

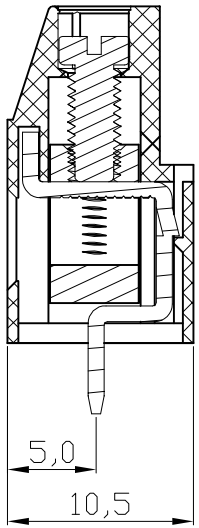

Material
1.Terminal body
(metal housing): Brass(CuZn)
2.Terminal screw:Steel Zinc plating"-"slot type
3.Contacts: Brass
4.Surface of solder tail:Tin plated
5.Insulator (housing): Thermoplastic (UL94V-0)
Electrical
1.Voltage rating: 300VAC
2.Current rating: 20A
3.Solid wire(AWG): 12-30
4.Stranded wire(AWG): 12-30
5.Torque: 3.5 Lb-In
6.Screw:M3
7.Wire strip length:6-7mm
8.Withstanding Voltage: 1.6KV
9.Operating temperature: -30°C to +105°C
10.Soldering temperature: 250°C±10°C/5 Sec
11.Safety Approval: c us

N= NUMBER OF CONCATS

RoHS compliant

② File No.: E349947

Scale	1:1
TOLERANCE	
X.	±0.50
X.X	±0.30
X.XX	±0.10
DIM	TOL
X.°	±1°
X.X°	±X°
Angle	TOL

Id.	Modification	Date	Name
②	Add the UL File No.	19.04.2016	Winnie
①	Drawn	27.05.2009	Dean

	Date	Name
Drawn	27.05.2009	Dean
Approved	19.04.2016	Winnie

ASSMANN WSW components

Customer-No.

ASSMANN WSW-No.
A-TB750-VJxxH

Drawing-No.
ASS 3523 CO

rev02

Replace

Sheet

SV1501

Downloaded from Arrow.com.