THIS DRAWING IS UNPUBLISHED. RELEASED FOR PUBLICATION -,- .
© COPYRIGHT - BY TYCO ELECTRONICS CORPORATION. ALL RIGHTS RESERVED.

LOC	DIST
AD	00

REVISIONS

P	LTR	DESCRIPTION	DATE	DWN	APVD
	A	REV PER EC 0S12-0302-05	15DEC05	BC	GS
	B	ECR-10-018652	10SEP10	SW	MQW
	C	ECO-11-024491	13DEC11	SY	MQW

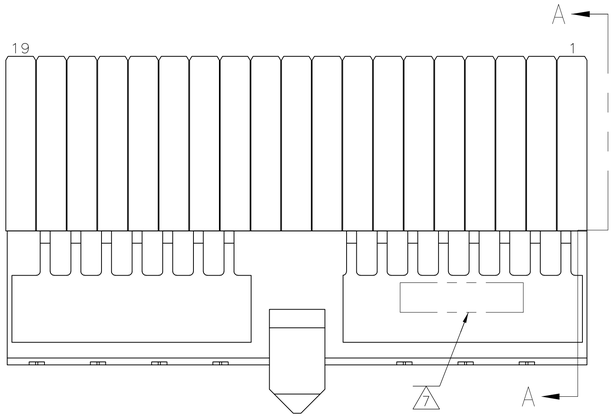

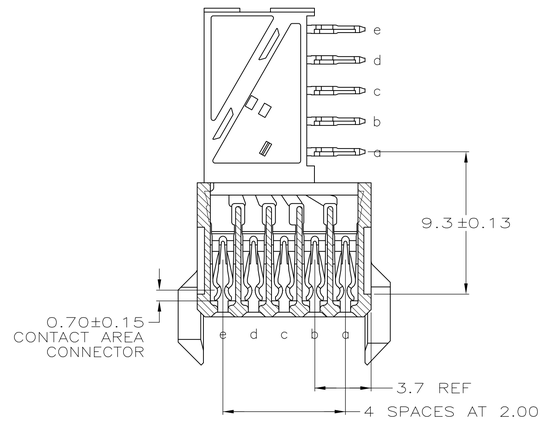

SECTION A–A

1. MATERIAL:
   CONTACT: PHOSPHOR BRONZE.
   HOUSING: GLASS–FILLED POLYESTER.
2. GENERAL PLATING SPECIFICATION: UNDERPLATING
   (ENTIRE CONTACT): 1.27µm MIN NICKEL AND ACTION
   PIN: 0.5µm MIN TIN.
   FOR PLATING OF MATING SURFACES SEE APPLICABLE
   SPECIFICATION REFERENCE FOR EACH DASH NUMBER.
3. CONFORMS TO ALL TESTING ACCORDING TO IEC 61076–4–101
   PERFORMANCE LEVEL 2.
4. CONFORMS TO ALL TESTING ACCORDING TO IEC 61076–4–101
   PERFORMANCE LEVEL 1.
5. CONNECTOR TESTED AND QUALIFIED AGAINST TELCORDIA GR–1217–CORE QUALITY LEVEL 3,
   CENTRAL OFFICE APPLICATIONS.
6. CONNECTOR TESTED AND QUALIFIED AGAINST TELCORDIA GR–1217–CORE QUALITY LEVEL 3,
   UNCONTROLLED ENVIROMENT APPLICATIONS.
7. CONNECTOR MARKED WITH PART NUMBER AND DATE CODE.
   ADDITIONAL CHARACTERS OR MARKINGS, AS WELL AS THE LOCATION OF THE MARKINGS,
   MAY BE ADDED FOR TRACEABILITY BASED UPON MANUFACTURERS DISCRETION.
8. PLATED–THROUGH HOLES AT 2x2mm SQUARE GRID.
9. CONNECTOR LUBRICATED WITH BELCORE APPROVED LUBRICANT,
   TECHNICAL REFERENCE: TR–NWT–001217 ISSUE 1, SEP 1992.

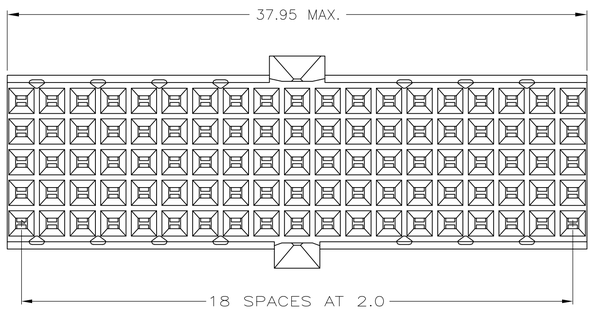

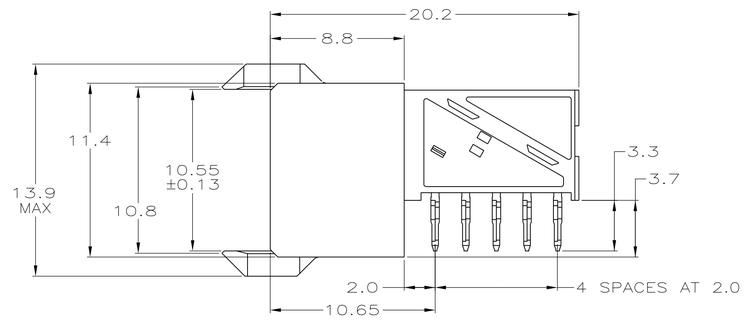

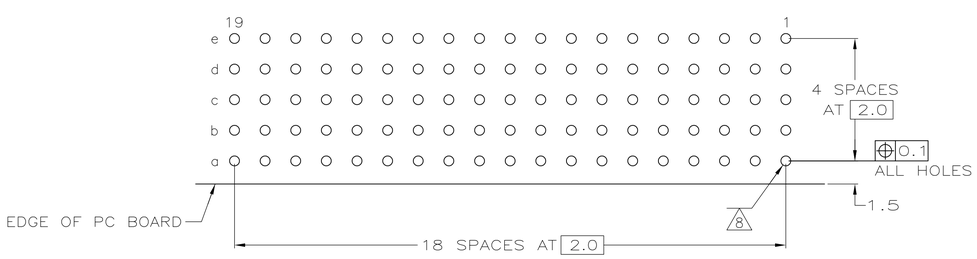

COMPONENT SIDE AS SHOWN
RECOMMENDED PCB HOLE LAYOUT

PLATED THRU HOLES PARAMETERS
REFERENCE APPLICATION SPECIFICATION

2 6 9	1–5646572–9
2 5 9	5646572–9
2 4	5646572–4
2 3	5646572–1
FINISH	PART NUMBER

THIS DRAWING IS A CONTROLLED DOCUMENT.

DIMENSIONS: mm

TOLERANCES UNLESS OTHERWISE SPECIFIED:
0 PLC ± —
1 PLC ± 0.1
2 PLC ± —
3 PLC ± —
4 PLC ± —
ANGLES ± —
±0.2

MATERIAL: 1

FINISH: SEE TABLE

DWN B.CARBO 04AUG05
CHK G.SKIPPER 04AUG05
APVD G.SKIPPER 04AUG05
PRODUCT SPEC 108–19082
APPLICATION SPEC 114–19029
WEIGHT —

Tyco Electronics
Tyco Electronics Corporation
Harrisburg, PA 17105–3608

NAME: RECEPTACLE ASSEMBLY, Z–PACK 2mm HM, TYPE A/B

SIZE	CAGE CODE	DRAWING NO	RESTRICTED TO
A1	00779	C–5646572	—

CUSTOMER DRAWING | SCALE 5:1 | SHEET 1 OF 1 | REV C

AMP 4805 REV 31MAR2000

Downloaded from Arrow.com.