YAMAICHI ELECTRONICS

ENGINEERED TO CONNECT

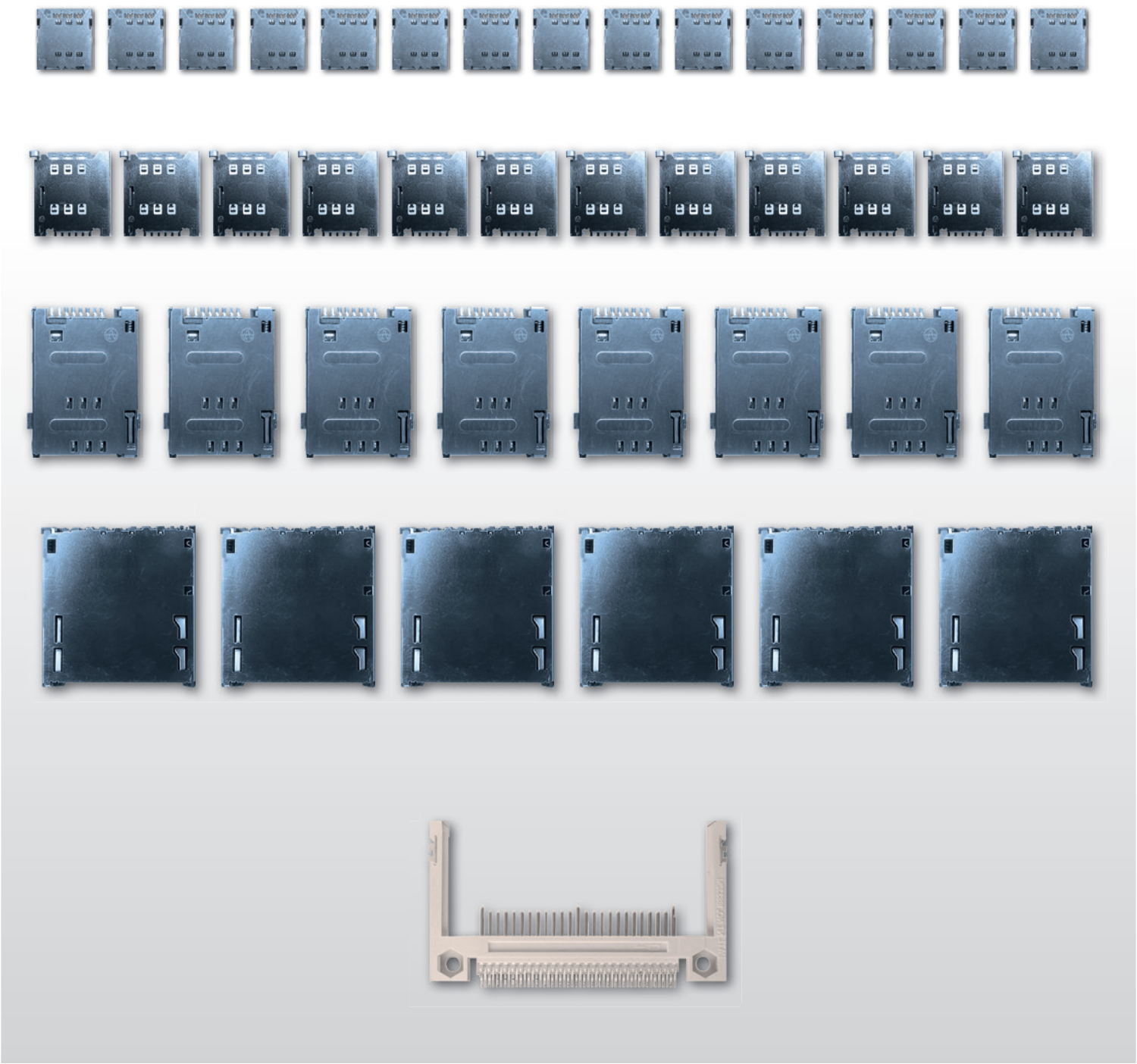

CARD CONNECTORS

Downloaded from Arrow.com.

The technical data and specifications of the products shown in this catalogue are for reference only, and apply to products available at the time of catalogue printing in November 2018. Product modification often involves changes to technical data and size, and it is therefore recommended that the buyer request the latest technical data and specifications before placing a purchasing contract.

Future updates to this printed catalogue can be found at
https://www.yamaichi.de/downloads/product-catalogues.html

Technische Daten und Maßangaben der im Katalog aufgeführten Produkte beziehen sich auf Referenzprodukte aus dem Produktsortiment bei Erscheinen des Katalogs im November 2018. Produktänderungen, insbsondere aufgrund technischer Weiterentwicklung, bedingen regelmäßig veränderte technische Daten und Maße. Dem Besteller wird daher dringend empfohlen, vor Vertragsabschluss technische Daten und Maßangaben gesondert nachzufragen.

Zukünftige Updates dieses gedruckten Katalogs finden Sie auf
https://www.yamaichi.de/de/downloads/produktkataloge.html

Downloaded from Arrow.com.

CARDS CONNECTORS

COMPATIBLE FLASH MEMORY CARDS
SERIES FPS, PJS, FMS, FUS, CF 5

SD AND MMC
SERIES FPS ..... 6 - 25

MICROSD
SERIES PJS ..... 26 - 32

SIM
SERIES FMS ..... 33 - 40

MICROSIM AND NANOSIM
SERIES FUS ..... 41 - 42

COMPACT FLASH
SERIES CF ..... 43 - 51

EUROPEAN DISTRIBUTORS 52

PART NUMBER INDEX 53

YAMAICHI ELECTRONICS FACTS & FIGURES

Foundation:	Headquarters, Tokyo: 1956
	European Headquarter, Aschheim near Munich: 1986
Turnover:	Worldwide 230 m € p.a., Europe 75 m € p.a.
Employees:	Over 2,100, in Europe 285
Certification:	DIN EN ISO 9001:2015 (HQ and production EU)
	ISO 14001:2015 (production in Frankfurt/Oder)
	ISO/TS 16949 (selected production sites)
Locations:	Worldwide 7 production sites, 6 design centers,
	13 sales locations

as of May 2018

YAMAICHI ELECTRONICS ZAHLEN & FAKTEN

Firmengründung:	Konzernsitz, Tokyo: 1956
	Europäische Zentrale, Aschheim bei München:1986
Umsatz:	weltweit 230 Mio € p.a., Europa 75 Mio € p.a.
Mitarbeiter:	über 2.100 weltweit, 285 in Europa
Zertifizierung:	DIN EN ISO 9001:2015 (HQ und Produktion EU)
	ISO 14001:2015 (Produktion in Frankfurt/Oder)
	ISO/TS 16949 (ausgewählte Produktionsstandorte)
Standorte:	weltweit 7 Produktionsstandorte, 6 Design-Zentren,
	13 Vertriebszentren

Mai 2018

PRODUCT RANGE

Yamaichi Electronics designs, manufactures and markets high performance interconnection devices, also for use in the most demanding applications of electronic systems: with high temperature environments, protected interconnections for harsh environments and high-speed interconnections for data networking applications. The portfolio covers high precision fine pitch IC sockets, connectors, cable assemblies and flexible printed circuit boards.

YAMAICHI EUROPE

Yamaichi Electronics Deutschland GmbH, located in Aschheim near Munich, is your European partner for connectivity solutions covering Industrial, Automotive, Measurement & Testing, Data Networking, Medical and Embedded & Semiconductor applications.

Two Divisions:

Connector Solutions: Portfolio: Connectors for Industrial use, for example circular connectors Y-Circ M (M12) and Y-Circ P (Push-Pull), Y-Con Series (RJ45 and USB). Automotive connectors FAKRA/HSD, Quadlock (Y-QUAD) and others, card connectors, high speed connector systems and latest input /output connectors. Internal connectors for high end applications (Y-Lock series). Data networking connectors, cables and cable assemblies as well as production sockets.

Test Solutions: Portfolio: IC semiconductor test & burn-in sockets, modular test contactors, test adapter systems for computer-on-modules, receptacles, spring probe pins, PCB design.

In all product areas we offer customer specific solutions.

ENGINEERING

Two design centers in Munich (Germany) and Sousse (Tunisia) react quickly to market challenges and work with the most modern technologies for the realisation of customer needs from product ideas to qualified mass production. Two fully equipped inhouse test laboratories allow internal product qualification and guarantee convincing product quality.

PRODUCTION FOR THE EUROPEAN MARKET

In our production facility in Frankfurt (Oder) we have been manufacturing connectors and complex cable assemblies for e.g. industrial or medical applications since 2006. In the area of test solutions we produce high end test contactors, module test adapters and receptacles. We offer special know-how in overmolding, welding, resistance welding and machining technologies. To ensure highest quality and short delivery times we have a high grade of vertical range of manufacturing and established a reliable European supplier network.

LEISTUNGSSPEKTRUM

Yamaichi Electronics entwickelt, produziert und vermarktet hochleistungsfähige elektromechanische Komponenten, auch für anspruchsvollste Anwendungen in elektronischen Systemen: für den Hochtemperaturbereich, geschützt für den Einsatz unter rauhen Umgebungsbedingungen und High Speed Verbindungstechnik für Datanetworking Anwendungen. Das Portfolio umfasst hochpräzise Fine pitch IC Sockel, Steckverbinder, Kabelassemblierungen und flexible Leiterplatten.

YAMAICHI EUROPA

Yamaichi Electronics Deutschland Gmbh, mit Sitz in Aschheim bei München, ist Ihr europäischer Ansprechpartner für Verbindungstechnik. Lösungen für Applikationen in: Automatisierung, Automotive, Mess- und Prüftechnik, Data Networking, Medizintechnik und Halbleiterindustrie.

Zwei Bereiche:

Connector Solutions: Portfolio: Industriesteckverbinder, z.B. Rundsteckverbinder Y-Circ M (M12) und Y-Circ P (Push-Pull), Y-Con (RJ45 and USB). Automotive Steckverbinder FAKRA/HSD, Quadlock (Y-QUAD) und andere spezielle Automotive Lösungen, Kartensteckverbinder, High Speed Steckverbindersysteme und neueste Input/Output Steckverbinder. Interne Steckverbinder für High End Applikationen (Y-Lock Serie). Data Networking Steckverbinder, Kabel und Kabelassemblierungen, Produktionssockel.

Test Solutions: Portfolio: IC Halbleiter Test & Burn-In Sockel, modulare Test Contactoren, Test Adapter Systeme für Computer-on-Modules, Receptacles, Federkontaktstifte, PCB Design.

In allen Produktbereichen bieten wir kundenspezifische Lösungen an.

ENGINEERING

Mit zwei Design-Zentren in München und Sousse (Tunesien) ist die schnelle Reaktion auf Marktanforderungen und Kundenwünsche sichergestellt. Unser Entwicklungsteam arbeitet mit den modernsten Technologien zur Realisierung von Kundenanforderungen. Umfangreich ausgestattete hauseigene Testlabore ermöglichen die interne Qualifizierung von Produkten und gewährleisten überzeugende Produktqualität.

PRODUKTION FÜR DEN EUROPÄISCHEN MARKT

An unserem Fertigungstandort in Frankfurt (Oder) werden seit 2006 Steckverbinder und komplexe Kabelassemblierungen z.B. für Industrie- oder Medizinanwendungen hergestellt. Im Bereich Test Solutions werden High End Test Contactors, Modultestadapter und Receptacles gefertigt. Wir bieten Spezial-Know-How in den Fertigungstechnologien Spritzguss, Schweißen, Widerstandsschweißen und Zerspanungstechnik. Die hohe Fertigungstiefe sowie in Europa ansässige zuverlässige Zulieferfirmen garantieren hochwertige Produkte und kurze Lieferzeiten.

Downloaded from Arrow.com.

FEATURES	SECURE DIGITAL & MMC	SIM	MICROSIM	NANOSIM
Yamaichi Series	FPS009	FMS	FUS	FUS
Series Page Number	26 - 33	26 - 33	44 -45	44 - 45
Read/Write [MB/s]	2.5 / 2.5	-	-	-
Write Protect	no	-	-	-
Voltage	2.7 ~ 3.6	-	-	-
Op. Temp. Range	-25 ~ +85°C	-25~ +85°C	-25 ~ +85°C	-25~ +85°C
# of Pads	9 (SD) 7 (MMC)	8	8	8
Weight (g)	1.5	-	-	-
Volume (mm³)	1,075	(281)	(281)	(281)
Dimensions	24 x 32 x 2.1	15 x 25 x 0.76	12 x 15 x 0.76	1?? x 25 x 0.76
Association	www.sdcard.org/www.mmca.org	www.etsi.org	www.etsi.org	www.etsi.org

FEATURES	MICROSD	CFAST (CF)	COMPACT FLASH (CF)
Yamaichi Series	PJS008	CF050	CF050
Series Page Number	26 - 33	47 - 55	47 - 55
Read/Write [MB/s]	12.5 / 12.5	up to 600	20 / 20
Write Protect	yes	no	no
Voltage	2.7 ~ 3.6	3.3 / 5.0	3.3 / 5.0
Op. Temp. Range	-25 ~ +85°C	-40 ~ +85°C	0 ~ +70°C
# of Pads	8	24	50
Weight (g)	0.4	~10	Typ.I: 11.4 / Typ.II: 13.5
Volume (mm³)	165	5141	Typ.I: 5,141 / Typ.II: 7,790
Dimensions	11 x 15 x 1.0	42.8 x 36.4 x 3.6	42.8 x 36.4 x 3.3/ (Typ.II 5.0)
Association	www.sdcard.org	www.compactflash.org	www.compactflash.org

as of Nov 2014

SPECIFICATIONS

Insulation Resistance:	1,000MΩ min. at 500V DC
Withstanding Voltage:	500V ACrms for 1 minute
Contact Resistance:	100mΩ at 1mA / 40mV max.
Voltage Rating:	5V DC
Current Rating:	0.5A
Operating Temp. Range:	-25°C to +85°C
Coplanarity:	≤ 0.1mm
Mating Cycles:	10,000 (office environment)

MATERIALS AND FINISH

Insulator:	LCP
Shielding Plate:	Stainless Steel,
Contacts:	Copper Alloy
Contact Area:	Ni-Au
Solder Tail:	Ni-Sn

PART NUMBER

FPS 009 - 290* - 0

- Series No.
- Number of Contacts
- Design No.* 1= sides Tin plating
  4= sides Ni plating with Au on solder terminal
  5= side Ni plating with Au on solder terminal
- 0 = Tape & Reel Packaging

FEATURES

- Connector for both card types (MMC and SD card)
- Smooth extraction function by Push-in/ Push-out of card
- Soft lock mechanism for SD card
- Super low profile (Ht. 2.80 x W. 28.10 x L. 27.10)
- Tape & Reel packaging (500 pcs / reel)
- Card detector
- Write protection switch
- Mechanism to avoid flying out of the card
- Closed cover
- RoHS2011/65/EU

OUTLINE DIMENSIONS

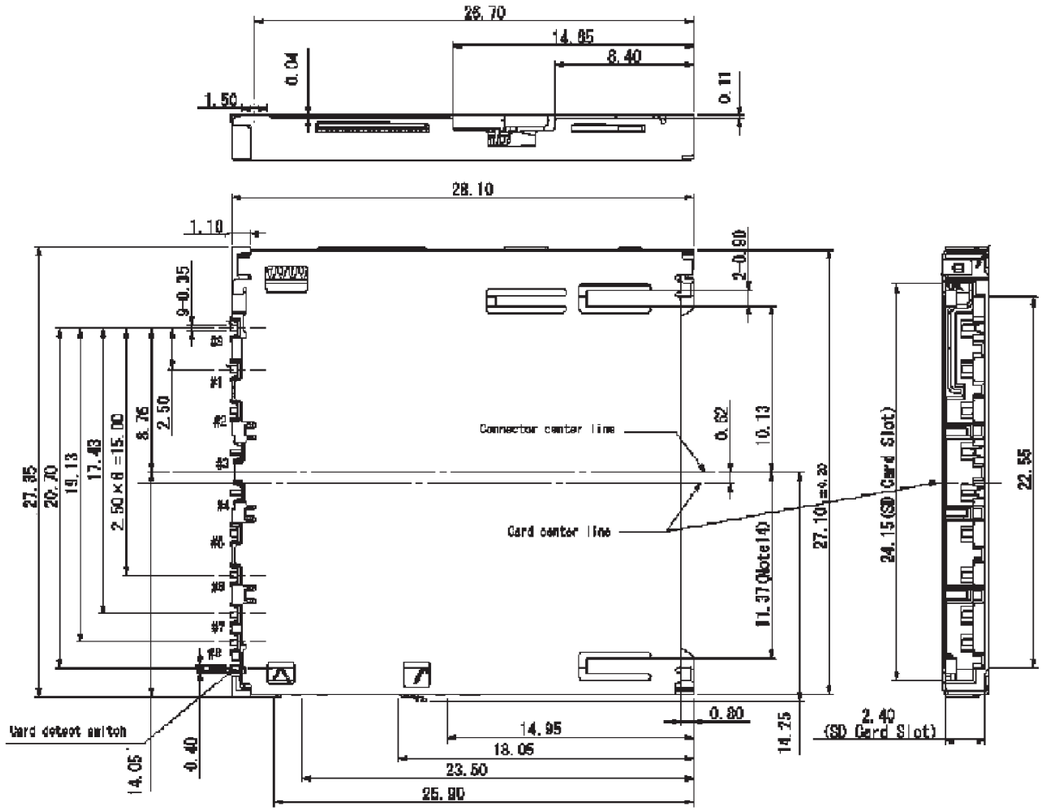

Downloaded from Arrow.com.

RECOMMENDED PCB LAYOUT FOR FPS009-2901-0

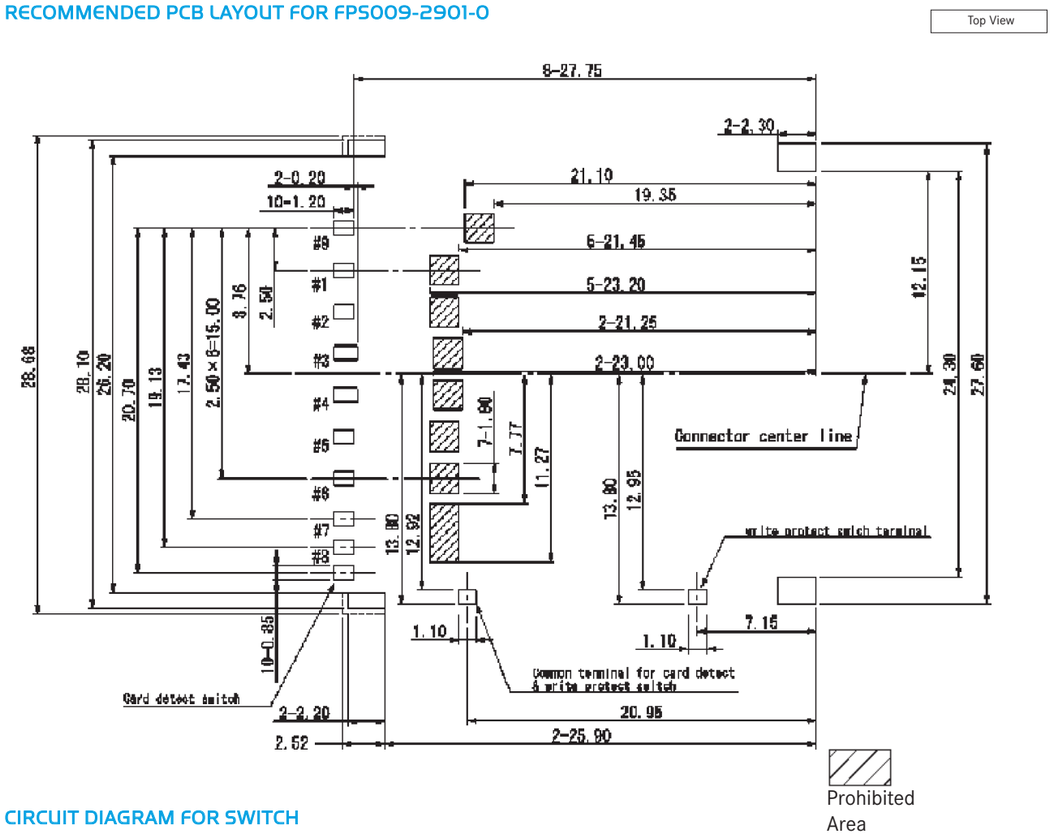

CIRCUIT DIAGRAM FOR SWITCH

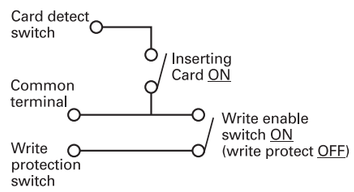

CARD INSERTION DETAILS

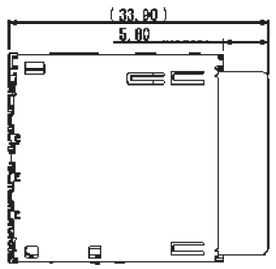

Card locked position

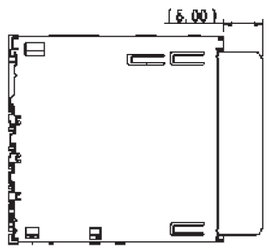

Card pushed position

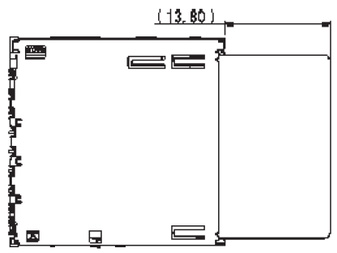

Card eject position

SPECIFICATIONS

Insulation Resistance:	1,000MΩ min. at 500V DC
Withstanding Voltage:	500V ACrms for 1 minute
Contact Resistance:	100mΩ at 1mA / 20mV max.
Voltage Rating:	5V DC
Current Rating:	0.5A
Operating Temp. Range:	-25°C to +85°C
Mating Cycles:	5,000 (harsh environment)
	10,000 (office environment)

PART NUMBER

FPS 009 - 2903 - 0 - VE

- Series No.
- Number of Contacts
- Design No.
- 0 = Tape & Reel Packaging

MATERIALS AND FINISH

Insulator:	LCP
Shielding plate:	Stainless
Contact:	Copper Alloy
	Contact area:Ni-Au
	Solder tail: Ni-Sn

AUTOMOTIVE COMPLIANT

FEATURES

- SD reader for harsh environment with automotive applications
- Connector for both card types (MMC and SD card)
- Smooth extraction function by Push-in/ Push-out of card
- Tape & Reel packaging (500 pcs / reel)
- EMI prevention with four grounding terminals
- Card detector
- Write protection switch
- RoHS2011/65/EU

OUTLINE DIMENSIONS

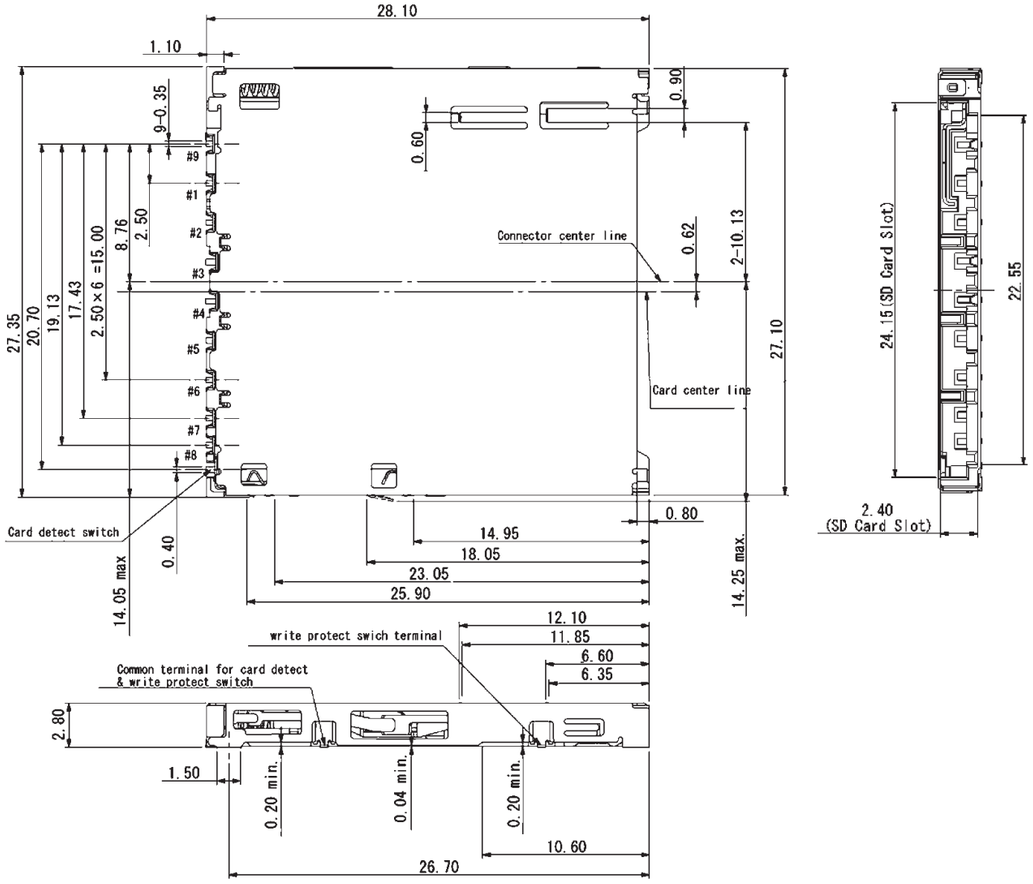

Downloaded from Arrow.com.

YAMAICHI ELECTRONICS
SERIES FPS
SD CARD AND MMC CONNECTOR - PUSH/PUSH FOR AUTOMOTIVE

RECOMMENDED PCB LAYOUT FOR FPS009-2903-0VE

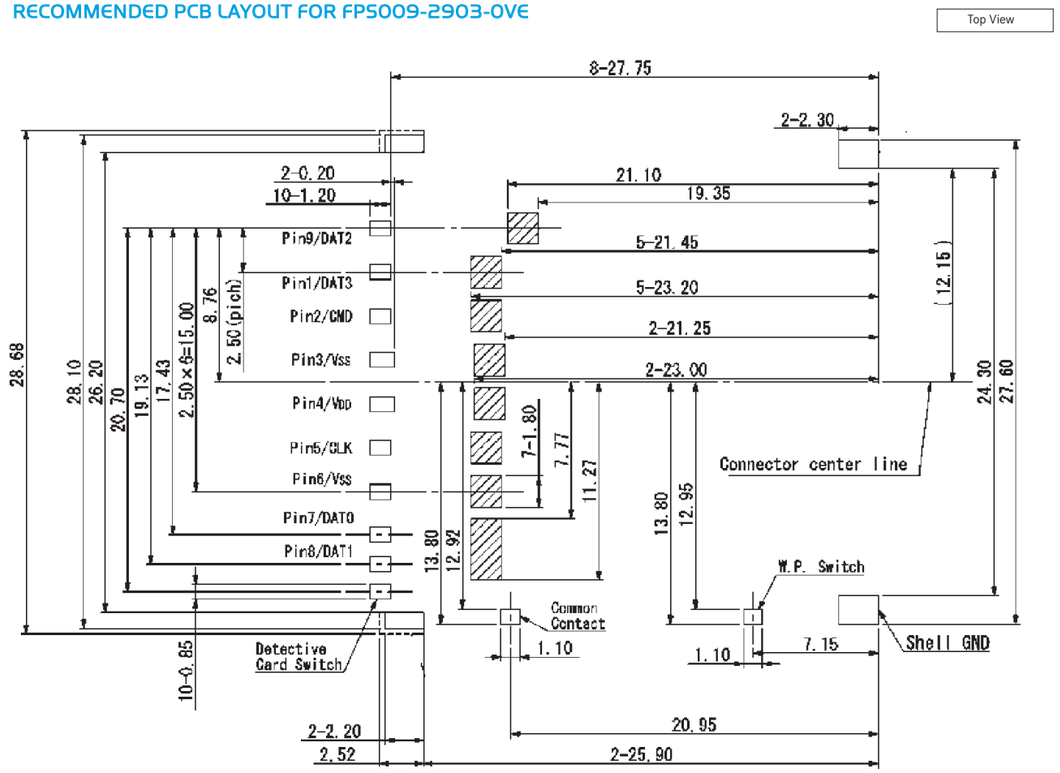

CIRCUIT DIAGRAM FOR SWITCH

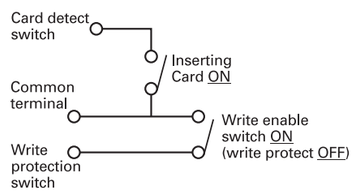

CARD INSERTION DETAILS

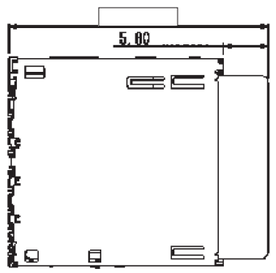

Card locked position

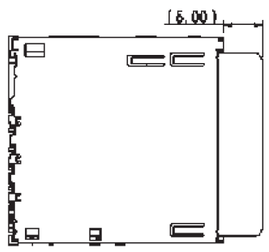

Card pushed position

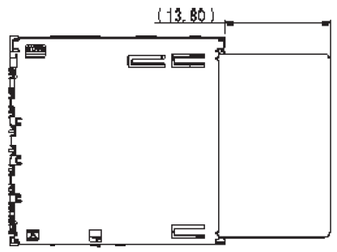

Card eject position

SPECIFICATIONS

Insulation Resistance:	1,000MΩ min. at 500V DC
Withstanding Voltage:	500V ACrms for 1 minute
Contact Resistance:	100mΩ at 1mA / 20mV max.
Voltage Rating:	250Vrms AC
Current Rating:	0.5A
Operating Temp. Range:	-25°C to +85°C
Coplanarity:	≤ 0.1mm
Mating Cycles:	10,000 (office environment)

PART NUMBER

FPS 009 - 2409 - 0

- Series No.
- Number of Contacts
- Design No.
- 0 = Tape & Reel Packaging

MATERIALS AND FINISH

Insulator:	LCP
Shielding Plate:	SUS
Contacts:	Copper Alloy
	Contact Area: Ni-Au
	Solder Tail: Ni-Sn

AUTOMOTIVE COMPLIANT

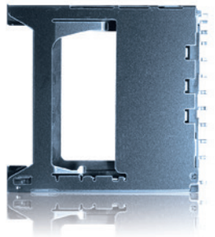

FEATURES

- Connector for both card types (MMC and SD card)
- Card detector
- Smooth extraction function by Push-in/ Push-out of card
- Soft lock mechanism for SD card
- Two-point contact, protection against electrical interruption
- Write protection switch
- Mechanism to avoid flying out of the card
- RoHS2011/65/EU
- Tape & Reel packaging (600 pcs / reel)

OUTLINE DIMENSIONS

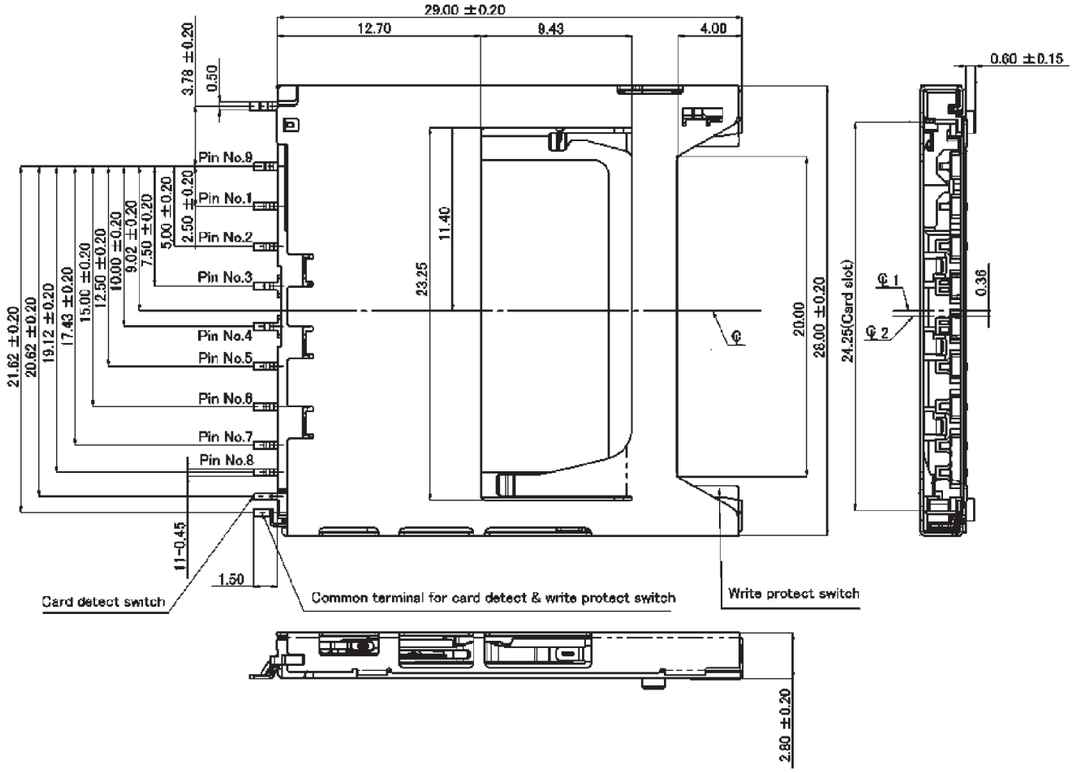

Downloaded from Arrow.com.

YAMAICHI ELECTRONICS
SERIES FPS
SD CARD AND MMC CONNECTOR - PUSH/PUSH (LOW PROFILE)

RECOMMENDED PCB LAYOUT FOR FPS009-2409-0

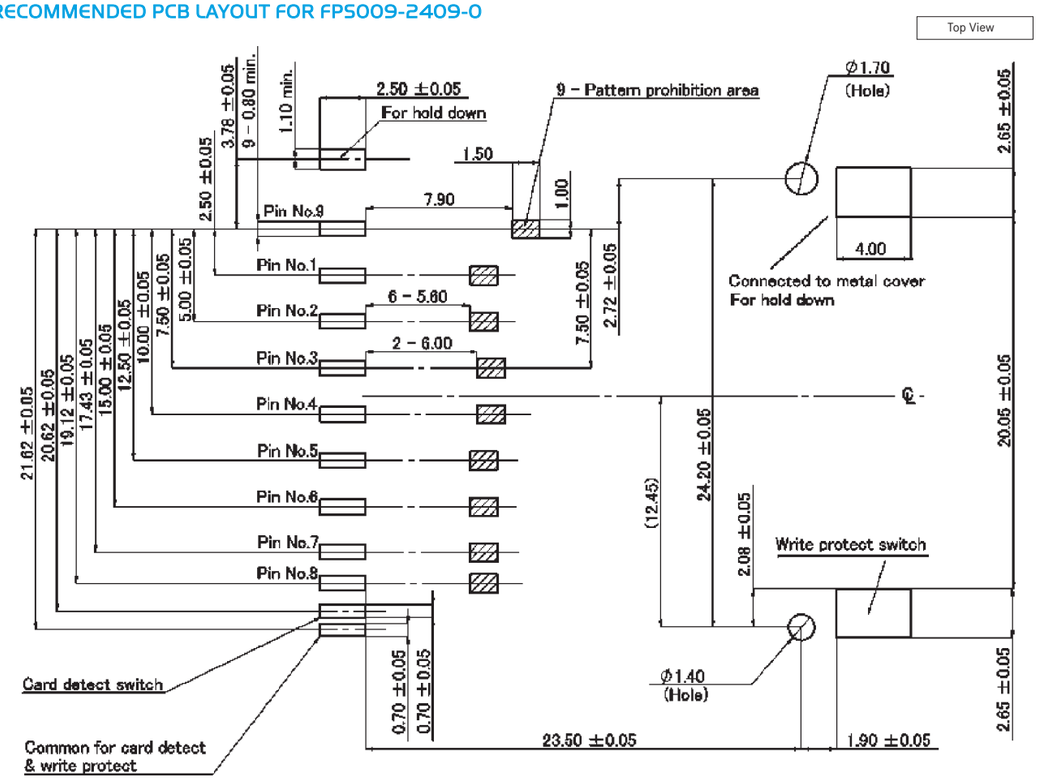

CIRCUIT DIAGRAM FOR SWITCH

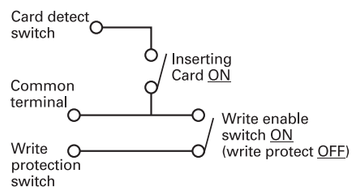

CARD INSERTION DETAILS

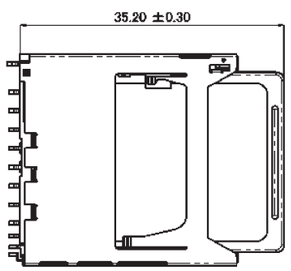

Card locked position

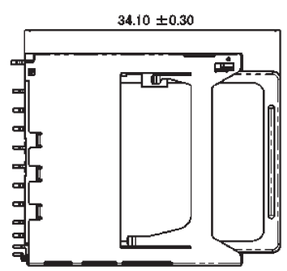

Card pushed position

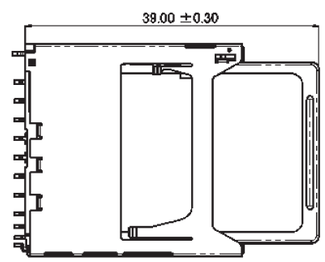

Card eject position

SPECIFICATIONS

Insulation Resistance:	1,000MΩ min. at 500V DC
Withstanding Voltage:	500V ACrms for 1 minute
Contact Resistance:	100mΩ at 1mA / 20mV max.
Voltage Rating:	250Vrms AC
Current Rating:	0.5A
Operating Temp. Range:	-25°C to +85°C
Mating Cycles:	10,000 (office environment)

MATERIALS AND FINISH

Insulator:	LCP
Shielding Plate:	SUS, t = 0.2
Contacts:	Copper Alloy: t =0.15
Contact Area:	Ni-Au
Solder Tail:	Ni-SnCu

PART NUMBER

FPS 009 - 2305 - 0

- Series No.
- Number of Contacts
- Design No.
- 0 = Tape & Reel Packaging

AUTOMOTIVE COMPLIANT

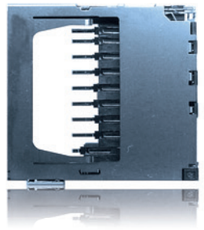

FEATURES

- Connector for both card types (MMC and SD card)
- Smooth extraction function by Push-in/ Push-out of card
- Soft lock mechanism for SD card
- Tape & Reel packaging (500 pcs per reel)
- RoHS2011/65/EU
- Mechanism to avoid flying out of the card
- Small size (Ht. 3.1 x W. 28.0 x L. 29.8)
- 2-point contact, protection against electrical interruption
- Card detector and Write protection switch

OUTLINE DIMENSIONS

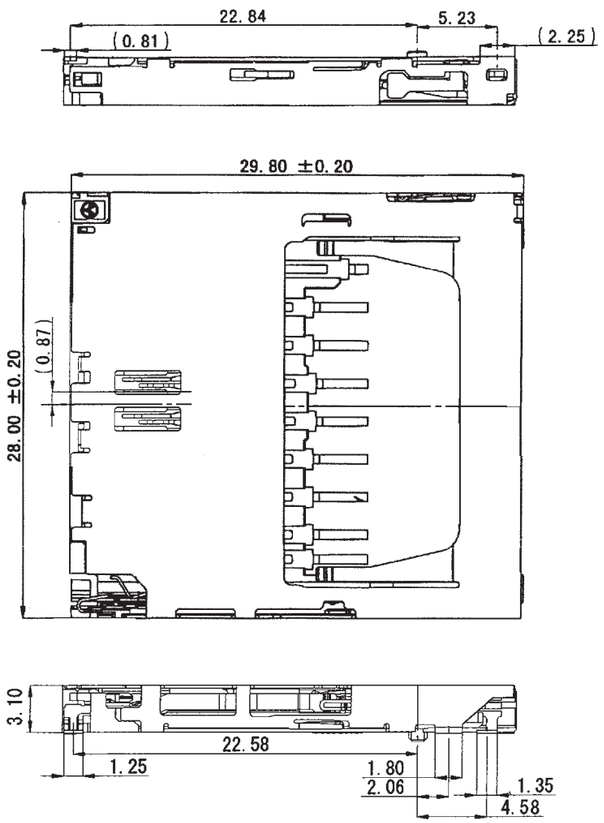

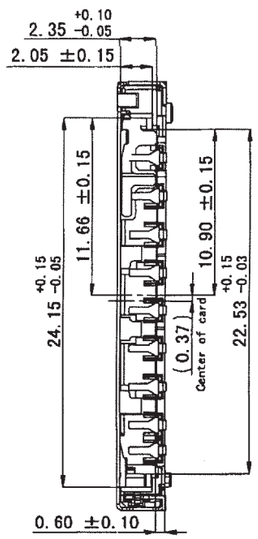

CIRCUIT DIAGRAM FOR SWITCH

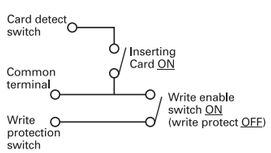

Downloaded from Arrow.com.

RECOMMENDED PCB LAYOUT FOR FPS009-2305-0

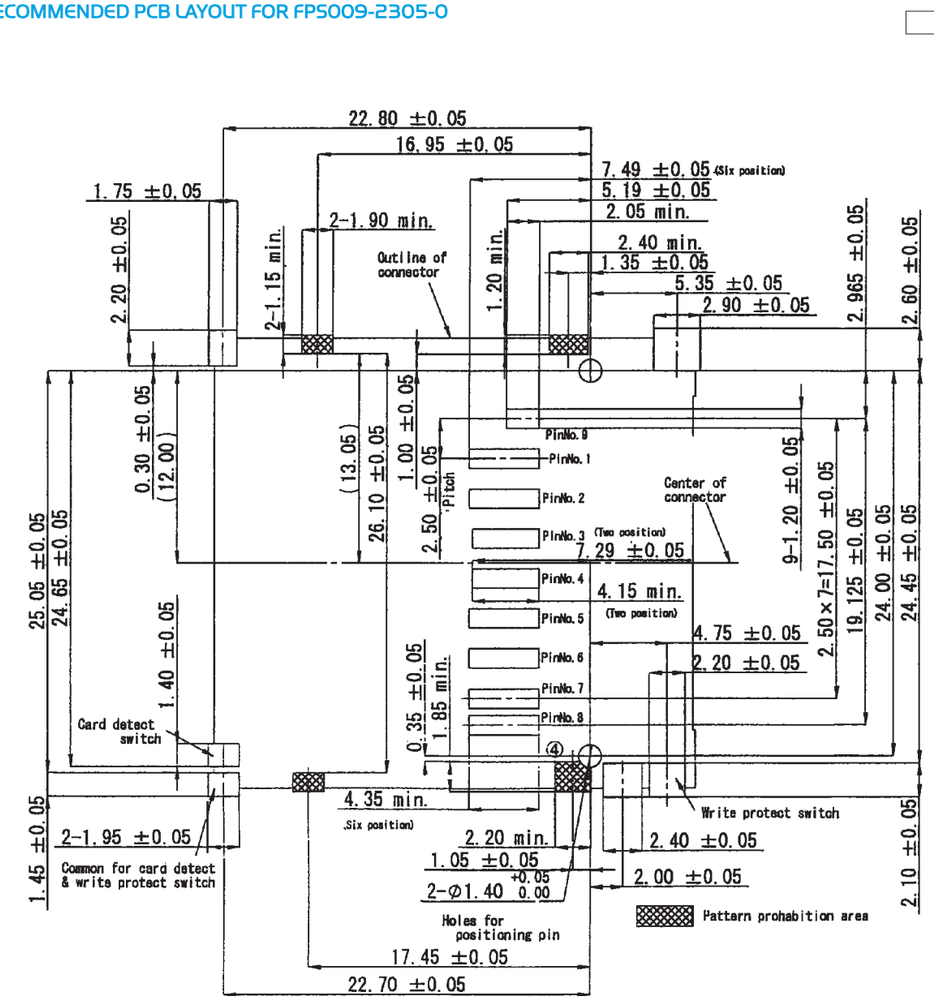

CARD INSERTION DETAILS

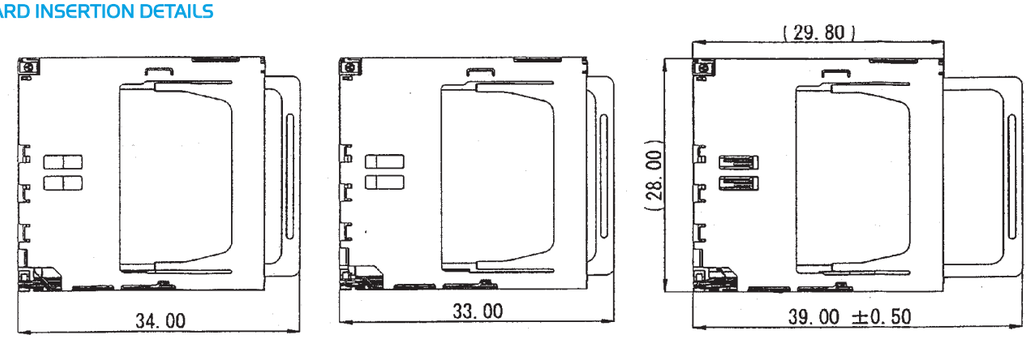

Card locked position | Card pushed position | Card eject position

SPECIFICATIONS

Insulation Resistance:	500MΩ min. at 500V DC
Withstanding Voltage:	500V ACrms for 1 minute
Contact Resistance:	100mΩ at 1mA / 20mV max.
Voltage Rating:	5Vrms AC
Current Rating:	0.5A
Operating Temp. Range:	-25°C to +85°C
Coplanarity:	≤ 0.1mm
Mating Cycles:	10,000 times (office environment)

MATERIALS AND FINISH

Insulator:	LCP
Shielding plate:	Stainless
Contact:	Copper Alloy
Contact Area:	Ni-Au
Solder Tail:	Ni-Sn

PART NUMBER

FPS 009 - 2960 - 0

- Series No.
- Number of Contacts
- Design No.
- 0 = Tape & Reel Packaging

FPS 009 - 2961 - 0

- Series No.
- Number of Contacts
- Design No. (additional solder tabs)
- 0 = Tape & Reel Packaging

FEATURES

- Connector for both card types (MMC and SD card)
- For assembly underneath the PC-board (reversed)
- Smooth extraction function by Push-in/ Push-out of card
- EMI prevention
- SDIO capable
- RoHS2011/65/EU
- Card detector
- Write protection switch
- Card mis-insertion prevention design
- Soft lock mechanism for SD card
- Card fly-out stop design
- Tape & Reel packaging (500 pcs / reel)

AUTOMOTIVE COMPLIANT

OUTLINE DIMENSIONS

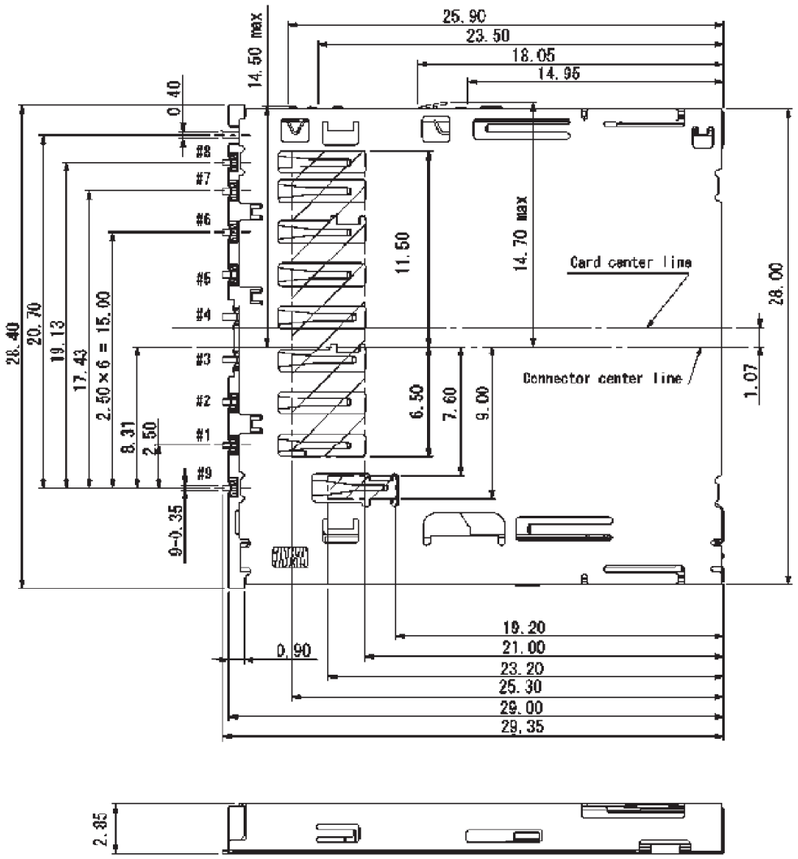

Downloaded from Arrow.com.

RECOMMENDED PCB LAYOUT FPS009-2960-0

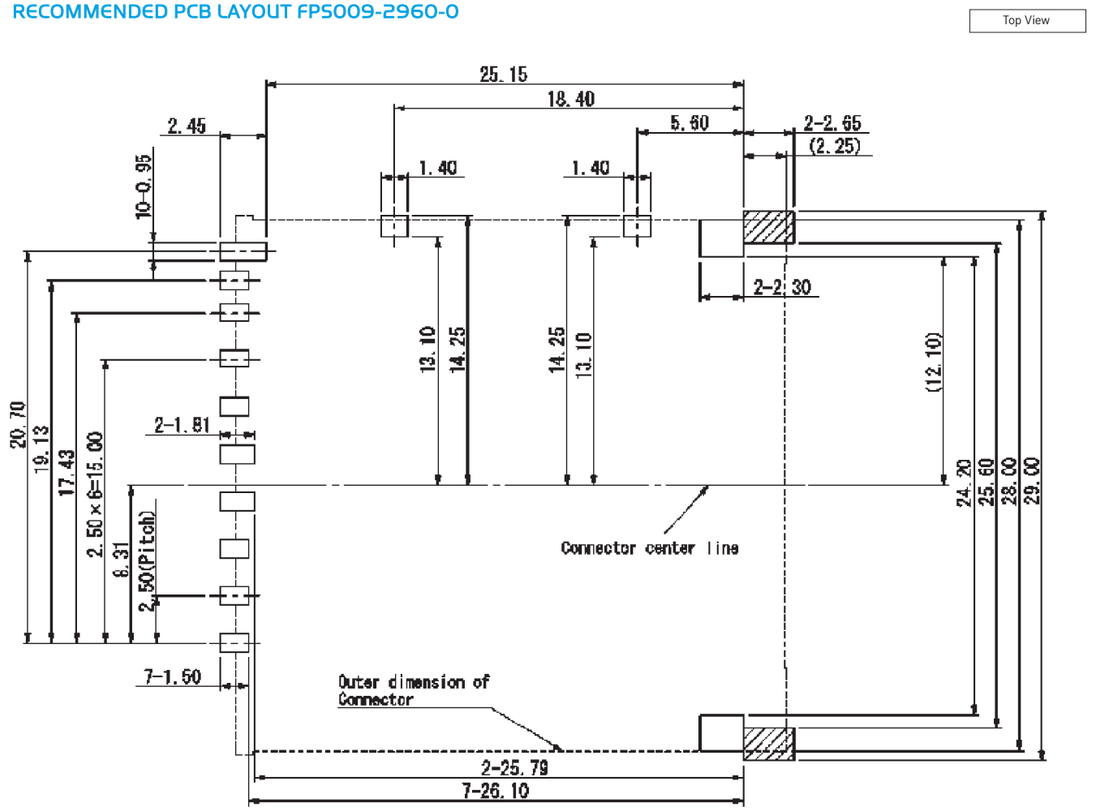

Prohibited Area

CIRCUIT DIAGRAM FOR SWITCH

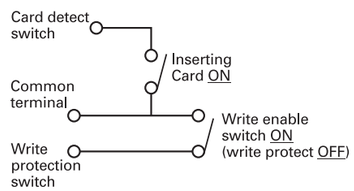

CARD INSERTION DETAILS

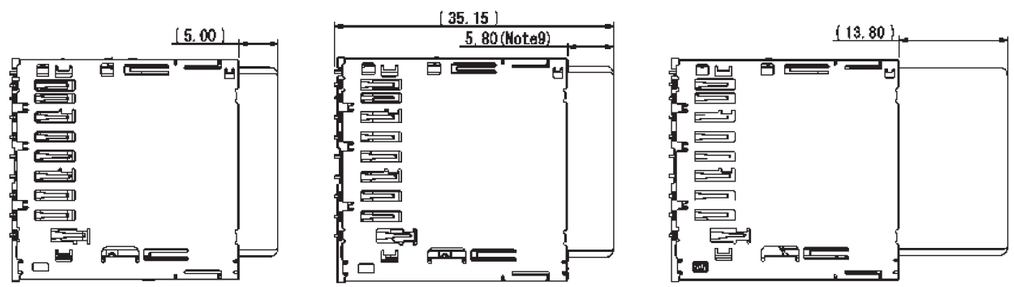

Card pushed position | Card locked position | Card eject position

SPECIFICATIONS

Insulation Resistance:	1,000MΩ min. at 500V DC
Withstanding Voltage:	500V ACrms for 1 minute
Contact Resistance:	100mΩ at 1mA / 40mV max.
Voltage Rating:	5V DC
Current Rating:	0.5A
Operating Temp. Range:	-25°C to +85°C
Mating Cycles:	10,000 (office environment)

PART NUMBER

FPS 009 - 2920 - 0

- Series No.
- Number of Contacts
- Design No.
- 0 = Tape & Reel Packaging

MATERIALS AND FINISH

Insulator:	LCP
Shielding plate:	Stainless
Contact:	Copper Alloy: t=0.15
Contact Area:	Ni-Au
Solder Tail:	Ni-Sn

AUTOMOTIVE COMPLIANT

FEATURES

- Card stay detection switch at the slot area
- EMI prevention with four grounding terminals
- Smooth extraction function by Push-in/ Push-out of card
- Write protection switch
- SDIO capable
- Tape & Reel packaging (500 pcs / reel)
- RoHS2011/65/EU

OUTLINE DIMENSIONS

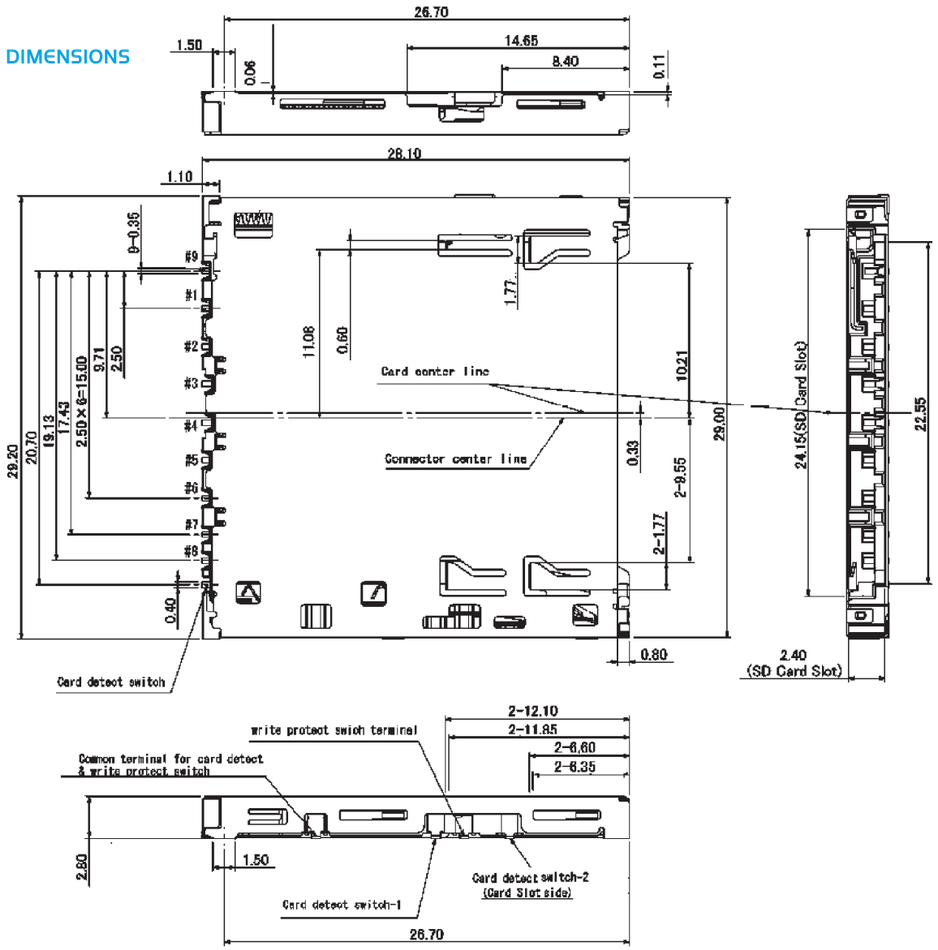

Downloaded from Arrow.com.

YAMAICHI ELECTRONICS
SERIES FPS
SD CARD AND MMC CONNECTOR - SPECIAL SWITCH POSITION (TOP MOUNT)

RECOMMENDED PCB LAYOUT FOR FPS009-2920-0

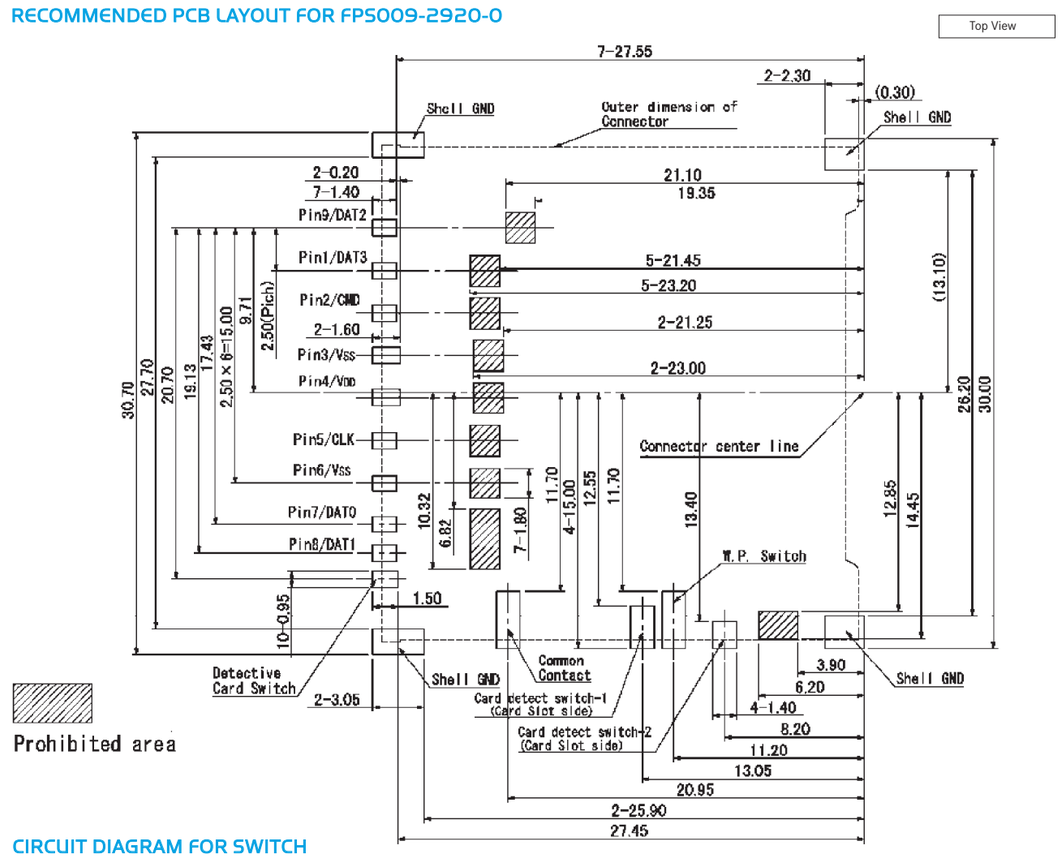

CIRCUIT DIAGRAM FOR SWITCH

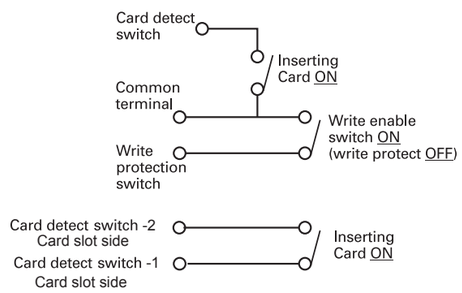

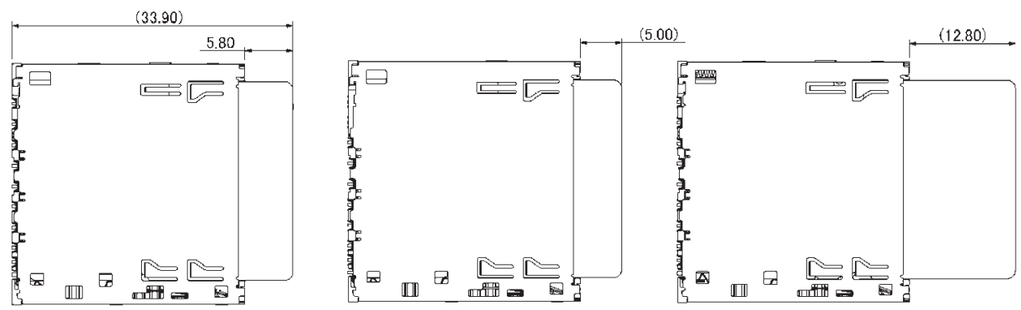

Card locked position | Card pushed position | Card eject position

SPECIFICATIONS

Insulation Resistance:	1,000MΩ min. at 500V DC
Withstanding Voltage:	500V ACrms for 1 minute
Contact Resistance:	100mΩ at 1mA / 40mV max.
Voltage Rating:	5V DC
Current Rating:	0.5A
Operating Temp. Range:	-25°C to +85°C
Mating Cycles:	10,000 (office environment)

PART NUMBER

FPS 009 - 2970 - 0

- Series No.
- Number of Contacts
- Design No.
- 0 = Tape & Reel Packaging

MATERIALS AND FINISH

Insulator:	LCP
Shielding plate:	Stainless
Contact:	Copper Alloy: t=0.15
Contact Area:	Ni-Au
Solder Tail:	Ni-Sn

AUTOMOTIVE COMPLIANT

FEATURES

- Card stay detection switch at the slot area
- EMI prevention with four grounding terminals
- Smooth extraction function by Push-in/ Push-out of card
- Write protection switch
- SDIO capable
- Tape & Reel packaging (400 pcs / reel)
- RoHS2011/65/EU

OUTLINE DIMENSIONS

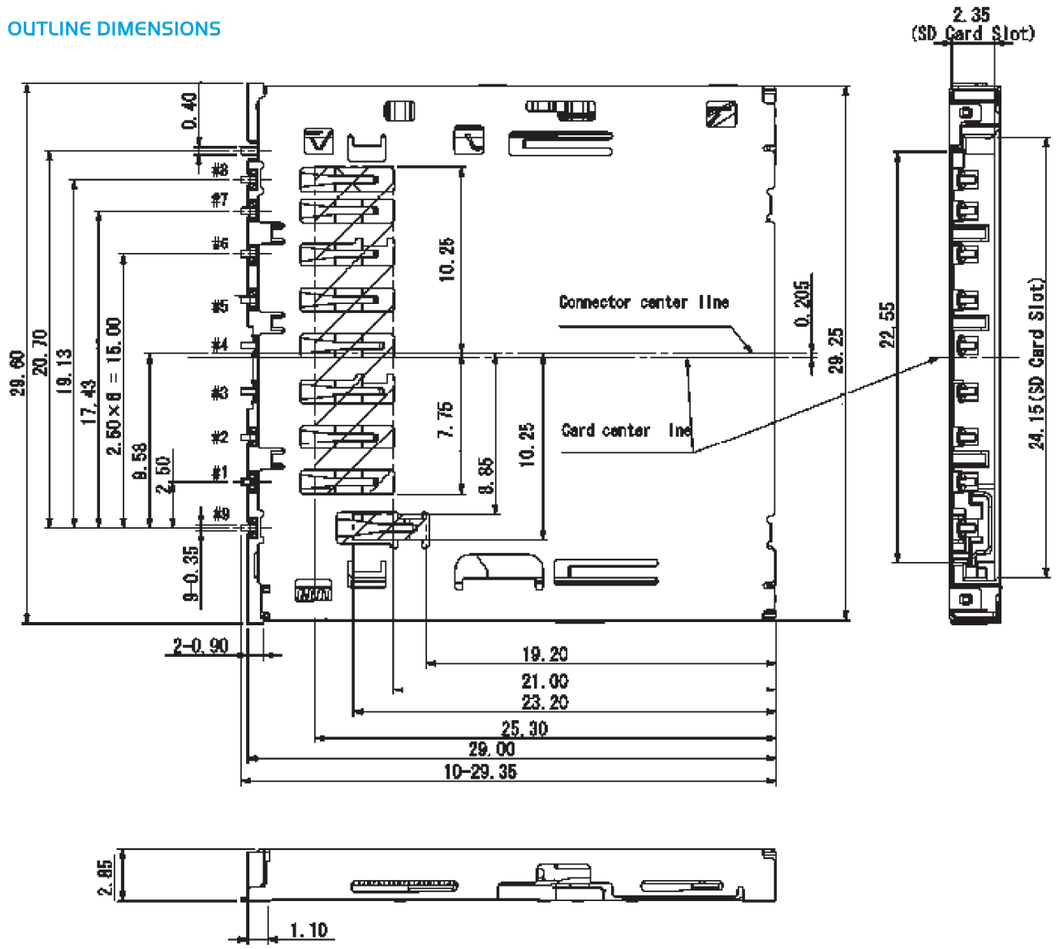

Downloaded from Arrow.com.

YAMAICHI ELECTRONICS
SERIES FPS
SD CARD AND MMC CONNECTOR - SPECIAL SWITCH POSITION (REVERSED TYPE)

RECOMMENDED PCB LAYOUT FOR FPS009-2970-0

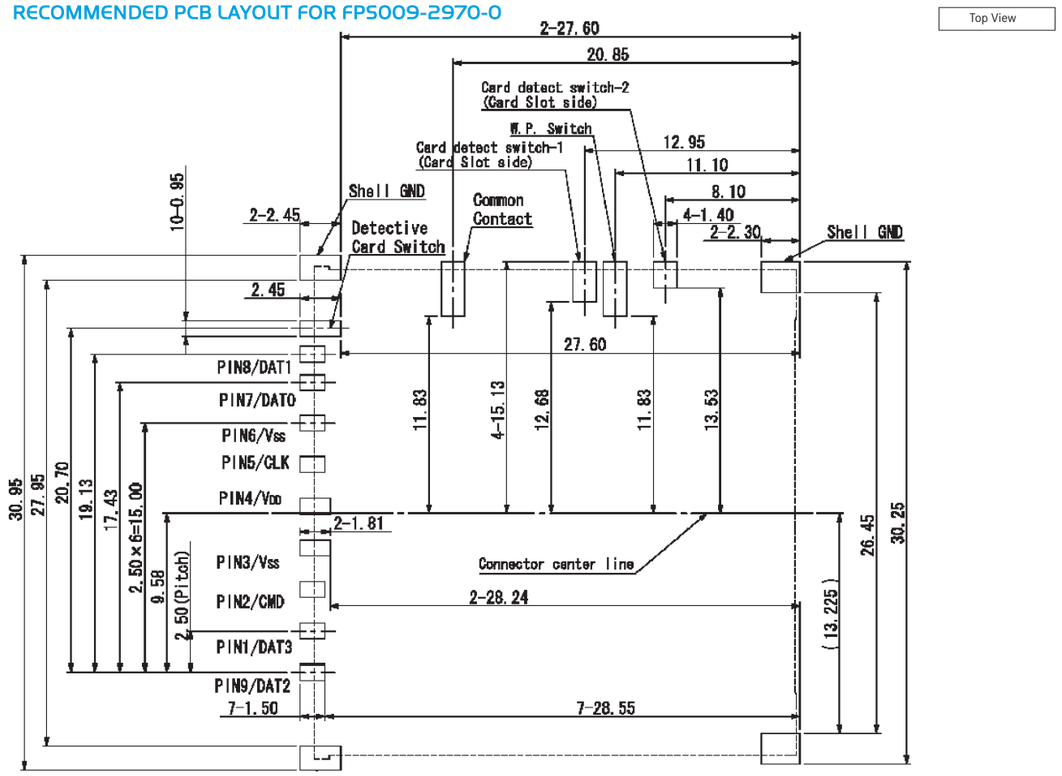

CIRCUIT DIAGRAM FOR SWITCH

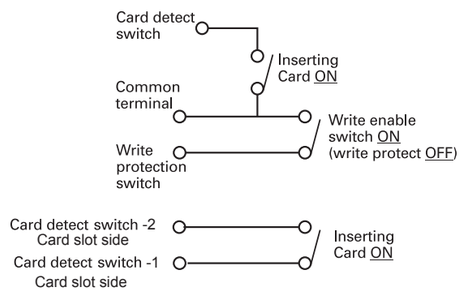

CARD INSERTION DETAILS

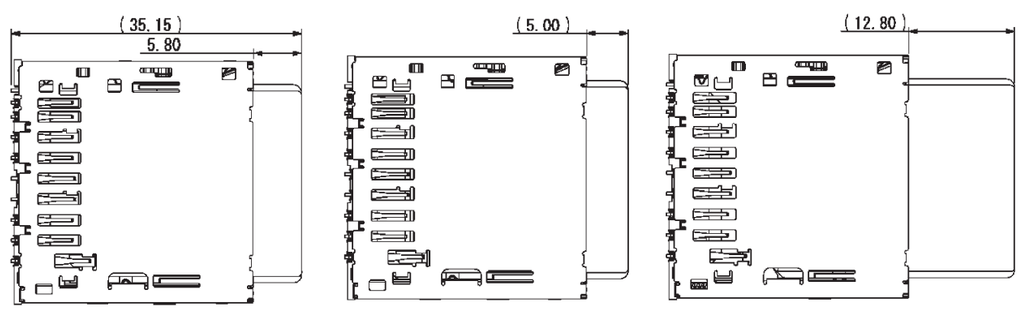

Card locked position | Card pushed position | Card eject position

SPECIFICATIONS

Insulation Resistance:	1,000MΩ min. at 500V DC
Withstanding Voltage:	500V ACrms for 1 minute
Contact Resistance:	100mΩ at 1mA / 20mV max.
Voltage Rating:	250Vrms AC
Current Rating:	0.5A
Operating Temp. Range:	-25°C to +85°C
Coplanarity:	≤ 0.15mm
Mating Cycles:	10,000 (office environment)

PART NUMBER

FPS 009 - 300* - BL

- FPS — Series No.
- 009 — Number of Contacts
- 300* — Design No.
- BL — 1 = with Ejector; 2 = without Ejector; 3 = without Ejector and Switche

MATERIALS AND FINISH

Insulator:	LCP
Shielding plate:	Stainless, t = 0.23
Contacts:	Copper Alloy
Contact Area:	Ni-Au
Solder Tails:	NI-SnCu
Write Protection:	Copper Alloy, Ni-Au
Card Detector:	Copper Alloy, Ni-Au
Ejector:	LCP

FEATURES

- Easy operation by manual insertion / extraction
- 3 step sequential contacting design
- Card detector and write protection (optional)
- Tape and Reel packaging (500 pcs / reel)
- RoHS2011/65/EU

AUTOMOTIVE COMPLIANT

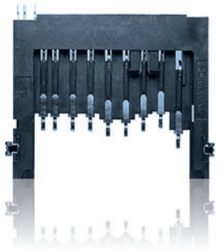

OUTLINE DIMENSIONS

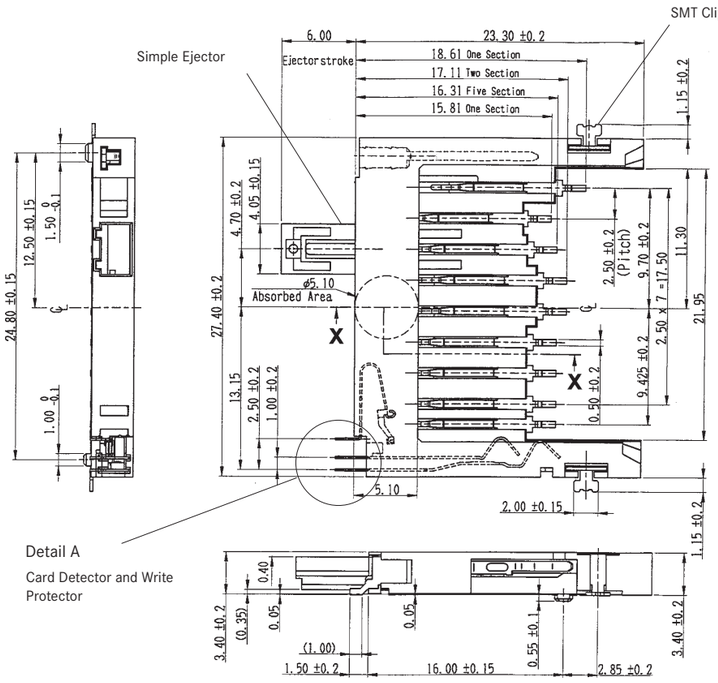

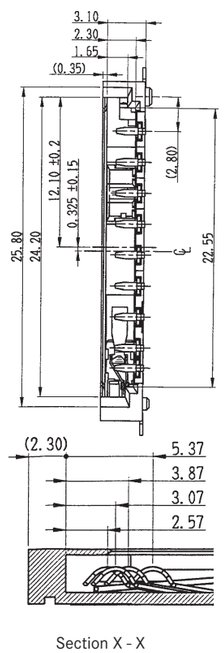

FUNCTION TABLE

Part Number	Ejector	Card Detector	SMT Clips	Write Protection Switch
FPS009-3001-BL	Yes	Yes	Yes	Yes
FPS009-3002-BL	-	Yes	Yes	Yes
FPS009-3003-BL	-	-	Yes	-

Downloaded from Arrow.com.

RECOMMENDED PCB LAYOUTS FPS009-3001-BL AND FPS009-3002-BL

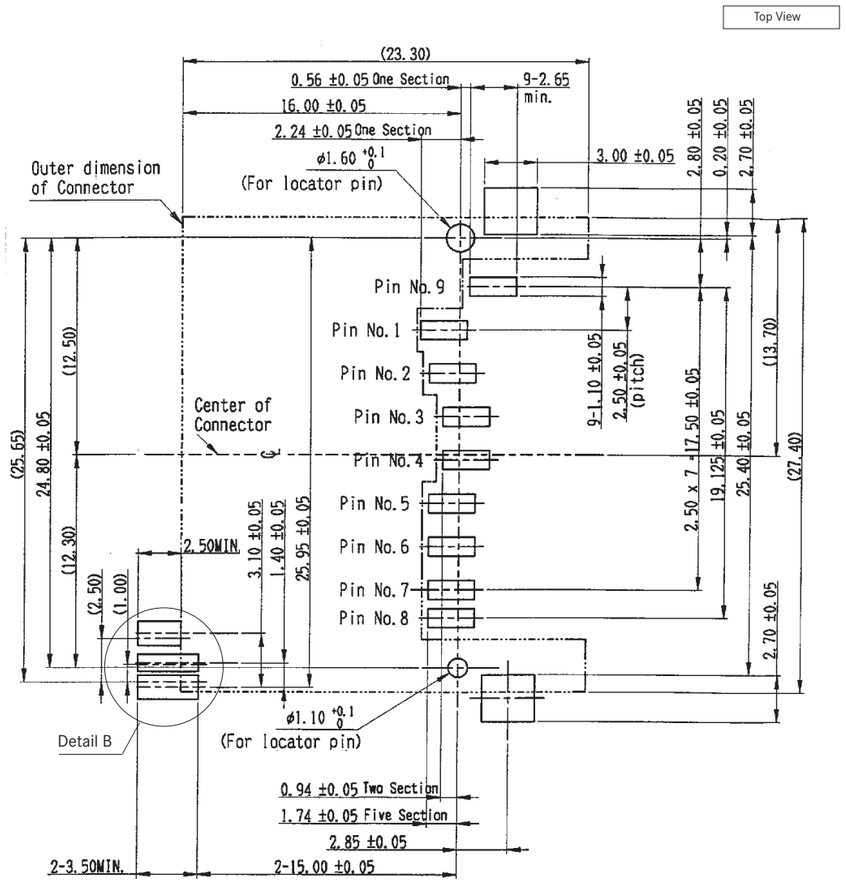

DETAIL A (CARD DETECTOR / WRITE PROTECTOR)

FPS009-3001-BL and FPS009-3002-BL

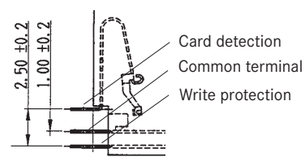

DETAIL B (PCB LAYOUTS)

FPS009-3001-BL and FPS009-3002-BL

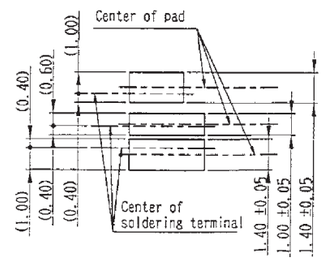

CIRCUIT DIAGRAM FOR SWITCH

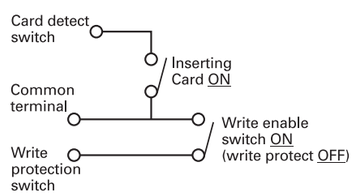

YAMAICHI ELECTRONICS

SERIES FPS
SD CARD AND MMC CONNECTOR - MANUAL INSERTION (SHORT TYPE)

SPECIFICATIONS

Insulation Resistance:	1,000MΩ min. at 500V DC
Withstanding Voltage:	500V ACrms for 1 minute
Contact Resistance:	100mΩ at 1mA / 20mV max.
Voltage Rating:	250Vrms AC
Current Rating:	0.5A
Operating Temp. Range:	-25°C to +85°C
Coplanarity:	≤ 0.15mm
Mating Cycles:	10,000 (office environment)

PART NUMBER

FPS 009 - 3202-BL

- Series No.
- Number of Contacts
- Design No.

MATERIALS AND FINISH

Insulator:	LCP
Plate:	Stainless Steel
Contacts:	Copper Alloy
Contact Area:	Ni-Au
Solder Tails:	Ni-Sn
Write Protection:	Copper Alloy, Ni-Au
Card Detector:	Copper Alloy, Ni-Au

FEATURES

- Connector for both card types (SD and MMC card)
- Easy operation by manual insertion / extraction
- Short housing (20.3mm instead of 23.3mm)
- 3 step sequential contacting design
- With card retention mechanism
- With card detector and write protection
- Tape and Reel packaging
- RoHS2011/65/EU

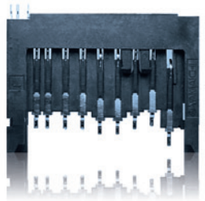

OUTLINE DIMENSIONS

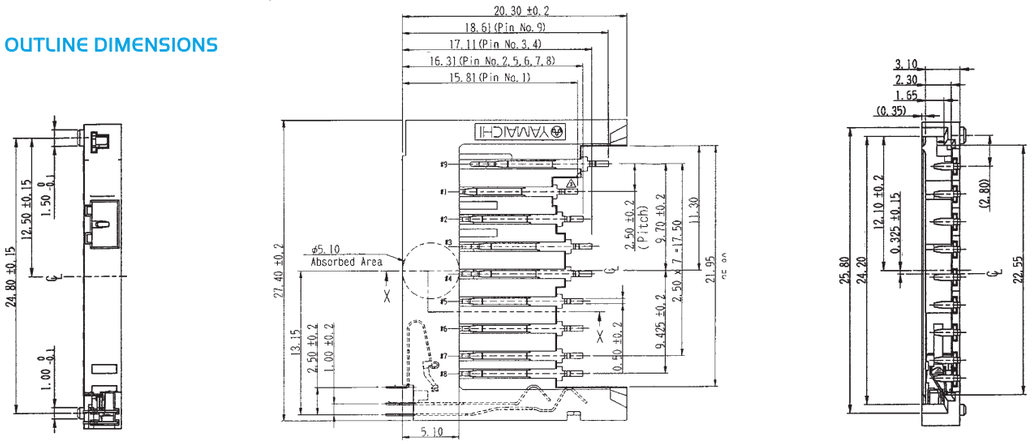

RECOMMENDED PCB LAYOUT FPS009-3202-BL

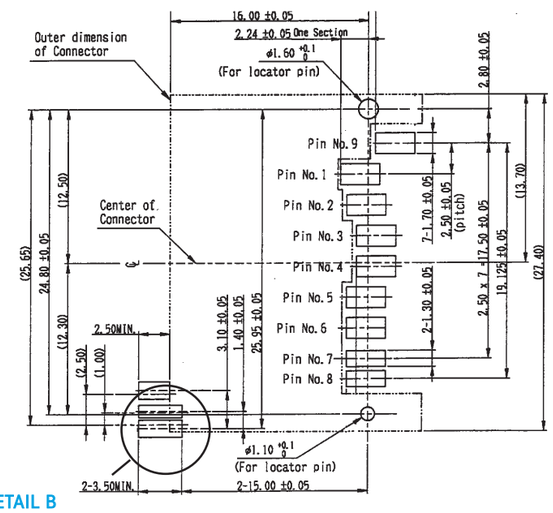

DETAIL B

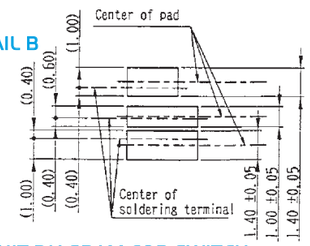

CIRCUIT DIAGRAM FOR SWITCH

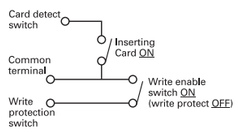

DETAIL A (CARD DETECTOR / WRITE PROTECTOR)

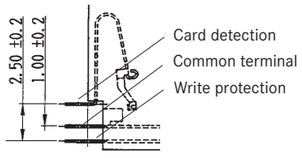

Downloaded from Arrow.com.

YAMAICHI ELECTRONICS

SERIES FPS
SD CARD AND MMC CONNECTOR - ONE ACTION LOCK TYPE

SPECIFICATIONS

Insulation Resistance:	1,000MΩ min. at 500V DC
Withstanding Voltage:	500V ACrms for 1 minute
Contact Resistance:	100mΩ at 1mA / 20mV max.
Voltage Rating:	5V DC
Current Rating:	0.5A max.
Operating Temp. Range:	-30°C to +85°C
Mating Cycles:	100

PART NUMBER

FPS 009 - 4200-0 (03)

- Series No.
- Number of Contacts
- Design No.

MATERIALS AND FINISH

Insulator:	LCP
Contact:	Copper Alloy, Ni-Au

AUTOMOTIVE COMPLIANT

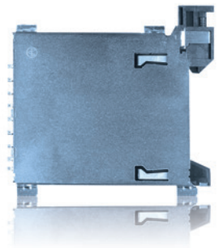

FEATURES

- Automatic locking function after insertion of SD card
- 2-point contact installation on all contact-terminals to ensure die-electric discontinuity prevention which may be caused by vibration and impact
- Zero sliding contact @100G shock (X Y Z direction)
- Metal shell cover with 4 GNDs (Solder tubs) to ensure EMI/ESD prevention performance
- RoHS2011/65/EU

OUTLINE DIMENSIONS

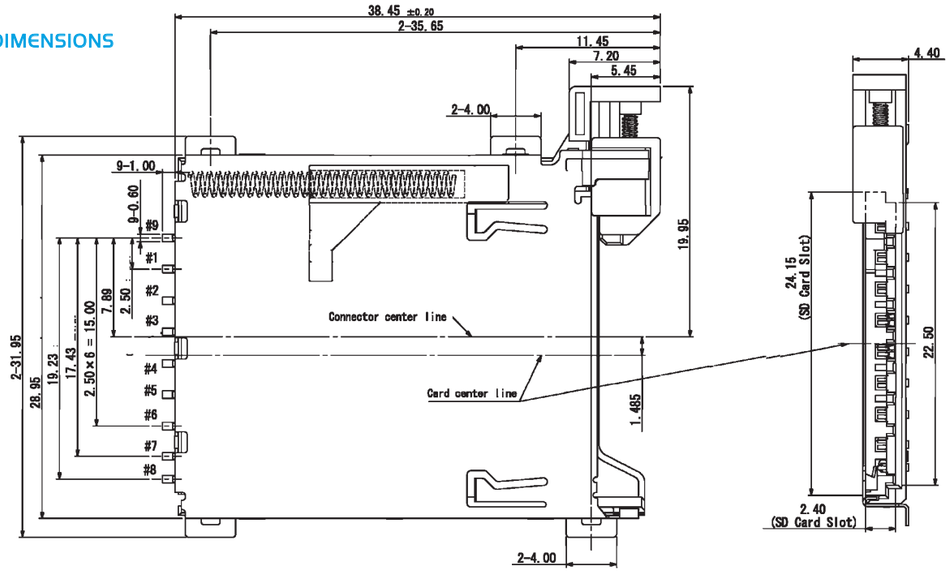

RECOMMENDED PCB LAYOUT

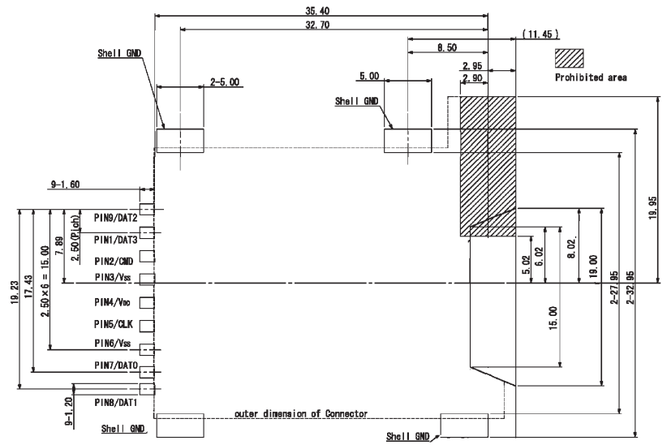

CARD INSERTION DETAILS

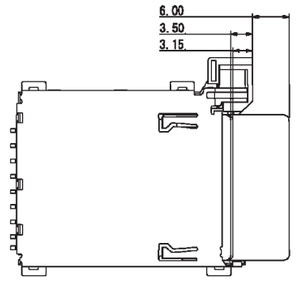

SERIES FPS
SD UHSII CARD CONNECTOR - PUSH / PUSH TOP MOUNT (SMT)

SPECIFICATIONS

Insulation Resistance:	1,000MΩ min. at 500V DC
Withstanding Voltage:	250V ACrms for 1 minute
Contact Resistance:	100mΩ max.
Voltage Rating:	5V DC
Current Rating:	1A max.
Operating Temp. Range:	-20°C to +60°C
Mating Cycles:	10,000

MATERIALS AND FINISH

Insulator:	LCP rated (UL94V-0) black
Contacts:	Phosphor Bronze at contact area
Contact Plating:	Selective Gold over Nickel
Shell	Stainless Steel

FEATURES

- SD Card Reader according to Spec SD4.0
- Push/Push type with soft locking mechanism
- With card detection switch
- RoHS2011/65/EU

PART NUMBER

FPS 017T - 2000 - FL - TRAY

- Series No.
- Number of Contacts 19
- Design No.
- Contacts: Au Flash Plating
- Packing Type: Tray

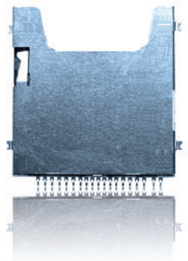

OUTLINE DIMENSIONS

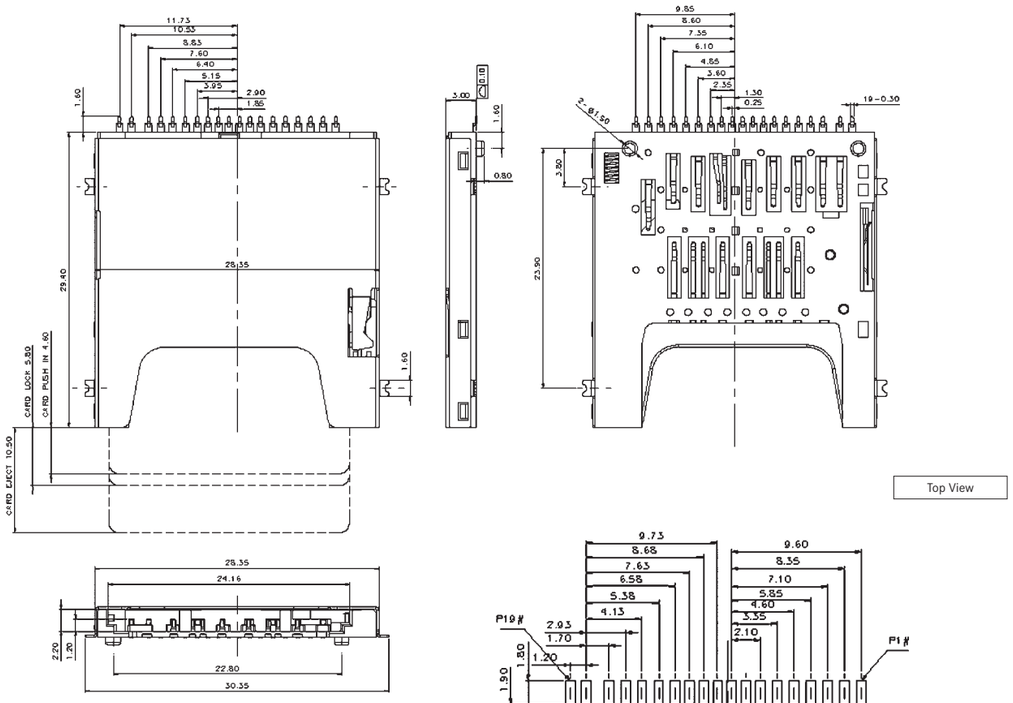

RECOMMENDED PCB LAYOUT

SPECIFICATIONS AND DRAWINGS ARE SUBJECT TO ALTERATION WITHOUT PRIOR NOTICE - DIMENSIONS IN MILLIMETER

Downloaded from Arrow.com.

SERIES FPS
SD UHSII CARD CONNECTOR - PUSH / PUSH REVERSED TYPE (SMT)

SPECIFICATIONS

Insulation Resistance:	1,000MΩ min. at 500V DC
Withstanding Voltage:	250V ACrms for 1 minute
Contact Resistance:	100mΩ max.
Voltage Rating:	5V DC
Current Rating:	1A max.
Operating Temp. Range:	-20°C to +60°C
Mating Cycles:	10,000

MATERIALS AND FINISH

Insulator:	LCP rated (UL94V-0) black
Contacts:	Phosphor Bronze at contact area
Contact Plating:	Selective Gold over Nickel
Shell	Stainless Steel

FEATURES

- SD Card Reader according to Spec SD4.0
- Push/Push type with soft locking mechanism
- With card detection switch
- RoHS2011/65/EU

PART NUMBER

FPS 017T - 1000 - FL - TRAY

- Series No.
- Number of Contacts 19
- Design No.
- Contacts: Au Flash Plating
- Packing Type: Tray

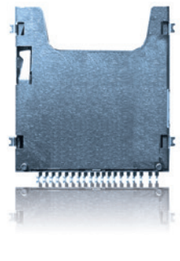

OUTLINE DIMENSIONS

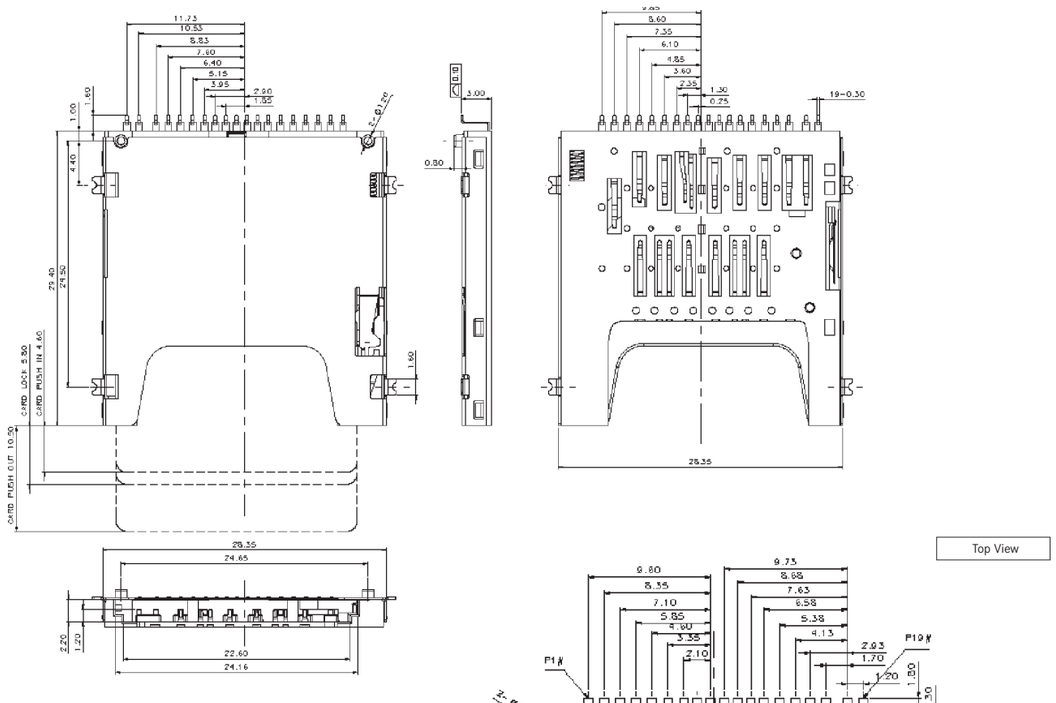

RECOMMENDED PCB LAYOUT

SPECIFICATIONS

Insulation Resistance:	1,000MΩ min. at 500V DC
Withstanding Voltage:	500V AC rms for 1 minute
Contact Resistance:	100mΩ at 1mA / 20mV max.
Voltage Rating:	50Vrms AC
Current Rating:	0.5A
Operating Temp. Range:	-25°C to +85°C
Coplanarity:	≤ 0.1mm
Reflow Temp.:	220°C for max.60 secs.,260° peak / 10 secs
Mating Cycles:	10,000 (office environment)

PART NUMBER

PJS 008 - 2130 - 0

- Series No.
- Number of Contacts
- Design No.
- 0 =Without Positioning Pins

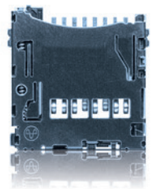

MATERIALS AND FINISH

Insulator:	LCP
Shielding Plate:	Stainless
Contacts:	Copper Alloy, Ni-Au

FEATURES

- Super low profile of 1.5mm
- Smooth extraction function by Push-in / Push-out of card
- Card detector and lock mechanism
- RoHS2011/65/EU
- Top Mount
- Special card brake (indepedant from card thickness)
- Tape & Reel packaging 1,500 pcs per reel

OUTLINE DIMENSIONS

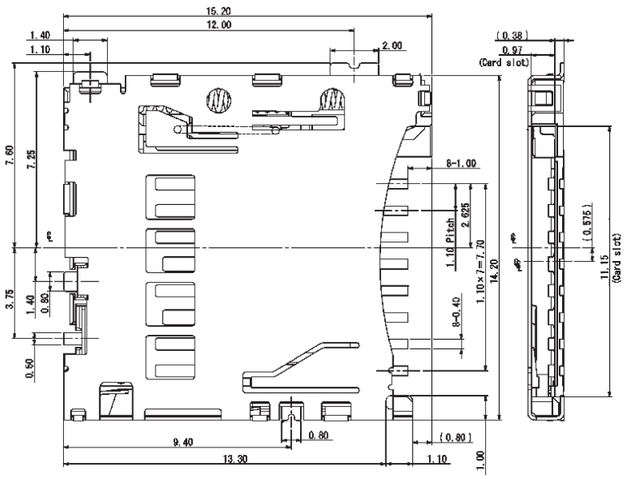

CARD INSERTION DETAILS

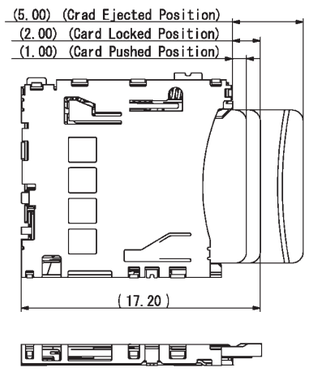

RECOMMENDED PCB LAYOUT

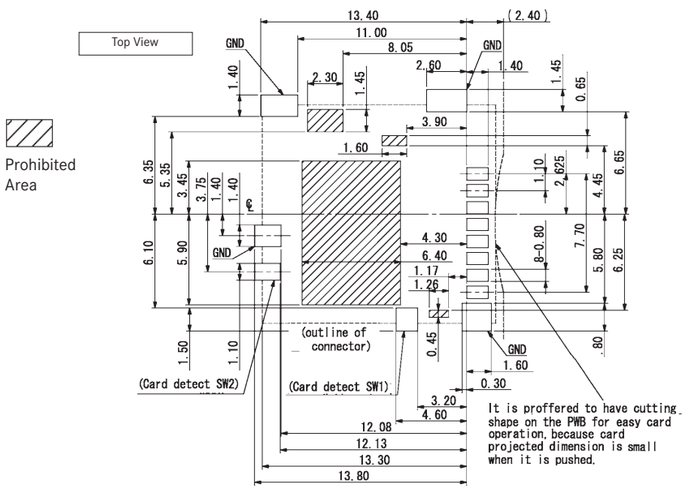

Downloaded from Arrow.com.

SPECIFICATIONS

Insulation Resistance:	500MΩ min. at 500V DC
Withstanding Voltage:	500V AC rms for 1 minute
Contact Resistance:	100mΩ at 1mA / 20mV max.
Voltage Rating:	50Vrms AC
Current Rating:	0.5A
Operating Temp. Range:	-25°C to +85°C
Coplanarity:	≤ 0.1mm
Reflow Temp.:	220°C for max.60 secs.,260° peak / 10 secs.
Mating Cycles:	10,000 (office environment)

PART NUMBER

PJS 008 - 2120-0

- Series No.
- Number of Contacts
- Design No.

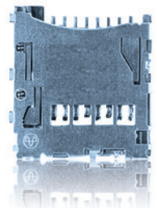

MATERIALS AND FINISH

Insulator:	LCP
Shielding Plate:	Stainless
Contacts:	Copper Alloy, Ni-Au

FEATURES

- Super low profile of 1.5mm
- Smooth extraction function by Push-in / Push-out of card
- Card detector and lock mechanism
- Tape & Reel packaging 1,500 pcs per reel
- Top Mount
- Special card brake (indepedant from card thickness)
- Lubricant assisted coil spring to slow card comming out
- RoHS2011/65/EU

OUTLINE DIMENSIONS

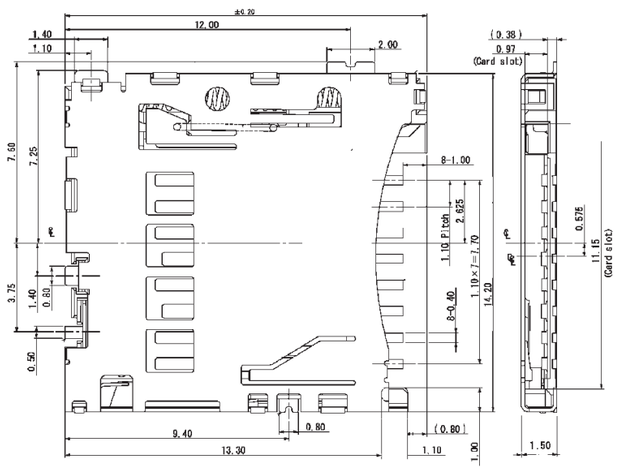

CARD INSERTION DETAILS

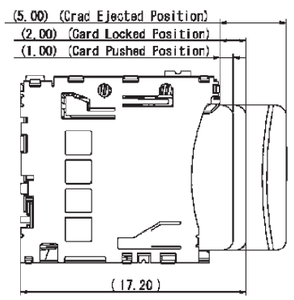

RECOMMENDED PCB LAYOUT

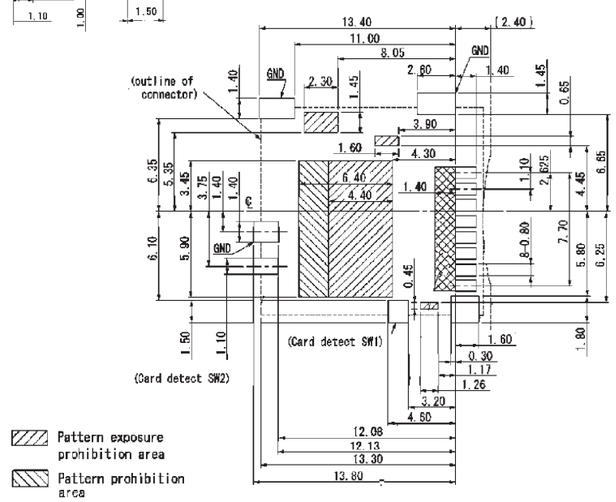

SPECIFICATIONS

Insulation Resistance:	1,000MΩ min. at 500V DC
Withstanding Voltage:	500V ACrms for 1 minute
Contact Resistance:	100mΩ at 1mA / 20mV max.
Voltage Rating:	50Vrms AC
Current Rating:	0.5A
Operating Temp. Range:	-25°C to +85°C
Mating Cycles:	10,000 (office environment) 3,000 (harsh environment)

PART NUMBER

PJS 008 - 2004 - * - VE

- Series No.
- Number of Contacts
- Design No.
- 0 = without Postioning Pin 1 = with Postioning Pin

AUTOMOTIVE COMPLIANT

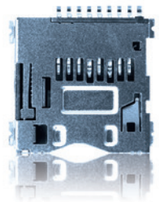

MATERIALS AND FINISH

Insulator:	LCP
Shielding Plate:	Stainless
Contacts:	Copper Alloy, Ni-Au

FEATURES

- Improved card detection feature, no wrong insertion of the card is possible
- Soft lock mechanism
- Card detection switch
- Tape & Reel packaging, 1,000 pcs. per reel
- RoHS2011/65/EU

OUTLINE DIMENSIONS

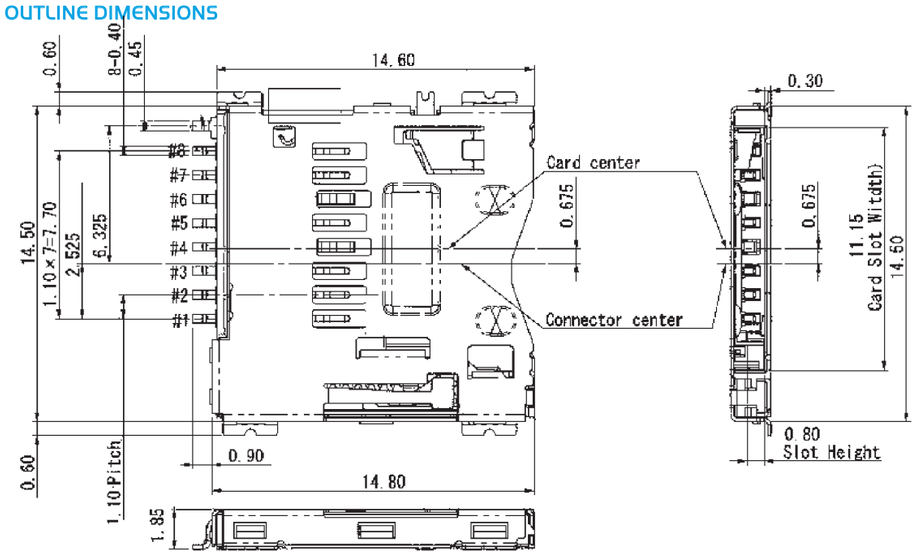

RECOMMENDED PCB LAYOUT

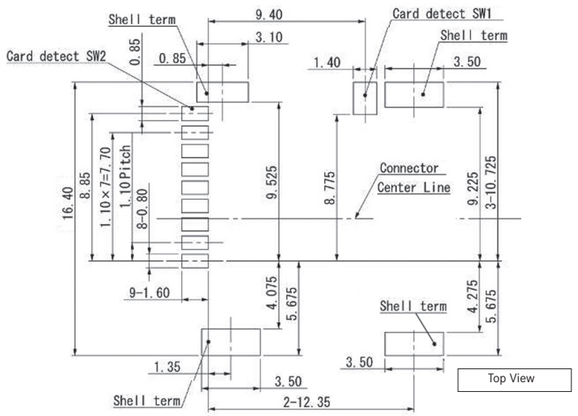

CARD INSERTION DETAILS

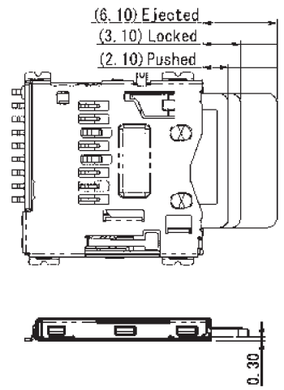

Downloaded from Arrow.com.

SPECIFICATIONS

Insulation Resistance:	1,000MΩ min. at 500V DC
Withstanding Voltage:	500V ACrms for 1 minute
Contact Resistance:	100mΩ at 1mA / 20mV max.
Voltage Rating:	50Vrms AC
Current Rating:	0.5A
Operating Temp. Range:	-25°C to +85°C
Mating Cycles:	10,000 (office environment) 3,000 (harsh environment)

PART NUMBER

PJS 008 - 2004 - 1

- Series No.
- Number of Contacts
- Design No.
- 1= with Postioning Pins

MATERIALS AND FINISH

Insulator:	LCP
Shielding Plate:	Stainless
Contacts:	Copper Alloy, Ni-Au

FEATURES

- Improved card detection feature, no wrong insertion of the card is possible
- Soft lock mechanism
- Card detection switch
- Tape & Reel packaging, 1,000 pcs. per reel
- RoHS2011/65/EU

OUTLINE DIMENSIONS

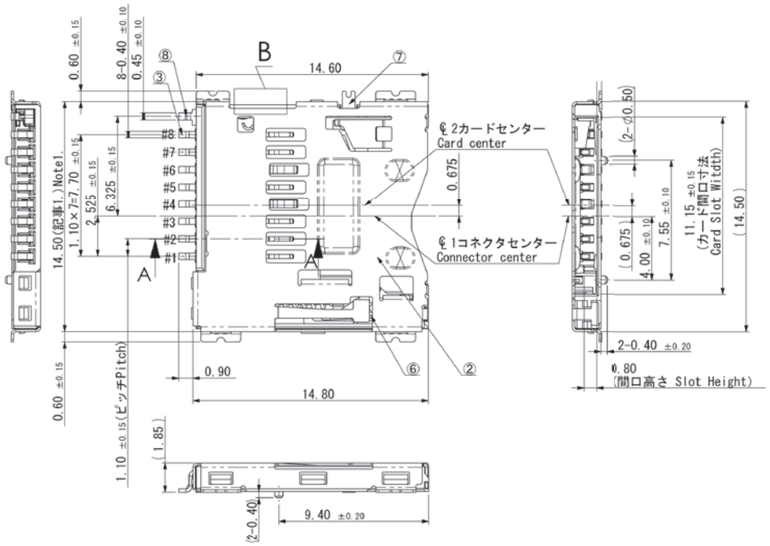

RECOMMENDED PCB LAYOUT

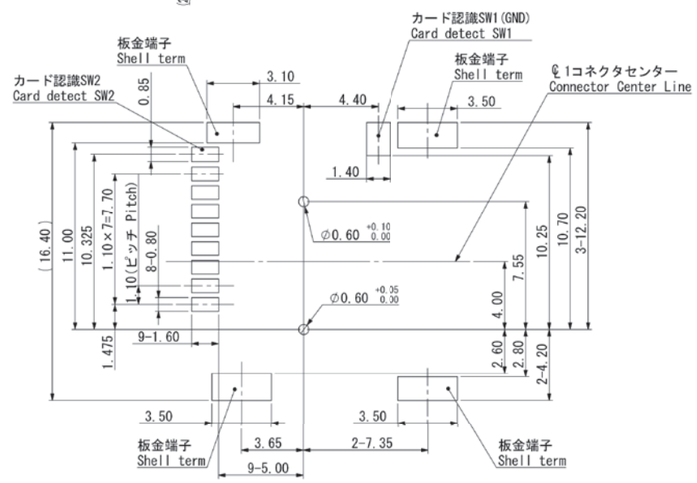

YAMAICHI ELECTRONICS

SERIES PJS
MICROSD CARD CONNECTOR - PUSH/PUSH WITH DUAL CONTACT (REV. TYPE)

SPECIFICATIONS

Insulation Resistance:	1,000MΩ min. at 500V DC
Withstanding Voltage:	500V ACrms for 1 minute
Contact Resistance:	100mΩ at 1mA / 20mV max.
Voltage Rating:	50Vrms AC
Current Rating:	0.5A
Operating Temp. Range:	-25°C to +85°C
Coplanarity:	≤ 0.1mm
Reflow Temp.:	220°C for max. 60 secs., 260° peak
Mating Cycles:	10,000 (office environment)

PART NUMBER

PJS 008 - 2005-0-VE

- Series No.
- Number of Contacts
- Design No.

AUTOMOTIVE COMPLIANT

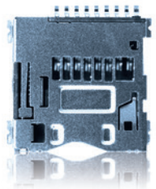

MATERIALS AND FINISH

Insulator:	LCP
Shielding Plate:	Stainless
Contacts:	Copper Alloy, Ni-Au

FEATURES

- Strong contact reliability for enhanced vibration and shock in autmotive by using dual contact
- Minimized design. W = 14.5 x L = 14.8mm
- Smooth extraction function by push-in / push-out
- With card detection
- Reverse mount
- Tape and Reel packagig 1,000 pcs. per reel
- RoHS2011/65/EU

OUTLINE DIMENSIONS

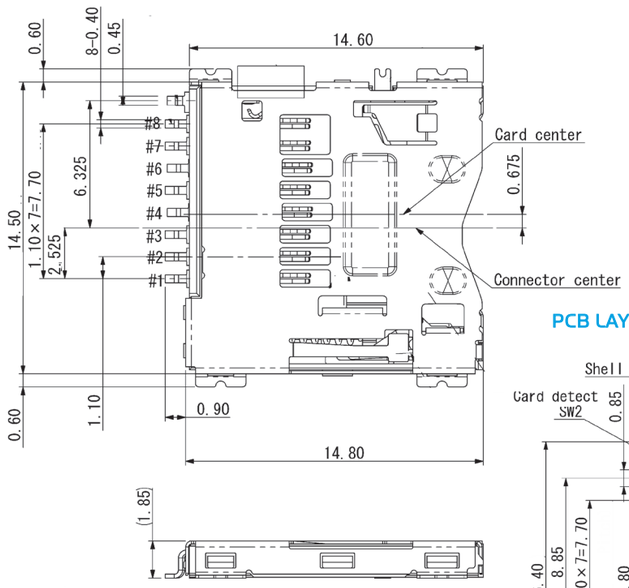

CARD INSERTION DETAILS

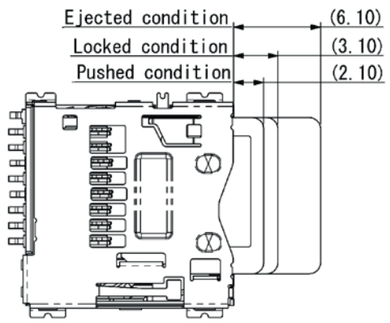

PCB LAYOUT

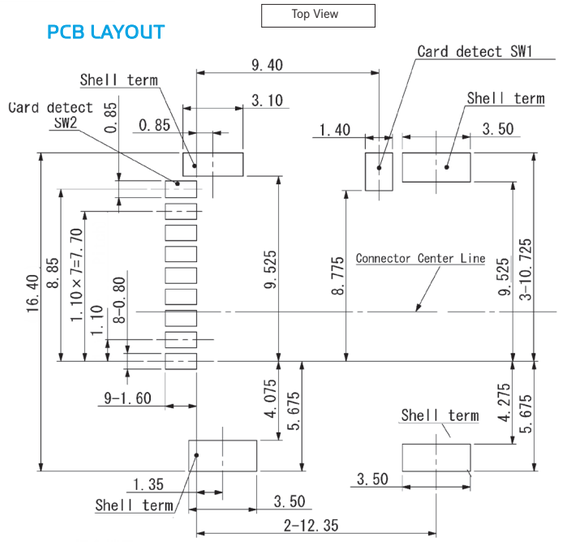

Downloaded from Arrow.com.

YAMAICHI ELECTRONICS

SERIES PJS
MICROSD CARD CONNECTOR - LOCKING TYPE

SPECIFICATIONS

Insulation Resistance:	1,000MΩ min. at 500V DC
Withstanding Voltage:	500V AC rms for 1 minute
Contact Resistance:	100mΩ at 1mA / 20mV max.
Voltage Rating:	5.0Vrms AC
Current Rating:	0.5A
Operating Temp. Range:	-25°C to +85°C
Coplanarity:	≤ 0.1mm
Reflow Temp.:	220°C for max.60 secs., 260° peak /10 secs.
Mating Cycles:	30 times

PART NUMBER

PJS 008 - 4100 - 0-VE

- Series No.
- Number of Contacts
- Design No.
- 0 = without Positioning Pins

MATERIALS AND FINISH

Insulator:	LCP
Shielding Plate:	Stainless
Contacts:	Copper Alloy, Ni-Au

FEATURES

- Two-point contact on all contacts
- Inner spring coil ensures card position also in vibration and shock conditions
- Metall shell for EMI protection
- RoHS2011/65/EU

OUTLINE DIMENSIONS

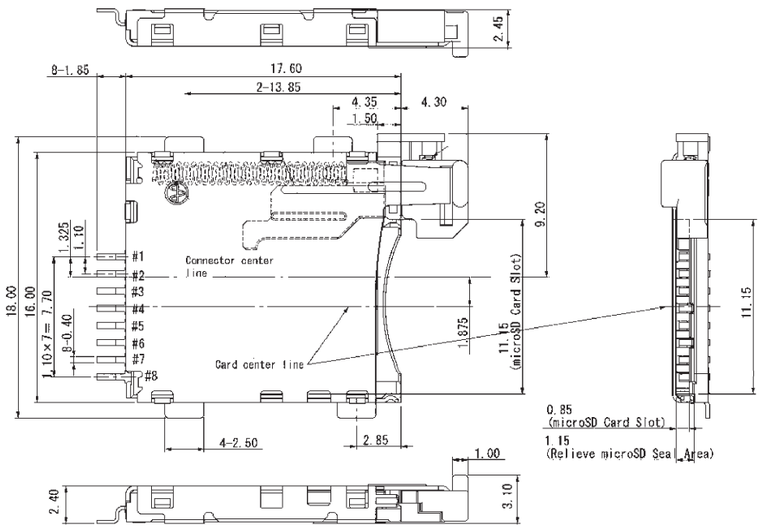

RECOMMENDED PCB LAYOUT

Prohibited Area

Button Support Area

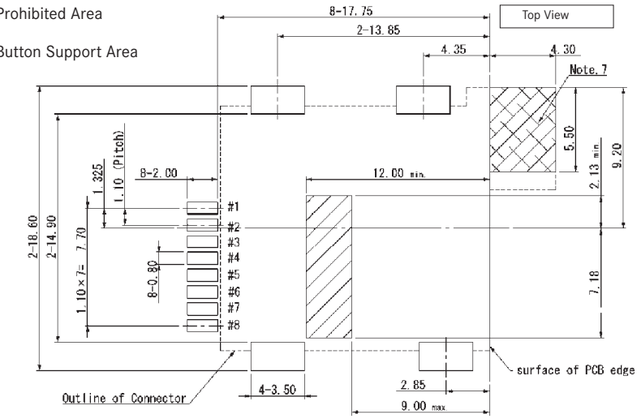

CARD INSERTION DETAILS

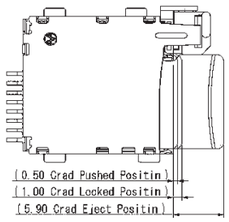

SERIES PJS
MICROSD CARD CONNECTOR - MANUAL TYPE (VERTICAL MOUNT)

SPECIFICATIONS

Insulation Resistance:	1,000MΩ min. at 250V DC
Withstanding Voltage:	250V AC rms for 1 minute
Contact Resistance:	100mΩ at 1mA / 20mV max.
Voltage Rating:	50Vrms AC
Current Rating:	0.5A
Operating Temp. Range:	-25°C to +85°C
Mating Cycles:	10,000 times, insertion / extraction

MATERIALS AND FINISH

Insulator:	LCP
DIP Terminals:	Brass, Plating Ni / Tin
Contacts:	PB, Plating Ni-Au / Tin

FEATURES

- Vertical insertion
- Small board space
- Robust dip soldering terminal
- Sequencial mating / unmating contacts
- RoHS2011/65/EU

PART NUMBER

PJS 008U - 3000 - 0

- Series No.
- Number of Contacts
- Design No.
- 0 = without Postioning Pins

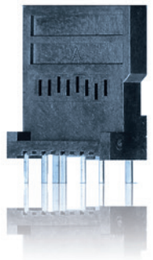

OUTLINE DIMENSIONS

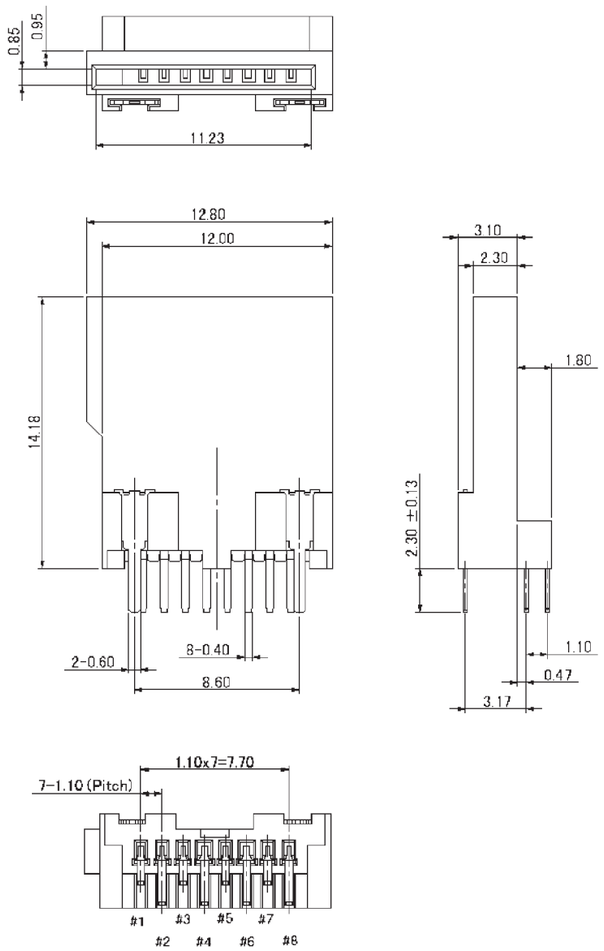

RECOMMENDED PCB LAYOUT

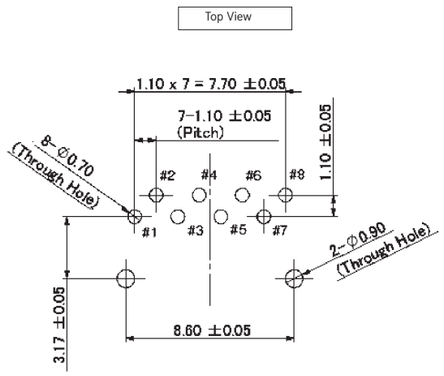

CARD INSERTION DETAILS

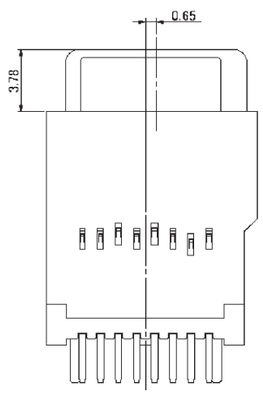

SPECIFICATIONS AND DRAWINGS ARE SUBJECT TO ALTERATION WITHOUT PRIOR NOTICE - DIMENSIONS IN MILLIMETER

Downloaded from Arrow.com.

SERIES FMS
SIM CARD CONNECTOR (PUSH/PUSH, LOW PROFILE, W. SWITCH)

SPECIFICATIONS

Insulation Resistance:	500MΩ min. at 500V DC
Withstanding Voltage:	250V ACrms for 1 minute
Contact Resistance:	100mΩ max. at 10mA / 20mV max.
Current Rating:	0.5A
Voltage Rating.	5.0Vrms
Operating Temp. Range:	-55°C to +85°C
Mating Cycles:	5,000 insertions

PART NUMBER

FMS006 - 2610 - 0

- Series No.
- Design No
- 0 = with Switch

MATERIALS AND FINISH

Insulator:	LCP
Contact Plating:	Copper Alloy
	Contact Area: Ni-Au
	Solder Tail: Ni-Au

AUTOMOTIVE COMPLIANT

FEATURES

- Conforms to GSM11.11 standard for the European mobile phone system
- With extra locking mechanism to secure the SIM card inside the connector during shock and vibration
- Smooth extraction function by Push / Lock mechanism
- With switch
- Top Mount Type
- Tape and Reel Packaging (500 pcs./reel)
- RoHS2011/65/EU

OUTLINE DIMENSIONS

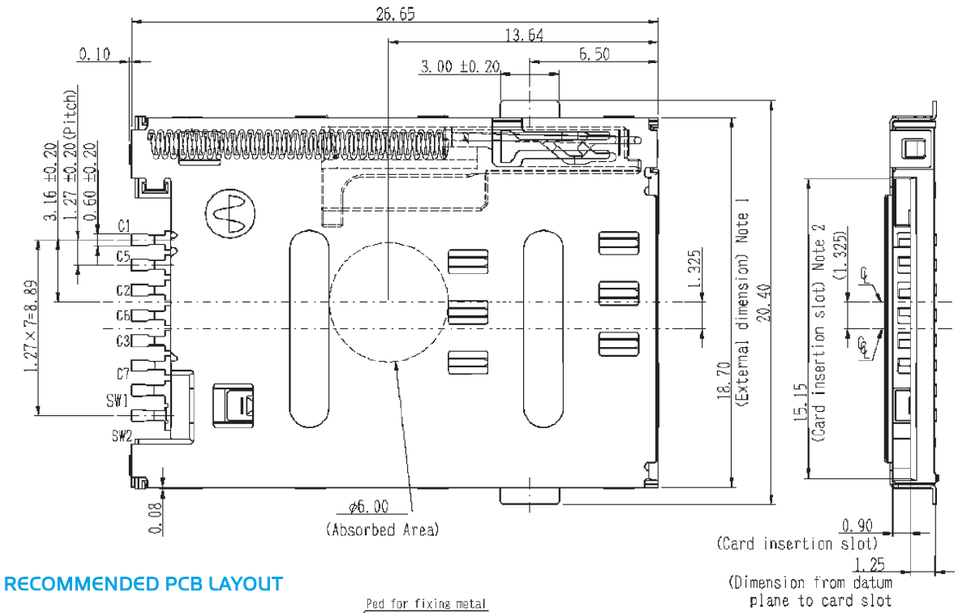

RECOMMENDED PCB LAYOUT

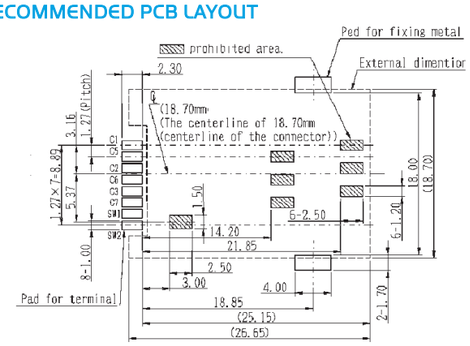

YAMAICHI ELECTRONICS

SERIES FMS
SIM CARD CONNECTOR (PUSH/PUSH, LOW PROFILE STD. TYPE W/O SWITCH)

SPECIFICATIONS

Insulation Resistance:	500MΩ min. at 500V DC
Withstanding Voltage:	250V ACrms for 1 minute
Contact Resistance:	100mΩ max. at 1mA / 20mV max.
Current Rating:	0.5A
Voltage Rating.	5.0Vrms
Operating Temp. Range:	-55°C to +85°C
Mating Cycles:	5,000 insertions

PART NUMBER

FMS006 - 2620 - 0

- Series No.
- Design No.

MATERIALS AND FINISH

Insulator:	LCP
Contact Plating:	Copper Alloy
	Contact Area: Ni-Au

FEATURES

- Conforms to GSM11.11 standard for the European mobile phone system
- Smooth extraction function by Push / Push mechanism
- Without switch
- Tape and Reel Packaging (800 pcs./reel)
- RoHS2011/65/EU

OUTLINE DIMENSIONS

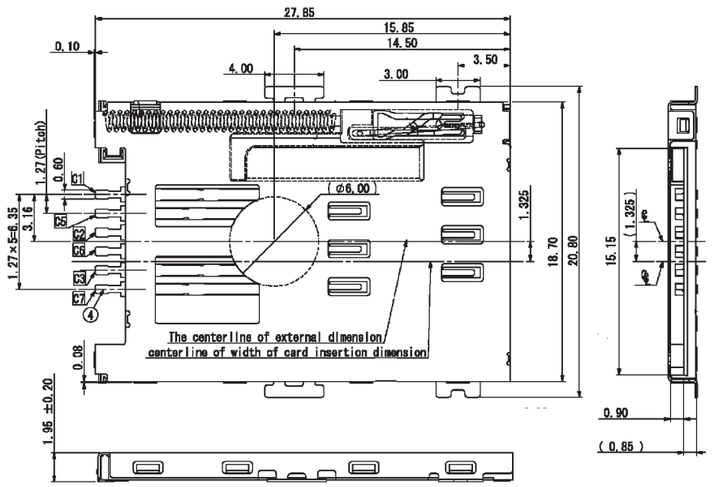

RECOMMENDED PCB LAYOUT (MOUNTING SIDE)

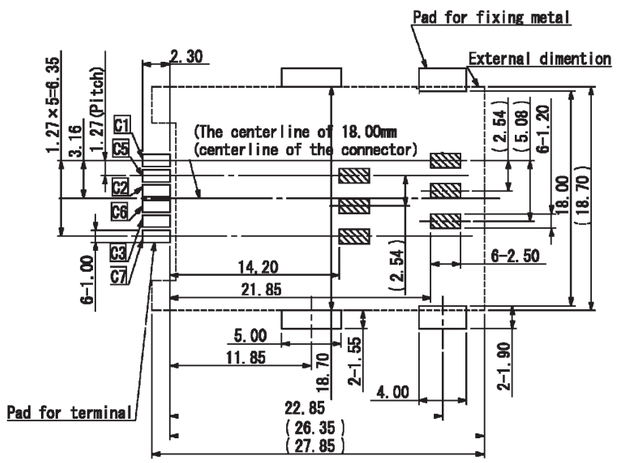

CARD INSERTION

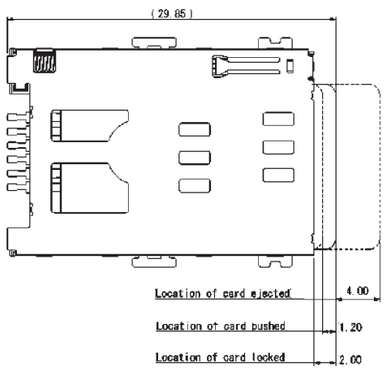

SPECIFICATIONS AND DRAWINGS ARE SUBJECT TO ALTERATION WITHOUT PRIOR NOTICE - DIMENSIONS IN MILLIMETER

Downloaded from Arrow.com.

YAMAICHI ELECTRONICS

SERIES FMS
SIM CARD CONNECTOR SMALL SIZE MANUAL (LOW PROFILE 1.40MM)

SPECIFICATIONS

Insulation Resistance:	500MΩ min. at 500V DC
Withstanding Voltage:	250V ACrms for 1 minute
Contact Resistance:	100mΩ max. at 10mA / 20mV max.
Current Rating:	0.5A
Voltage Rating.	5.0V AC rms
Operating Temp. Range:	-25°C to +85°C
Mating Cycles:	5,000 insertions

PART NUMBER

FMS006 - 5100 - 0

- Series No.
- Design No.

MATERIALS AND FINISH

Insulator	LCP
Shielding plate:	Stainless
Contact:	Copper Alloy, Ni-Au

FEATURES

- Manual type
- Static discontinuity prevention
- Tape and Reel (1,300 pcs./reel)
- Top mount
- Super low profile design ht. = 1.40mm
- RoHS2011/65/EU

OUTLINE DIMENSIONS

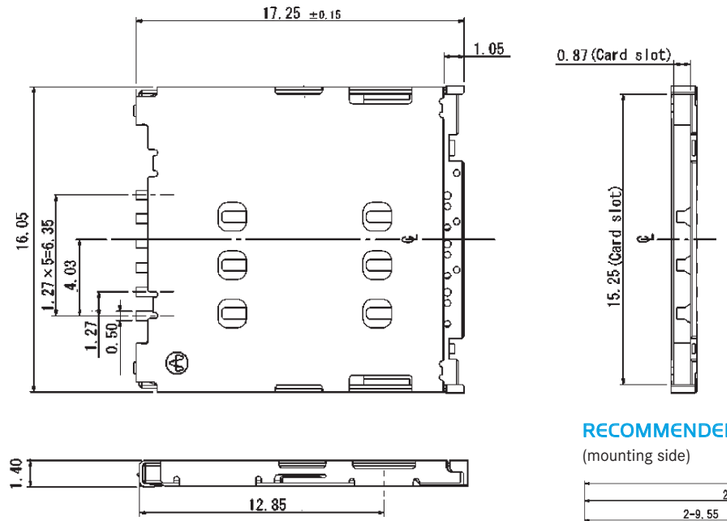

CARD INSERTION

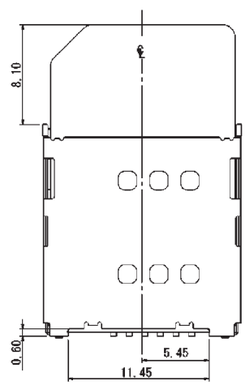

RECOMMENDED PCB LAYOUT

(mounting side)

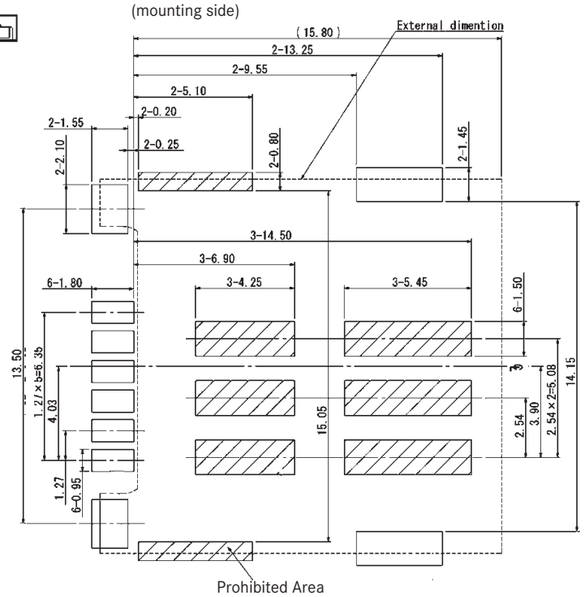

SPECIFICATIONS AND DRAWINGS ARE SUBJECT TO ALTERATION WITHOUT PRIOR NOTICE - DIMENSIONS IN MILLIMETER

SPECIFICATIONS

Insulation Resistance:	500MΩ min. at 500V DC
Withstanding Voltage:	250V ACrms for 1 minute
Contact Resistance:	100mΩ max. at 10mA / 20mV max.
Current Rating:	0.5A
Voltage Rating.	5.0Vrms
Operating Temp. Range:	-55°C to +85°C
Mating Cycles:	5,000 insertions

PART NUMBER

FMS006 - 2340 - 0

- Series No.
- Design No
- 0 = without Switch

AUTOMOTIVE COMPLIANT

MATERIALS AND FINISH

Insulator:	LCP
Contact:	Copper Alloy, Ni-Au

FEATURES

- Conforms to GSM11.11 standard for the European mobile phone system
- With extra locking mechanism to secure the SIM card inside the connector during shock and vibration
- Smooth extraction function by Push / Lock mechanism
- For assembly on top of the PC-Board
- Without switch
- Tape and Reel Packaging (500 pcs./reel)
- RoHS2011/65/EU

OUTLINE DIMENSIONS

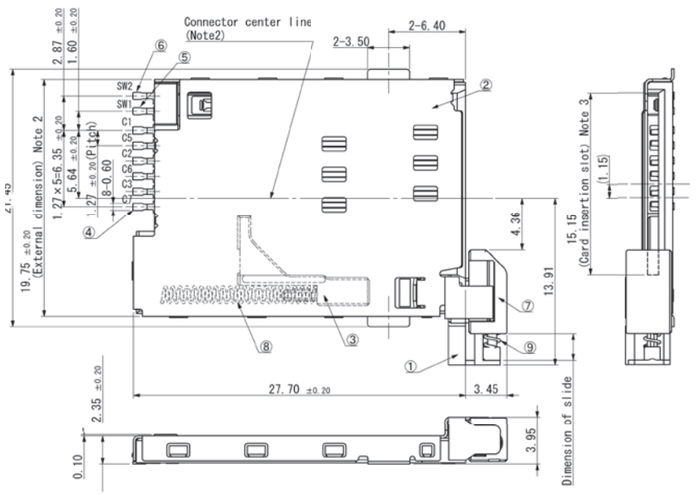

RECOMMENDED PCB LAYOUT (MOUNTING SIDE)

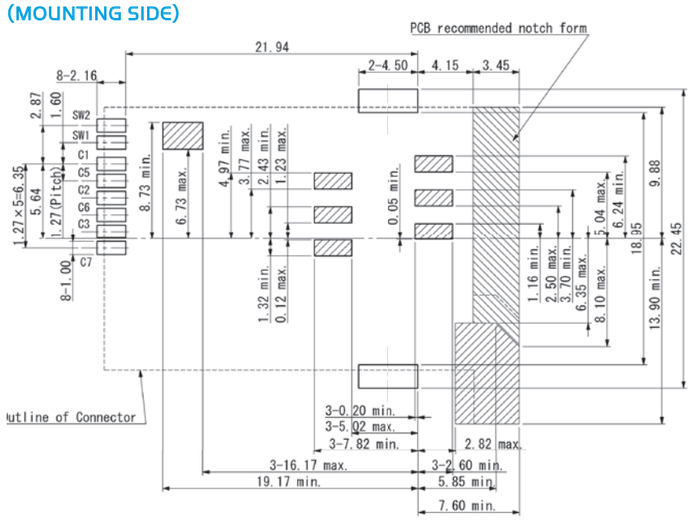

CARD INSERTION

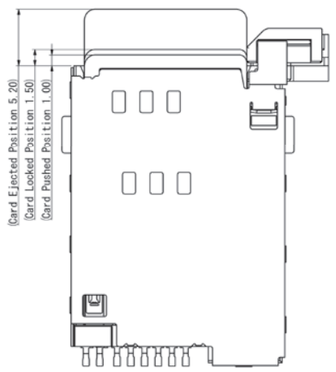

Downloaded from Arrow.com.

SPECIFICATIONS

Insulation Resistance:	500MΩ min. at 500V DC
Withstanding Voltage:	250V ACrms for 1 minute
Contact Resistance:	100mΩ max. at 10mA / 20mV max.
Current Rating:	0.5A
Voltage Rating.	5.0Vrms
Operating Temp. Range:	-55°C to +85°C
Mating Cycles:	5,000 insertions

PART NUMBER

FMS006 - 2341 - 0

- Series No.
- Design No
- 0 = without Switch

AUTOMOTIVE COMPLIANT

MATERIALS AND FINISH

Insulator:	LCP
Contact:	Copper Alloy, Ni-Au

FEATURES

- Conforms to GSM11.11 standard for the European mobile phone system
- With extra locking mechanism to secure the SIM card inside the connector during shock and vibration
- Smooth extraction function by Push / Lock mechanism
- RoHS2011/65/EU
- Without switch
- For assembly on top of the PC-Board
- Tape and Reel Packaging (500 pcs./reel)

OUTLINE DIMENSIONS

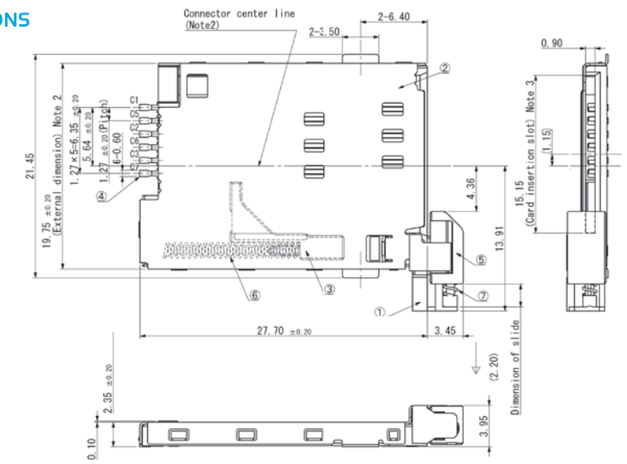

RECOMMENDED PCB LAYOUT (MOUNTING SIDE)

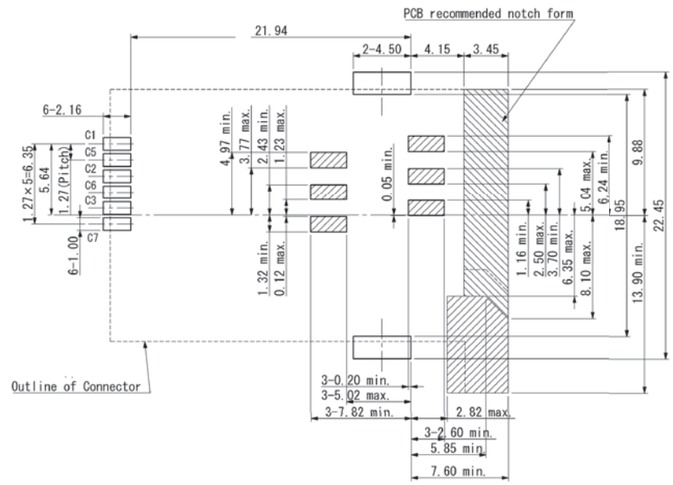

CARD INSERTION

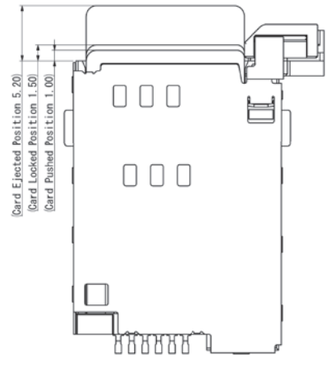

YAMAICHI ELECTRONICS

SERIES FMS
SIM CARD CONNECTOR TOP MOUNT (REMOVABLE TRAY)

SPECIFICATIONS

Insulation Resistance:	500MΩ min. at 500V DC
Withstanding Voltage:	250V ACrms for 1 minute
Contact Resistance:	100mΩ max. at 1mA / 20mV max. Current
Rating:	0.5A
Voltage Rating.	5V AC rms
Operating Temp. Range:	-25°C to +85°C
Mating Cycles:	5,000 insertions

MATERIALS AND FINISH

Insulator	LCP
Shielding plate:	Stainless
Contact:	Copper Alloy, Ni-Au

FEATURES

- Low profile 1.65mm
- Removable Tray
- Packaging Card Reader: Tape and Reel (1,200 pcs./Tape & Reel)
- Packaging for Trays: Tray (400 pcs.)
- RoHS2011/65/EU

PART NUMBER

FMS006 - 3710 - 0

Series No.

Design No.

PART NUMBER TRAY

FMA006-3700 - 0

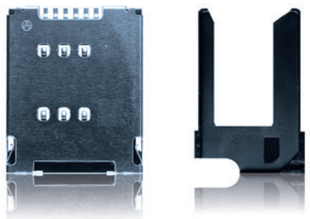

OUTLINE DIMENSIONS

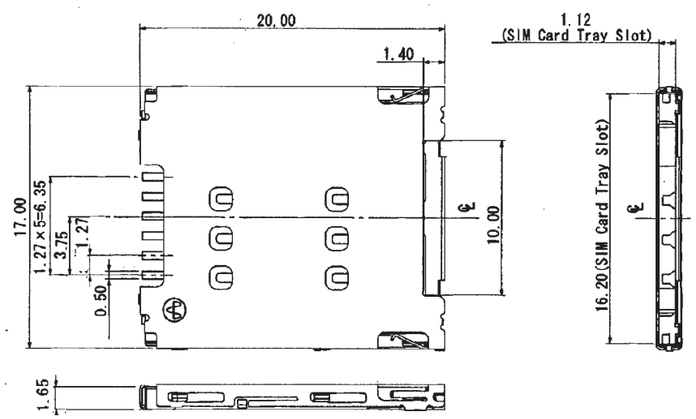

RECOMMENDED PCB LAYOUT (MOUNTING SIDE)

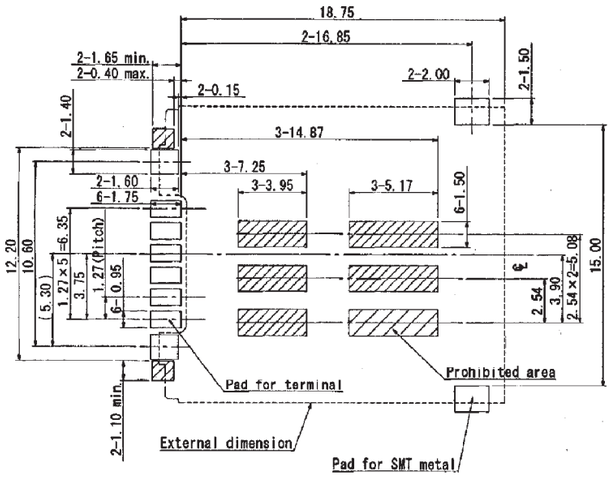

Downloaded from Arrow.com.

YAMAICHI ELECTRONICS

SERIES FMS
SIM CARD CONNECTOR REVERSED TYPE (REMOVABLE TRAY)

SPECIFICATIONS

Insulation Resistance:	500MΩ min. at 500V DC
Withstanding Voltage:	250V ACrms for 1 minute
Contact Resistance:	100mΩ max. at 1mA / 20mV max. Current
Rating:	0.5A
Voltage Rating.	5V AC rms
Operating Temp. Range:	-25°C to +85°C
Mating Cycles:	5,000 insertions

MATERIALS AND FINISH

Insulator	LCP
Shielding plate:	Stainless
Contact:	Copper Alloy, Ni-Au

FEATURES

- Low profile 1.65mm
- Removeable Tray
- Packaging Card Reader: Tape and Reel (1,200 pcs./Tape & Reel)
- Packaging for Trays: Tray (400 pcs.)
- RoHS2011/65/EU

PART NUMBER

FMS006 - 3810 - 0

Series No.

Design No.

PART NUMBER TRAY

FMA006-3800 -0

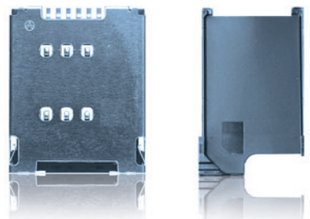

OUTLINE DIMENSIONS

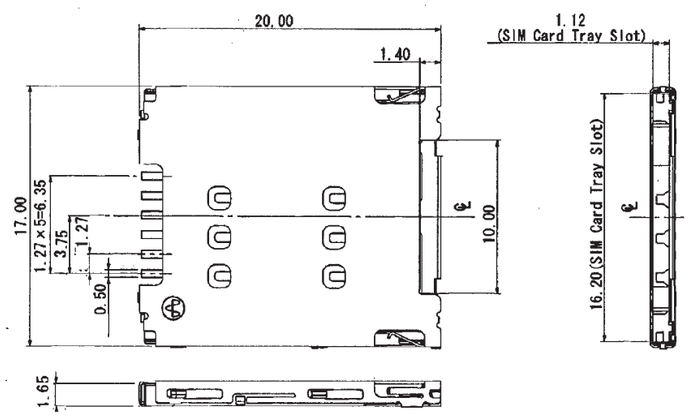

RECOMMENDED PCB LAYOUT (MOUNTING SIDE)

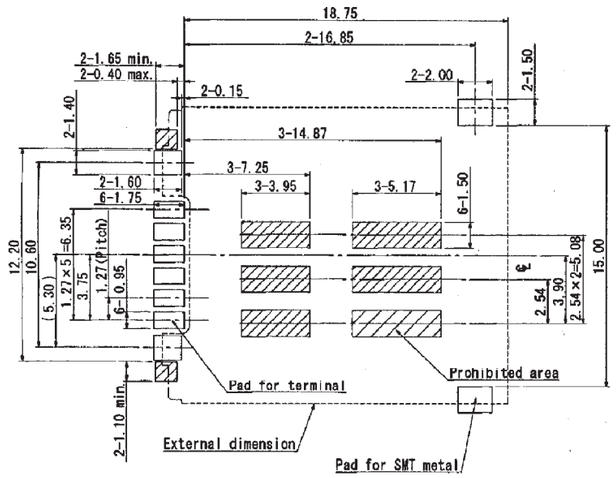

YAMAICHI ELECTRONICS

SERIES FMS
8 PIN SIM CARD CONNECTOR (PUSH/PUSH) WITH SWITCH

SPECIFICATIONS

Insulation Resistance:	1,000MΩ min. at 500V DC
Withstanding Voltage:	500V ACrms for 1 minute
Contact Resistance:	100mΩ max. at 1mA / 20mV max.
Current Rating:	0.5A
Voltage Rating.	5.0Vrms
Operating Temp. Range:	-55°C to +85°C
Mating Cycles:	5,000 insertions

PART NUMBER

FMS008 - 6001 - 0

- Series No.
- Design No.

AUTOMOTIVE COMPLIANT

MATERIALS AND FINISH

Insulator:	LCP
Contact:	Copper Alloy, Ni-Au

FEATURES

- 8 SIM contacts
- Super low profile of 1.5mm
- Top Mount for SMT soldering
- Smooth extraction function by Push/Push mechanism
- With switch
- Tape & Reel packaging 1,000 pcs per reel
- RoHS2011/65/EU

OUTLINE DIMENSIONS

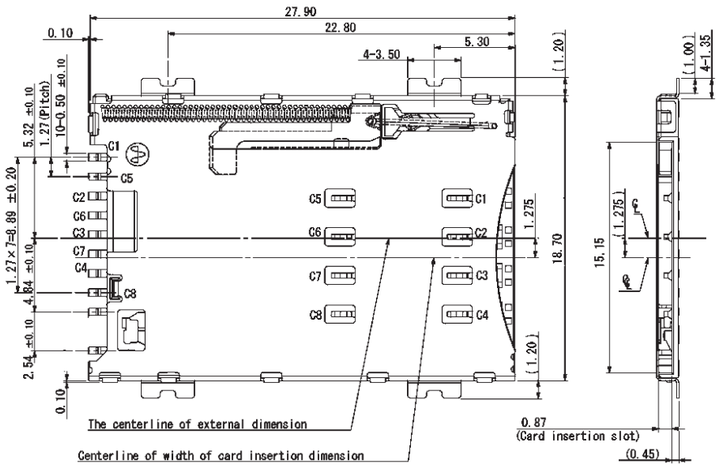

RECOMMENDED PCB LAYOUT

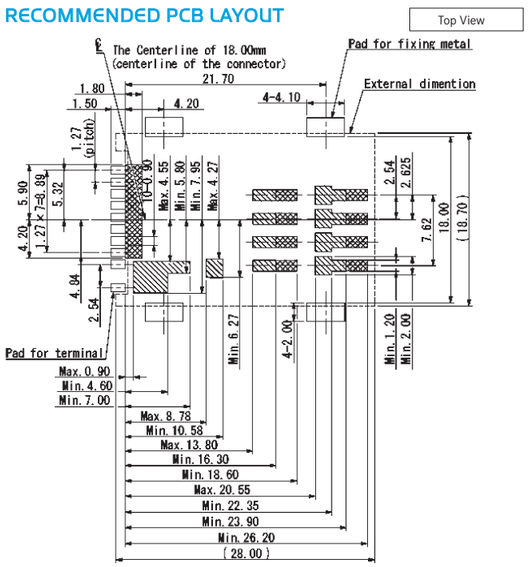

CARD INSERTION DETAILS

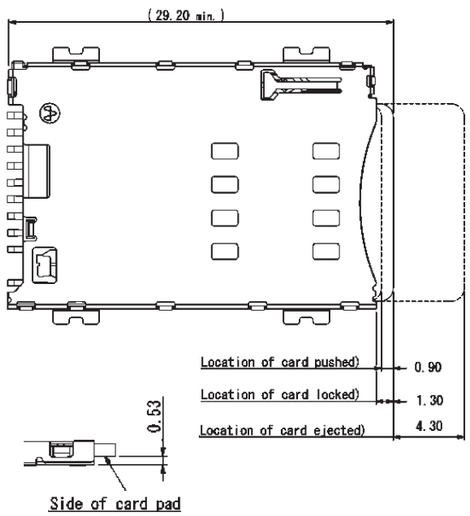

Downloaded from Arrow.com.

YAMAICHI ELECTRONICS

SERIES FUS
MICROSIM CARD CONNECTOR PULL EJECT TYPE (TOP MOUNT)

SPECIFICATIONS

Insulation Resistance:	500MΩ min. at 500V DC
Withstanding Voltage:	500V ACrms for 1 minute
Contact Resistance:	100mΩ max. at 1mA / 20mV max.
Current Rating:	0.5A
Voltage Rating.	5.0Vrms
Operating Temp. Range:	-25°C to +85°C
Mating Cycles:	5,000 insertions

PART NUMBER

FUS006 - 8500-0

- Series No.
- Design No.

AUTOMOTIVE COMPLIANT

MATERIALS AND FINISH

Insulator:	LCP
Contact:	Copper Alloy, Ni-Au

FEATURES

- Top mount type
- Super low profile ht. = 1.34mm max.
- EMI Protection (6 point GND)
- Tape and Reel packaging (1,000 pcs./reel)
- RoHS2011/65/EU

OUTLINE DIMENSIONS

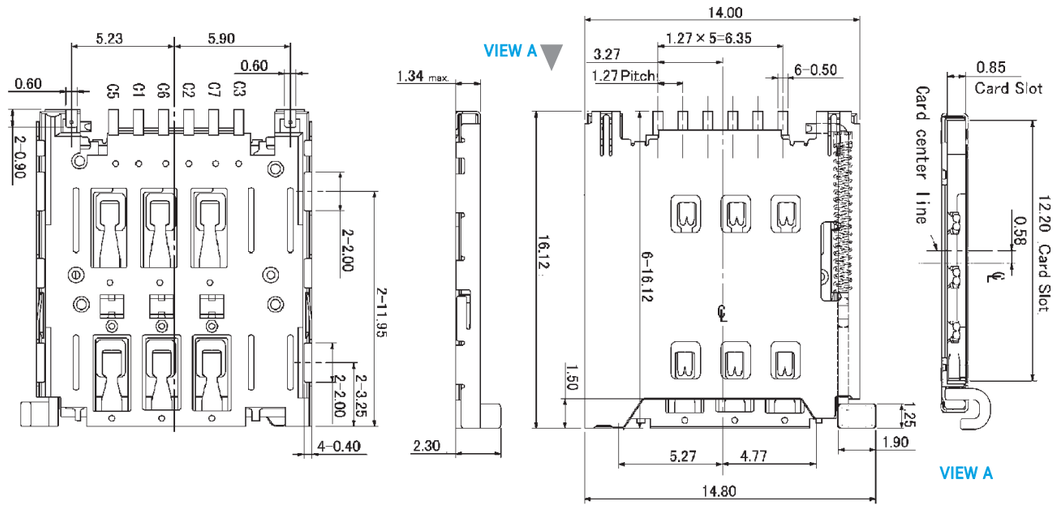

CARD INSERTION

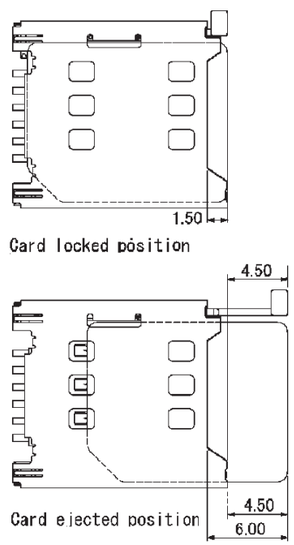

RECOMMENDED PCB LAYOUT

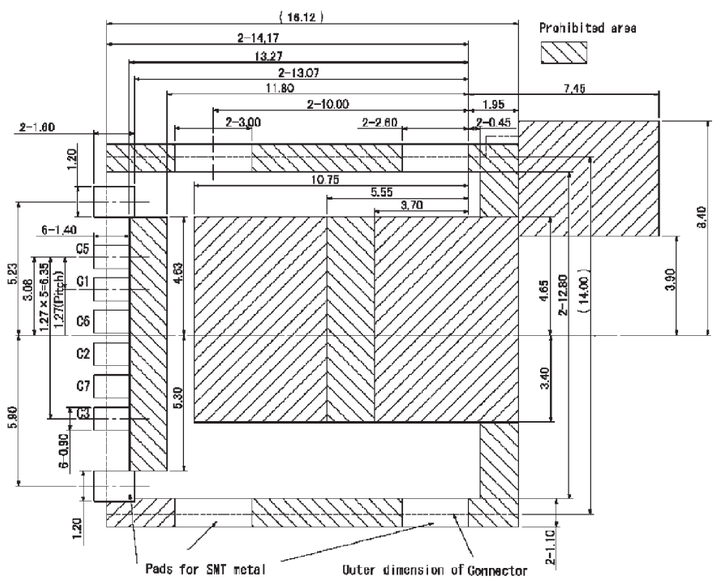

YAMAICHI ELECTRONICS

SERIES FUS
MICROSIM CARD CONNECTOR TRAY TYPE FOR MICRO & NANOSIM TYPE

AUTOMOTIVE COMPLIANT

SPECIFICATIONS

Insulation Resistance:	500MΩ min.
Withstanding Voltage:	250V ACrms for 1 minute
Contact Resistance:	100mΩ max. at 1mA / 20mV max.
Current Rating:	0.5A
Voltage Rating.	5.0Vrms
Operating Temp. Range:	-25°C to +85°C
Mating Cycles:	5,000 insertions

MATERIALS AND FINISH

Insulator:	LCP
Contact :	Copper Alloy, t = 0.12, Ni-Au

FEATURES

- Reversed mount type
- One Card reader usable with two different trays for Nano or Micro Sim Cards
- Super low profile 1.15mm height
- RoHS2011/65/EU

PART NUMBER (WITHOUT TRAY)

FUS006 - 3210-0

- Series No.
- Design No.

PART NUMBER TRAY TYPE FOR MICROSIM

FUA006 - 3210-0

- Series No.
- Design No.

PART NUMBER TRAY TYPE FOR NANOSIM

FUA006 - 3220-0

- Series No.
- Design No.

OUTLINE DIMENSIONS

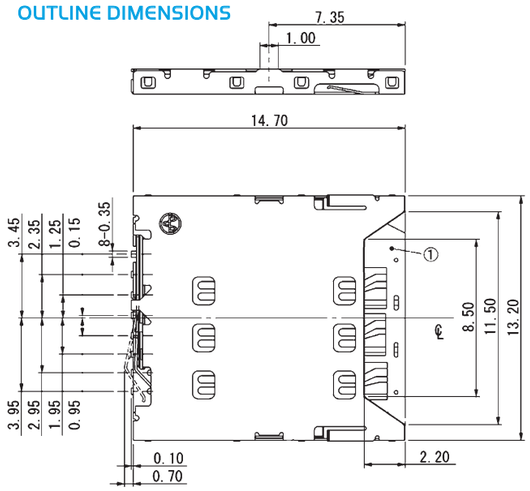

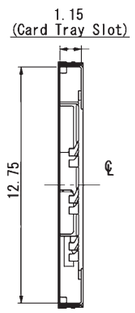

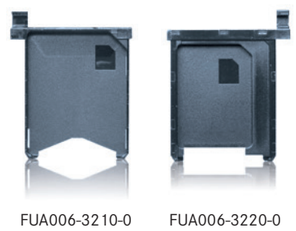

FUA006-3210-0 FUA006-3220-0

TRAY FUA3210-0, FOR MICROSIM

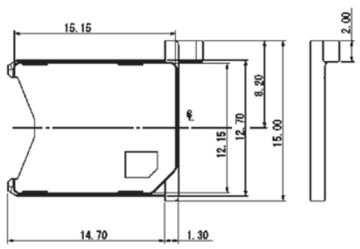

TRAY FUA3220-0, FOR NANOSIM

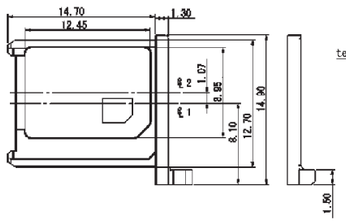

RECOMMENDED PCB LAYOUT

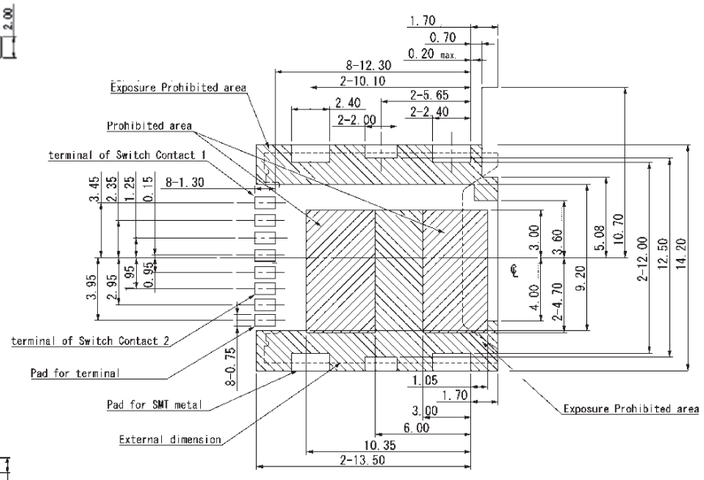

SPECIFICATIONS AND DRAWINGS ARE SUBJECT TO ALTERATION WITHOUT PRIOR NOTICE - DIMENSIONS IN MILLIMETER

Downloaded from Arrow.com.

YAMAICHI ELECTRONICS

SERIES CF
CFAST CONNECTOR 24 PINS, SMT 90° (W./WO. EJECTOR)

SPECIFICATIONS

Insulation Resistance:	1000MΩ at 500V DC
Withstanding Voltage:	500Vrms
Current Rating:	1A AC/DC max.
Contact Resistance:	40mΩ max. at 20mV max.
Operating Temp. Range:	-55°C to +85°C
Reflow Solder Temp.:	220°C min. / 60 sec., 260°C peak
Mating Cycles:	10,000 times

MATERIALS AND FINISH

Insulator:	Thermal Plasitc (UL94V-0)
Shell:	Steel
Contacts:	Copper Alloy
Plating:	Underplate - 50μ" ~ 100μ" Nickel Contact Area - Gold 15μ" selective Gold Solder Tails - T = 100μ" ~ 200μ" Tin

FEATURES

- CFast Type
- With or without Stand-off
- With or without Ejector
- RoHS2011/65/EU

PART NUMBER

CF 024 - S9 - BL - * - * - TRAY

- Series
- No. of Contacts
- SMT 90°
- BL = 15μ" Au selective Gold Plating
- 0 = without ejector 1 = with ejector
- 0 = without Stand-off 2 = 2mm Stand-of
- TRAY = Tray Packaging

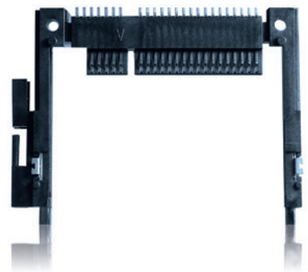

OUTLINE DIMENSIONS

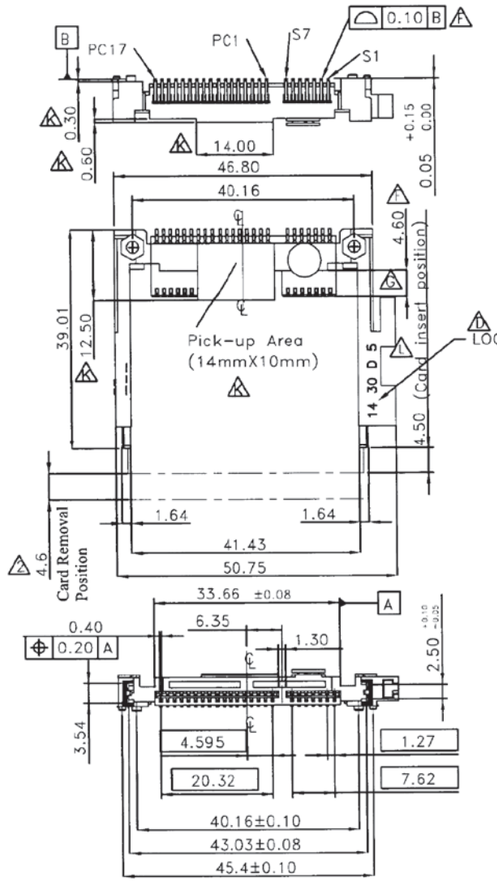

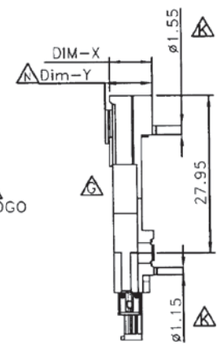

RECOMMENDED PCB LAYOUT

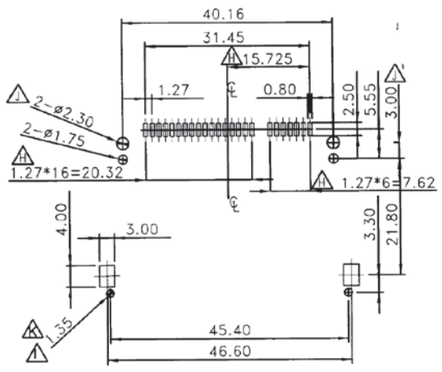

Recommended P.C.B LAYOUT
Tolerance : +/-0.05mm

SPECIFICATIONS AND DRAWINGS ARE SUBJECT TO ALTERATION WITHOUT PRIOR NOTICE - DIMENSIONS IN MILLIMETER

YAMAICHI ELECTRONICS

SERIES CF
COMPACT FLASH CARD CONNECTOR, TYPE I (W. AND W/O EJECTOR)

SPECIFICATIONS

Insulation Resistance:	1000MΩ at 500V DC
Withstanding Voltage:	500Vrms
Current Rating:	0.5A
Operating Temp. Range:	-20°C to +90°C
Reflow Solder Temp.:	220°C min./sec. 260°C peak
Mating Cycles:	10,000 times

MATERIALS AND FINISH

Insulator:	LCP, glass filled (UL94V-0)
SMT Metal:	Brass, pure Sn
Push Button:	Glass reinforced PBT (UL94V-0)
Cover:	Stainless Steel
Contacts:	Brass
Plating:	Contacts - Gold (15μ") over Nickel (40μ") Solder Tails - pure Sn

FEATURES

- Adapter for Compact Flash Card Type I
- With push button ejector (optional)
- RoHS2011/65/EU

PART NUMBER

CF 050P - 003 - * * DS

- Series
- No. of Contacts
- 90° SMT
- Ejector: 0 = Without 1 = Right Side
- Insulator Colour: 0 = White (standard) 1 = Black (on request only)
- Plating Area: Contacts: Gold (15μ") over 40μ" Nickel; Solder Tails: 100μ" Tin over 40μ" Nickels

OUTLINE DIMENSIONS (WITHOUT EJECTOR)

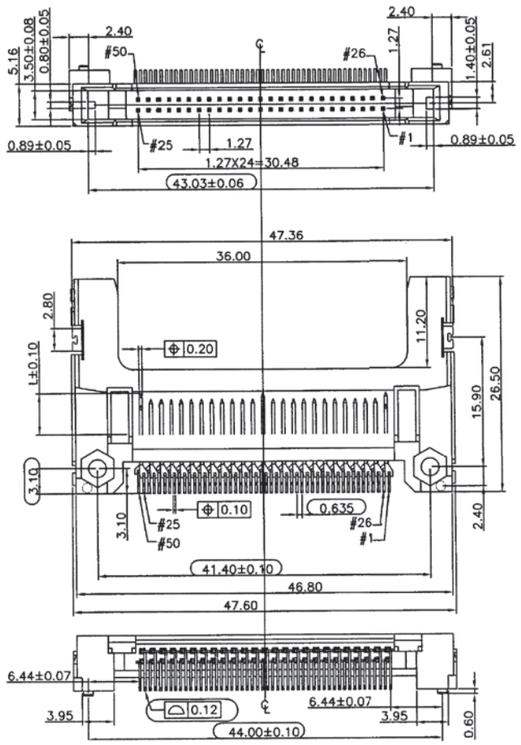

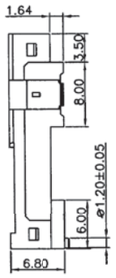

RECOMMENDED PCB LAYOUT AND MOUNTING AREA

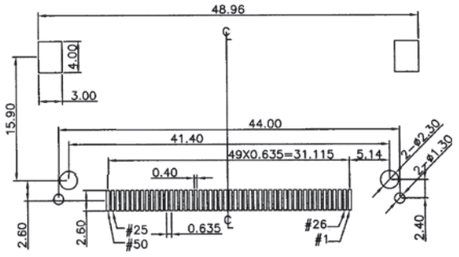

Downloaded from Arrow.com.

YAMAICHI ELECTRONICS

SERIES CF
COMPACT FLASH CARD CONNECTOR, TYPE I AND II (W. AND W/O EJECTOR)

SPECIFICATIONS

Insulation Resistance:	1000MΩ at 500V DC
Withstanding Voltage:	500Vrms
Current Rating:	0.5A
Operating Temp. Range:	-55°C to +85°C
Reflow Solder Temp.:	220°C min. / 60 sec, 260°C peak
Mating Cycles:	10,000 times

MATERIALS AND FINISH

Insulator:	LCP, glass filled (UL94V-0)
SMT Metal:	Brass, pure Sn
Push Button:	Glass reinforced PBT (UL94V-0)
Cover:	Stainless Steel
Contacts:	Brass
Plating:	Contacts - Gold (15μ") over Nickel (40μ") Solder Tails - pure Sn

PART NUMBER

CF 050 P2 - * 0 3 - * 0 - DS 3

- Series
- No. of Contacts
- Stand-off Height: 0 = without 1 = 2.20mm
- 0 = Top Mounted on PCB
- 3 = 90° SMT
- Ejector: 0 = Without 1 = Right Side
- Plating Area: Contacts: Gold (15μ") over 40μ" Nickel; Solder Tails: 100μ" Tin over 40μ" Nickel
- No Mark = Without Foil; 3 = Mylar Foil

FEATURES

- Adapter for Compact Flash Card Type I and II
- With push button ejector (optional
- RoHS2011/65/EU)

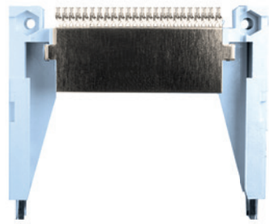

OUTLINE DIMENSIONS (NO STAND-OFF)

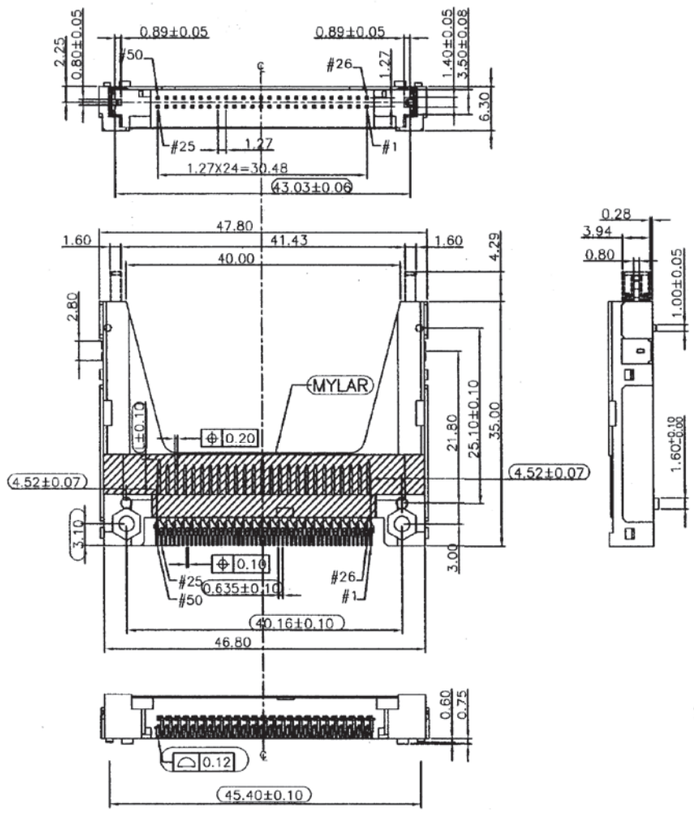

RECOMMENDED PCB LAYOUT

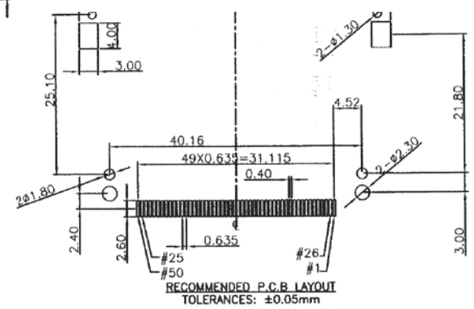

YAMAICHI ELECTRONICS

SERIES CF
COMPACT FLASH CARD CONNECTOR, TYPE I AND II (REVERSED TYPE)

SPECIFICATIONS

Insulation Resistance:	1000MΩ at 500V DC
Withstanding Voltage:	500Vrms
Current Rating:	1A AC/DC max.
Contact Resistance:	40mΩ max. at 20mV max.
Operating Temp. Range:	-55°C to +85°C
Reflow Solder Temp.:	220°C min. / 60 sec, 260°C peak
Mating Cycles:	10,000 times

MATERIALS AND FINISH

Insulator:	LCP, glass filled (UL94V-0)
SMT Metal:	Brass, pure Sn
Push Button:	Glass reinforced PBT (UL94V-0)
Cover:	Stainless Steel
Contacts:	Brass
Plating:	Contacts - Gold (15μ") over Nickel (40μ")
	Solder Tails - pure Sn

FEATURES

- Adapter for Compact Flash Card type I and II
- Reversed type, for assembly underneath the PCB
- RoHS2011/65/EU

PART NUMBER

CF 050 P2 - 0 1 3 - * 0 DS 3

- Series
- No. of Contacts
- Stand-off Height: 0 = without
- 1 = Bottom Mounted on PCB
- 3 = 90° SMT
- Ejector: 0 = Without 1 = Right Side
- Plating Area:
  Contacts: Gold (15μ") over 40μ" Nickel
  Solder Tails: 100μ" Tin over 40μ" Nickel
- No Mark = Without Foil
  3 = Mylar Foil

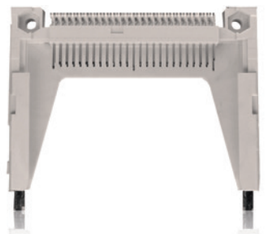

OUTLINE DIMENSIONS

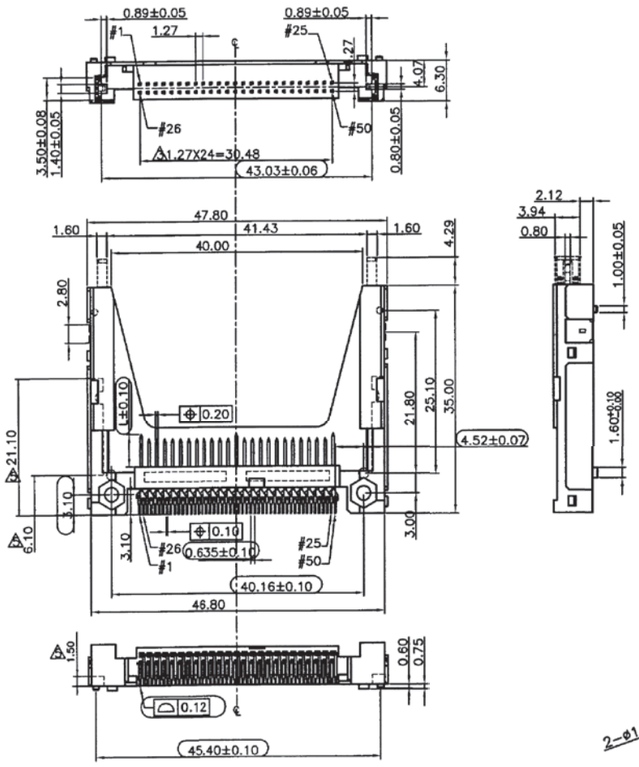

RECOMMENDED PCB LAYOUT

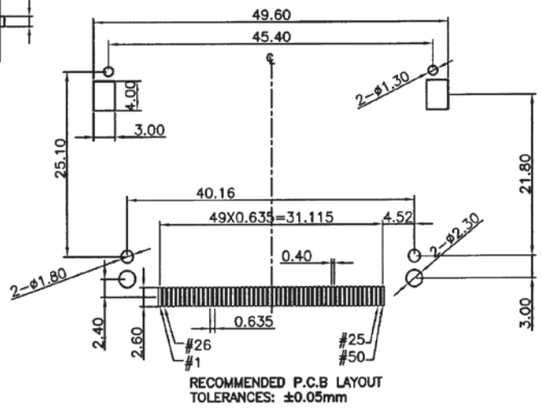

RECOMMENDED P.C.B LAYOUT
TOLERANCES: ±0.05mm

Downloaded from Arrow.com.

YAMAICHI ELECTRONICS

SERIES CF
COMPACT FLASH CARD CONNECTOR SLIM TYPE I (WITHOUT EJECTOR)

SPECIFICATIONS

Insulation Resistance:	1000MΩ at 500V DC
Withstanding Voltage:	500Vrms
Current Rating:	1A AC/DC max.
Contact Resistance:	40mΩ max. at 20mV max.
Operating Temp. Range:	-55°C to +85°C
Reflow Solder Temp.:	220°C min. / 60 sec., 260°C peak
Mating Cycles:	10,000 times

MATERIALS AND FINISH

Insulator:	LCP, glass filled (UL94V-0)
SMT Metal:	Brass, pure Sn
Contacts:	Brass
Plating:	Contacts - Gold (15μ") over Nickel (40μ")
	Solder Tails - pure Sn

FEATURES

- Adapter for Compact Flash Card type I and II
- Available for top and bottom PCB mounting
- Without cap for pick and place
- RoHS2011/65/EU

PART NUMBER

CF 050 P15 - 0 0 3 - 0 0 DS *

- Series
- No. of Contacts
- Stand-off Height: 0 = without
- 0 = Top Mounted on PCB
- 3 = 90° SMT
- Ejector: 0 = Without
- Fixing Method: 0 = SMT Fixing
- Plating Area:
  Contacts: Gold 15μ" over 40μ" Nickel
  Solder Tails: 100μ" Tin over 40μ" Nickel
- Lock Option: 0 = Without 1 = Nut Mounted

OUTLINE DIMENSIONS

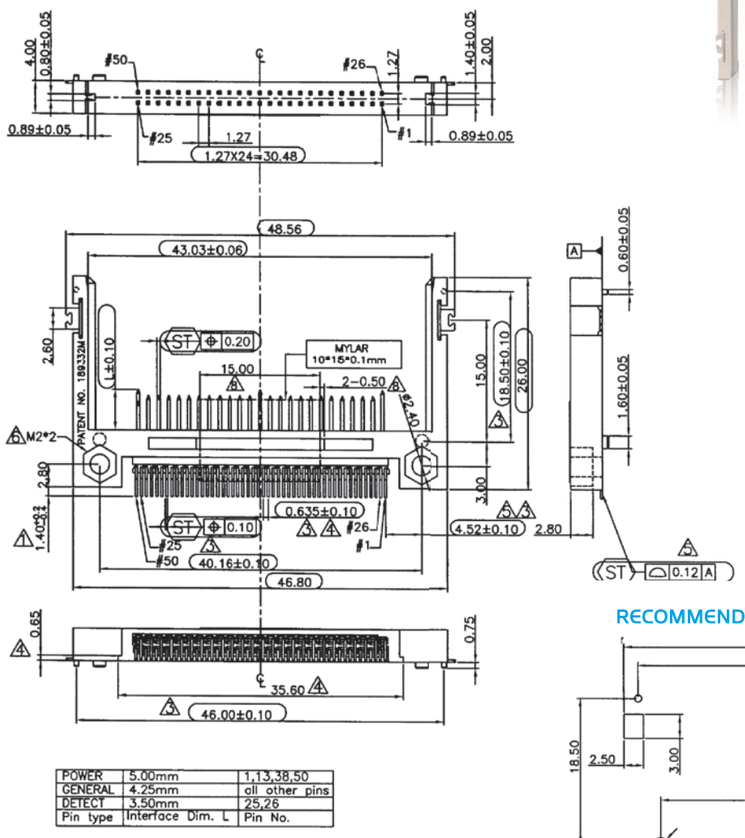

POWER	5.00mm	1,13,38,50
GENERAL	4.25mm	all other pins
DETECT	3.50mm	25,26
Pin type	Interface Dim. L	Pin No.

RECOMMENDED PCB LAYOUT

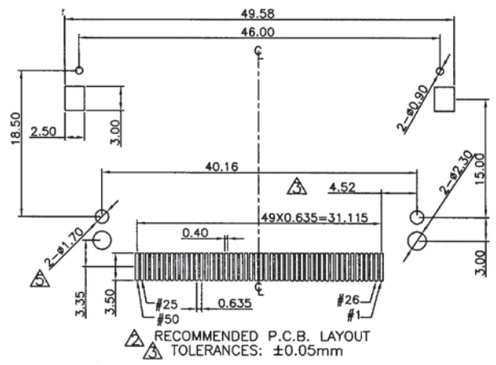

RECOMMENDED P.C.B. LAYOUT
TOLERANCES: ±0.05mm

YAMAICHI ELECTRONICS

SERIES CF
COMPACT FLASH CARD CONNECTOR, SLIM TYPE I (REVERSED TYPE)

SPECIFICATIONS

Insulation Resistance:	1000MΩ at 500V DC
Withstanding Voltage:	500Vrms
Current Rating:	1A AC/DC max.
Contact Resistance:	40mΩ max. at 20mV max.
Operating Temp. Range:	-55°C to +85°C
Reflow Solder Temp.:	220°C min. / 60 sec., 260°C peak
Mating Cycles:	10,000 times

MATERIALS AND FINISH

Insulator:	LCP, glass filled (UL94V-0)
SMT Metal:	Brass, pure Sn
Contacts:	Brass
Plating:	Contacts - Gold (15µ") over Nickel (40µ")
	Solder Tails - pure Sn

FEATURES

- Adapter for Compact Flash Card Type I
- Available for top and bottom PCB mounting
- Without cap for pick and place
- RoHS2011/65/EU

PART NUMBER

CF 050 P1S - 0 1 3 - 0 0 DS *

- Series
- No. of Contacts
- Stand-off Height: 0 = without
- 1 = Bottom Reversed on PCB
- 3 = 90° SMT
- Ejector: 0 = Without
- Fixing Method: 0 = SMT Fixing
- Plating Area:
  Contacts: Gold 15µ" over 40µ" Nickel
  Solder Tails: 100µ" Tin over 40µ" Nickel
- Lock Option: 0 = Without 1 = Nut Mounted

OUTLINE DIMENSIONS

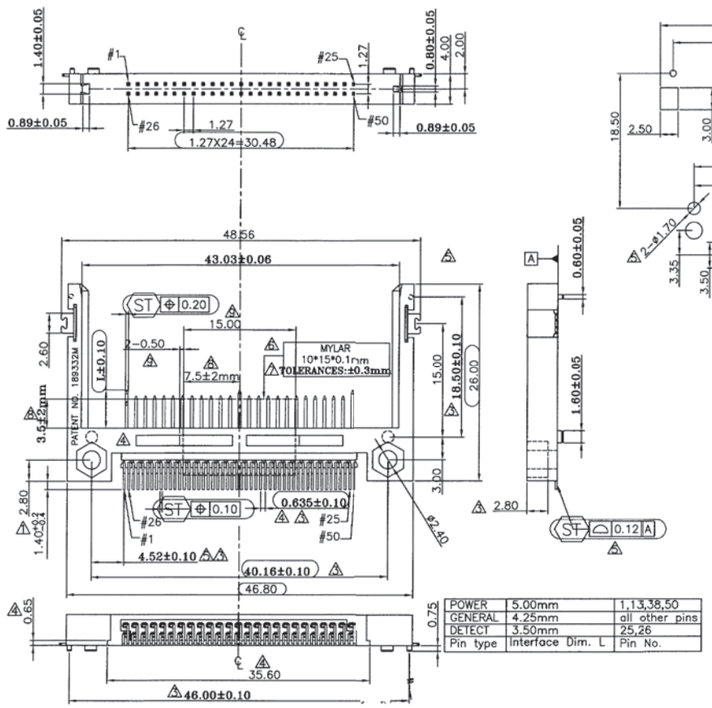

RECOMMENDED PCB LAYOUT

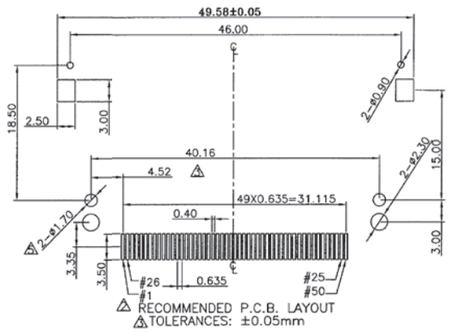

SPECIFICATIONS AND DRAWINGS ARE SUBJECT TO ALTERATION WITHOUT PRIOR NOTICE - DIMENSIONS IN MILLIMETER

Downloaded from Arrow.com.

YAMAICHI ELECTRONICS

SERIES CF
COMPACT FLASH CARD CONNECTOR, SLIM TYPE I AND II

SPECIFICATIONS

Insulation Resistance:	1000MΩ at 500V DC
Withstanding Voltage:	500Vrms
Current Rating:	1A AC/DC max.
Contact Resistance:	40mΩ max. at 20mV max.
Operating Temp. Range:	-55°C to +85°C
Reflow Solder Temp.:	220°C min. / 60 sec, 260°C peak
Mating Cycles:	10,000 times

MATERIALS AND FINISH

Insulator:	LCP, glass filled (UL94V-0)
Push Button:	Glass reinforced PBT (UL94V-0)
SMT Metal:	Brass, pure Sn
Pivot Shell:	Stainless Steel
Contacts:	Brass
Plating:	Contacts - Gold (15µ") over Nickel (40µ")
	Solder Tails - pure Sn

FEATURES

- Adapter for Compact Flash Card type I and II
- Available with various ejectors and stand-offs
- RoHS2011/65/EU

PART NUMBER

CF 050 P2S - * 0 3 - * 0 DS *

- Series
- No. of Contacts
- Stand-off Height 0 = Without 1 = 2.20mm
- PCB Mounting Type: 0 = Top
- 90° SMT
- Ejector: 0 = Without
  1 = Right Side (41.3mm)
  2 = Left Side (41.3mm)
  3 = Right Side (34.7mm)
  4 = Left Side (34.7mm)
- Fixing Method: 0 = SMT Fixing
- Plating Area:
  Contacts: Gold 15µ" over 40µ" Nickel
  Solder Tails: 100µ" Tin over 40µ" Nickel
- Lock Option: 0 = Without 1 = Nut Mounted

OUTLINE DIMENSIONS (NO STAND-OFF)

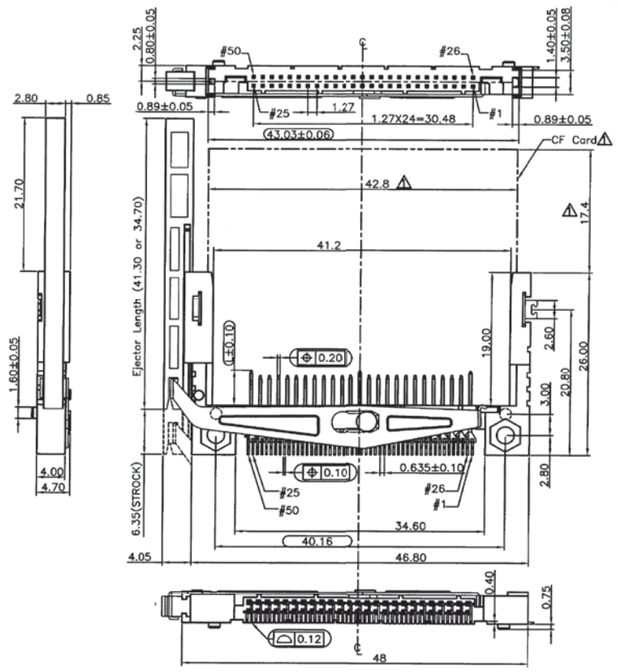

RECOMMENDED PCB LAYOUT

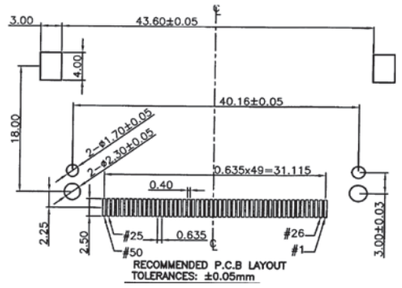

SPECIFICATIONS AND DRAWINGS ARE SUBJECT TO ALTERATION WITHOUT PRIOR NOTICE - DIMENSIONS IN MILLIMETER

SPECIFICATIONS

Insulation Resistance:	1000MΩ at 500V DC
Withstanding Voltage:	500Vrms
Current Rating:	1A AC/DC max.
Contact Resistance:	40mΩ max. at 20mV max.
Operating Temp. Range:	-55°C to +85°C
Reflow Solder Temp.:	220°C min. / 60 sec, 260°C peak
Mating Cycles:	10,000 times

MATERIALS AND FINISH

Insulator:	LCP, glass filled (UL94V-0)
Push Button:	Glass reinforced PBT (UL94V-0)
SMT Metal:	Brass, pure Sn
Pivot Shell:	Stainless Steel
Contacts:	Brass
Plating:	Contacts - Gold (15μ") over Nickel (40μ")
	Solder Tails - pure Sn

FEATURES

- Reverse type without stand-off height is not applicable to Compact Flash Card Type II
- Adapter for Compact Flash Card type I and II
- Available with various ejectors
- RoHS2011/65/EU

PART NUMBER

CF 050 P2S - * 1 3 - * 0 DS *

- Series
- No. of Contacts
- Stand-off Height 0 = Without 1 = 2.20mm
- PCB Mounting Type: 1 = Bottom Reverse
- 90° SMT
- Ejector: 0 = Without
  1 = Right Side (41.3mm)
  2 = Left Side (41.3mm)
  3 = Right Side (34.7mm)
  4 = Left Side (34.7mm)
- Fixing Method: 0 = SMT Fixing
- Plating Area:
  Contacts: Gold 15μ" over 40μ" Nickel
  Solder Tails: 100μ" Tin over 40μ" Nickel
- Lock Option: 0 = Without 1 = Nut Mounted

OUTLINE DIMENSIONS (STAND-OFF HEIGHT 2.20MM)

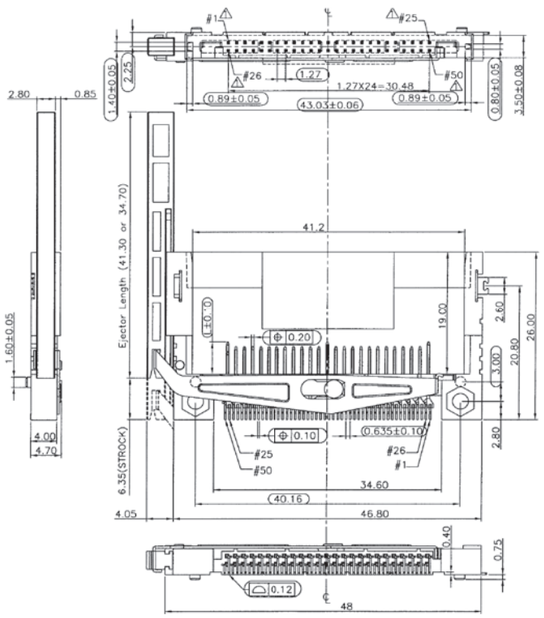

RECOMMENDED PCB LAYOUT

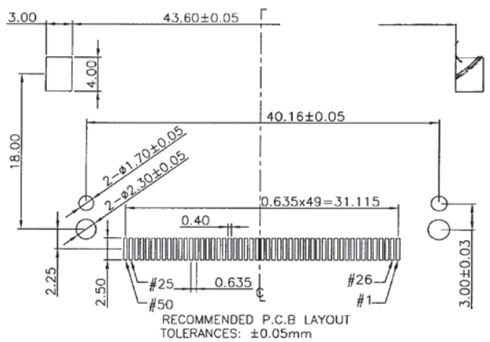

Downloaded from Arrow.com.

FEATURES

- Locking bow secure the Compact Flash card in the connector
- Locking bow must be used in combination with CF050P2-*03-00-DS connectors
- Locking bow is attached after the CF card is inserted into the connector
- RoHS2011/65/EU

PART NUMBER

CF 050P2-LT REV3.0

- Series
- Design No.

OUTLINE DIMENSIONS

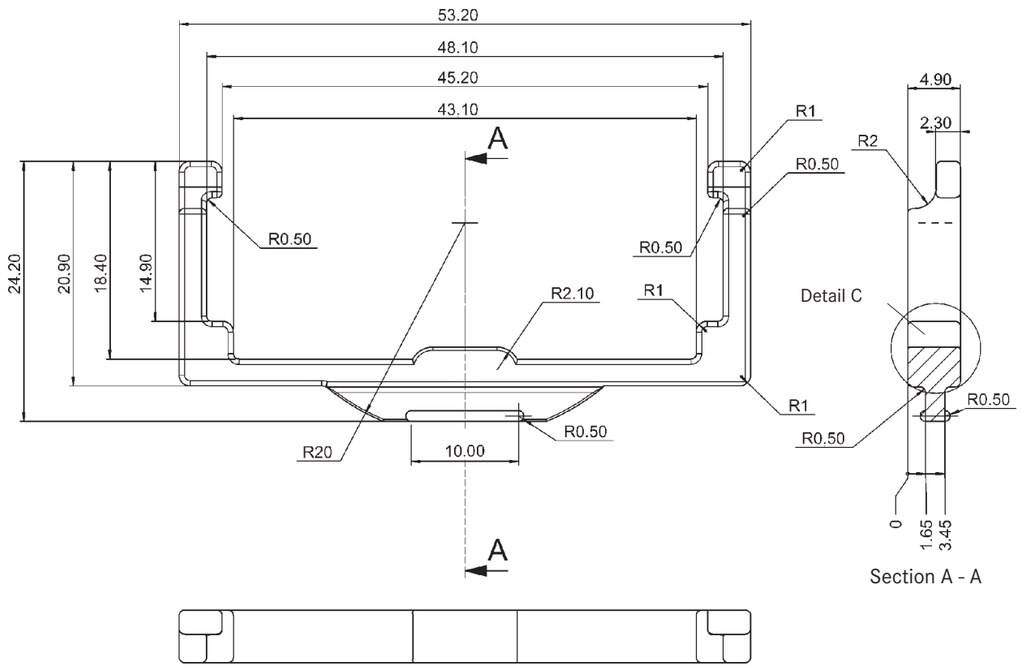

DETAIL C

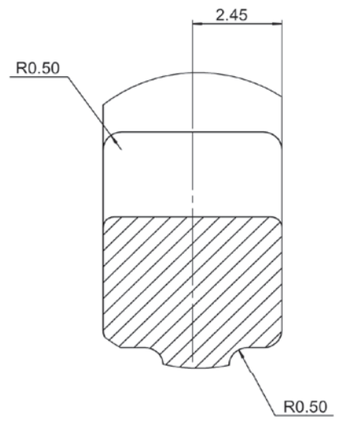

YAMAICHI ELECTRONICS

EUROPEAN DISRIBUTOR

AUSTRIA / EASTERN EUROPE
CODICO GmbH & Co. KG
Zwingenstrasse 6 - 8
2380 Perchtoldsdorf
Austria

Contact: Mr. Christian Sichtar

Tel.: +43 186 305 0
Fax: +43 186 305 5000
e-mail: office@codico.com
Internet: www.codico.com

BENELUX
Logic Technology B.V.
John F. Kennedylaan 18
5981 XC Panningen
The Netherlands

Contact: Mr. René Janssen or
Mr. André de Ceuninck

Tel.: +31 77 307 8438
Fax: +31 77 307 8439
e-mail: info@logic.nl
Internet: www.logic.nl/yamaichi

DENMARK
Cabcon A/S
Stamholmen 193 A
2650 Hvidovre,
Denmark

Contact: Mr. Brian Dehlsen or
Mr. Flemming Schandorph

Tel. +45 38 76 03 15
Fax. +45 38 76 03 20
e-mail: fs@cabcon.dk
internet: www.cabcon.dk

FINLAND
Yleiselektroniikka OY
Po Box 73
Luomannotko 6
02201 Espoo
Finland

Contact: Mr. Kai Nurmenniemi

Tel.: +358 10 2891 200
Fax: +358 10 2891 270
e-mail: kai.nurmenniemi@yeint.fi
Internet: www.yeint.fi

FRANCE
Manudax - France
ZA les Petites Haies
28, rue de Valenton
BP302
94709 Maisons-Alfort Cedex
France

Contact: Mr. Philippe Matoulet or
Mr. Christophe Lazerges

Tel.: +33 1 41 789444
Fax: +33 1 48 994186
e-mail: manudax@manudax.fr
Internet: www.manudax.fr

GERMANY
GLYN GmbH & Co. KG
Am Wörtzgarten 8
65510 Idstein / Taunus
Germany

Contact: Mr. Heiko Keller

Tel.: +49 (0)6126 590342
Fax: +49 (0)6126 590132
e-mail: heiko.keller@glyn.de
Internet: www.glyn.de

ISRAEL
Teder Electro Mechanical Engineering
14 Atir Yeda st.
Kfar-Saba 4464323
Israel

Contact: Mr. Gadi Feit

Tel.: +972 73 2331200
Fax: +972 73 2331233
e-mail sales@teder.com
Internet: www.teder.com

RUSSIA
YE International
Obukhovskoy Oborony, 70, bld. 3A
St. Petersburg, 192029
Russia

Contact: Mr. Alexander Muraviev

Tel. +7 812 313 34 40 ext.613
Fax. +7 812 313 34 41
e-Mail: alexander.muraviev@yeint.ru
Internet: www.yeint.ru

SWEDEN
Nanomil AB
Vendevägen 90
SE-182 32 Danderyd
Sweden

Contact: Mr. Christian Rassmuson

Tel. +46 8 684 051 42
Fax. +46 739 013 742
e-Mail: christian@nanomil.se
Internet: www.nanomil.se

NORWAY
Link Nordic AS
Gramveien 76
NO - 1801 Askim
Norway

Contact: Mr. Yngve Mobråthen

Tel.: +47 69 88 98 99
Fax: +47 48 1520 71
e-mail: yngve.mobrathen@linknordic.com
Internet: www.linknordic.com

SWITZERLAND
Sicovend AG
Alte Poststrasse 1
8310 Kemptthal
Switzerland

Contact: Mr. Othmar Stocker

Tel.: +41 52 354 80 24
Fax: +41 52 354 80 00
e-mail: othmar.stocker@sicovend.ch
Internet: www.sicovend.ch

UNITED KINGDOM
Cyntech Components Ltd.
Unit 29, Chancerygate Business Park
Goulds Close, Denbigh West,
Milton Keynes MK1 1EQ
UK

Contact: Mr. Ian Mort

Tel.: +44 (0)1908 37 39 27
Fax: +44 (0)1908 36 53 05
e-mail: sales@cyntech.co.uk
Internet: www.cyntech.co.uk

SPECIFICATIONS AND DRAWINGS ARE SUBJECT TO ALTERATION WITHOUT PRIOR NOTICE - DIMENSIONS IN MILLIMETER

Downloaded from Arrow.com.

YAMAICHI ELECTRONICS

C

CF024-S9-BL-*-*-TRAY 47
CF050P1S-003-00DS* 47
CF050P1S-013-00DS* 52
CF050P2 -*03-*0-DS3 49
CF050P2-013-*0DS3 50
CF050P2S-*1 3-*0DS* 54
CF050P2S-*03-*0DS* 53
CF050P15 0130 0DS* 48
CF050P2-LT Rev3.0 55
CNT-S-**-**-*(TH Single Deck) 60

F

FMA006-3700-0 40
FMA006-3800-0 41
FMS006-3810-0 39
FMS006-2610-0 33
FMS006-2620-0 34
FMS006-3710-0 38
FMS006-3810-0 39
FMS006-5100-0 35
FMS008-6001-0 40
FPS009-2305-0 12
FPS009-2409-0 10
FPS009-2901-0 6
FPS009-2903-0-VE 8
FPS009-2920-0 16
FPS009-2960-0 14
FPS009-2970-0 18
FPS009-3001-BL 20
FPS009-3002-BL 20
FPS009-3003-BL 20
FPS009-3202-BL 22
FPS009-4200-0 (03) 23
PS017T-1000-FL-TRAY 25
FPS017T-2000-FL-TRAY 24
FRS016T-2000-0V3 46
FUA006-3210-0 45
FUA006-3220-0 45
FUS006-3210-0 45
FUS006-8500-0 44

P

PCMCIA-1088-* 62
PCMCIA-1260-* 60
PJS008-2003-1 29
PJS008-2004-0-VE 28
PJS008-2005-*-VE 30
PJS008-2120-0 27
PJS008-2130-0 31
PJS008-2130-1 26
PJS008T-0000-0 33
PJS008U-3000-0 32

SPECIFICATIONS

Insulation Resistance:	1,000MΩ min. at 500V DC
Withstanding Voltage:	500V ACrms for 1 minute
Contact Resistance:	100mΩ at 1mA / 20mV max.
Voltage Rating:	5V DC
Current Rating:	0.5A
Operating Temp. Range:	-40°C to +85°C
Mating Cycles:	3,000 (office environment)

PART NUMBER

FPS 009 - 2913 - 0

- Series No.
- Number of Contacts
- Design No.

MATERIALS AND FINISH

Insulator:	LCP
Shielding plate:	Stainless
Contact:	Copper Alloy
Contact area:	Ni-Au
Solder tail:	Ni-Sn

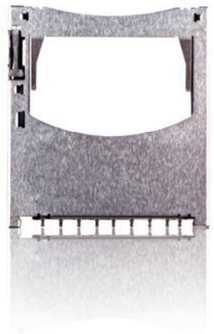

FEATURES

- Surface mount type
- 1,80mm stand off type
- EMI prevention design with 4 GND soldering terminal
- Soft lock mechanism for SD card
- top mount, push lock push eject type (eject stroke: 4,50mm)
- RoHS2011/65/EU

OUTLINE DIMENSIONS

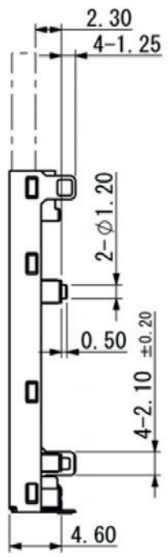

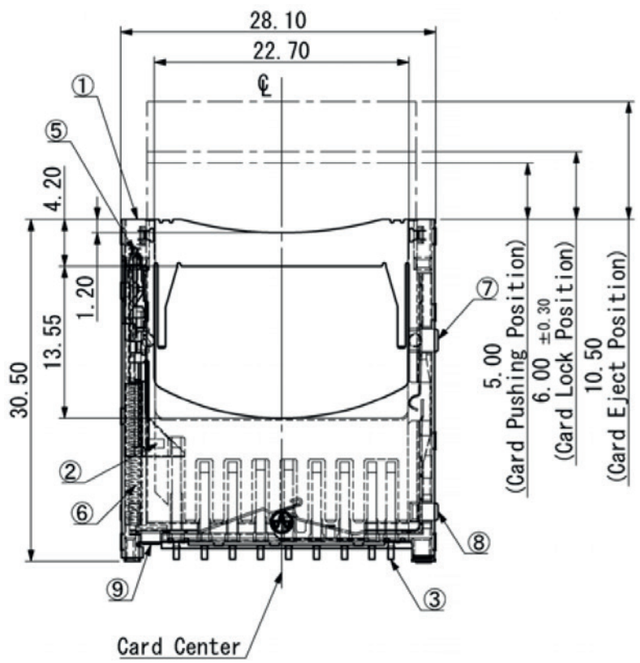

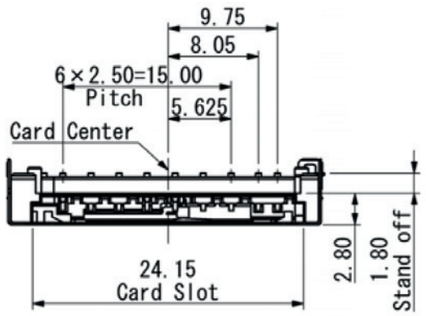

Downloaded from Arrow.com.

The technical data and specifications of the products shown in this catalogue are for reference only, and apply to products available at the time of catalogue printing in Sept. 2019. Product modification often involves changes to technical data and size, and it is therefore recommended that the buyer request the latest technical data and specifications before placing a purchasing contract.

Future updates to this printed catalogue can be found at
https://www.yamaichi.de/downloads/product-catalogues.html

Technische Daten und Maßangaben der im Katalog aufgeführten Produkte beziehen sich auf Referenzprodukte aus dem Produktsortiment bei Erscheinen des Katalogs im Sept. 2019. Produktänderungen, insbesondere aufgrund technischer Weiterentwicklung, bedingen regelmäßig veränderte technische Daten und Maße. Dem Besteller wird daher dringend empfohlen, vor Vertragsabschluss technische Daten und Maßangaben gesondert nachzufragen.

Zukünftige Updates dieses gedruckten Katalogs finden Sie auf
https://www.yamaichi.de/de/downloads/produktkataloge.html

CARD CONNECTORS

Version November 2018

TECHNICAL DATA ARE SUBJECT TO ALTERATION WITHOUT PRIOR NOTICE

YAMAICHI ELECTRONICS
Deutschland GmbH
Concor Park
Bahnhofstraße 20
85609 Aschheim-Dornach
Germany

Phone +49 (0)89 45109-0
Fax +49 (0)89 45109-110
E-Mail sales@yamaichi.de
Web www.yamaichi.de

YAMAICHI ELECTRONICS
Italia s.r.l.
Centro Direzionale Colleoni
Via Colleoni, 1
Palazzo Taurus Ing. 1
20864 Agrate Brianza (MB)
Italy

Phone +39 039 6881-185
Fax +39 039 6892-150
E-Mail sales@yamaichi.it
Web www.yamaichi.it

YAMAICHI ELECTRONICS
GB Ltd.
6 The Clockhouse
Stratton Park
Micheldever
Hampshire SO21 3DP
Great Britain

Phone +44 (0)7808 493377
Fax +44 (0)1962 774902
E-Mail sales@yamaichi.co.uk
Web www.yamaichi.co.uk

Downloaded from Arrow.com.