PT 1,5/15-5,0-H - PCB terminal block

1935297

https://www.phoenixcontact.com/us/products/1935297

Please be informed that the data shown in this PDF document is generated from our online catalog. Please find the complete data in the user documentation. Our general terms of use for downloads are valid.

PCB terminal block, nominal current: 17.5 A, rated voltage (III/2): 400 V, nominal cross section: 1.5 mm^2, number of potentials: 15, number of rows: 1, number of positions per row: 15, product range: PT 1,5/..-H, pitch: 5 mm, connection method: Screw connection with wire protector, mounting: Wave soldering, conductor/PCB connection direction: 0 °, color: green, Pin layout: Linear pinning, Solder pin [P]: 3.5 mm, number of solder pins per potential: 1, type of packaging: packed in cardboard

Your advantages

- Well-known connection principle allows worldwide use
- Low temperature rise, thanks to maximum contact force
- High terminal block capacity thanks to rectangular terminal block space
- Allows connection of two conductors
- The latching on the side enables various numbers of positions to be combined

Commercial data

Item number	1935297
Packing unit	50 pc
Minimum order quantity	50 pc
Note	Made to order (non-returnable)
Sales key	AA12
Product key	AALFMB
Catalog page	Page 421 (C-1-2013)
GTIN	4017918917067
Weight per piece (including packing)	15.6 g
Weight per piece (excluding packing)	14.4 g
Customs tariff number	85369010
Country of origin	CN

Downloaded from Arrow.com.

Technical data

Product properties

Product type	Printed circuit board terminal
Product family	PT 1,5/..-H
Product line	COMBICON Terminals S
Type	PC termination block
Number of positions	15
Pitch	5 mm
Number of connections	15
Number of rows	1
Number of potentials	15
Pin layout	Linear pinning
Solder pins per potential	1

Data management status

Article revision	05

Electrical properties

Nominal current I_N	17.5 A
Nominal voltage U_N	400 V
Rated voltage (III/3)	250 V
Rated surge voltage (III/3)	4 kV
Rated voltage (III/2)	400 V
Rated surge voltage (III/2)	4 kV
Rated voltage (II/2)	630 V
Rated surge voltage (II/2)	4 kV

Connection data

Connection technology

Type	PC termination block
Nominal cross section	1.5 mm²

Conductor connection

Connection method	Screw connection with wire protector
Conductor cross section rigid	0.2 mm² ... 2.5 mm²
Conductor cross section flexible	0.2 mm² ... 2.5 mm²
Conductor cross section AWG	26 ... 14
Conductor cross section flexible, with ferrule without plastic sleeve	0.25 mm² ... 1.5 mm²
Conductor cross section, flexible, with ferrule, with plastic sleeve	0.25 mm² ... 1.5 mm²
2 conductors with same cross section, solid	0.2 mm² ... 0.75 mm²
2 conductors with same cross section, flexible	0.2 mm² ... 0.75 mm²
2 conductors with same cross section, flexible, with ferrule	0.25 mm² ... 0.34 mm²

Downloaded from Arrow.com.

without plastic sleeve	
2 conductors with the same cross section, flexible, with TWIN ferrule with plastic sleeve	0.5 mm² ... 0.75 mm²
Stripping length	5 mm
Tightening torque	0.35 Nm ... 0.4 Nm

Mounting

Mounting type	Wave soldering
Pin layout	Linear pinning

Material specifications

Material data - contact

Note	WEEE/RoHS-compliant, free of whiskers according to IEC 60068-2-82/JEDEC JESD 201
Contact material	Cu alloy
Surface characteristics	Tin-plated
Metal surface terminal point (top layer)	Tin (3 - 12 µm Sn)
Metal surface terminal point (middle layer)	Nickel (1.5 - 4 µm Ni)
Metal surface soldering area (top layer)	Tin (3 - 12 µm Sn)
Metal surface soldering area (middle layer)	Nickel (1.5 - 4 µm Ni)

Material data - housing

Color (Housing)	green (6021)
Insulating material	PA
Insulating material group	I
CTI according to IEC 60112	600
Flammability rating according to UL 94	V0
Glow wire flammability index GWFI according to EN 60695-2-12	850
Glow wire ignition temperature GWIT according to EN 60695-2-13	775
Temperature for the ball pressure test according to EN 60695-10-2	125 °C

Notes

Note on application	For safe conductor connection, always adhere to a defined tightening torque. Particularly in the case of PCB terminal blocks with two or three positions, the individual solder pin for each contact point cannot compensate for this. That is why the terminal blocks must be supported during conductor connection (held with one hand, support on the housing).
Note on application	When using ferrules and taking the specified stripping length into consideration, 250 V is only achieved in conjunction with overvoltage category/pollution degree II/2.

Dimensions

Downloaded from Arrow.com.

Dimensional drawing	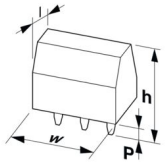
Pitch	5 mm
Width [w]	75 mm
Height [h]	14.8 mm
Length [l]	9 mm
Installed height	11.3 mm
Solder pin length [P]	3.5 mm
Pin dimensions	ø 1 mm

PCB design

Pin spacing	5 mm
Hole diameter	1.3 mm

Mechanical tests

Test for conductor damage and slackening

Specification	IEC 60999-1:1999-11
Result	Test passed

Pull-out test

Specification	IEC 60999-1:1999-11
Conductor cross section/conductor type/tractive force setpoint/actual value	0.2 mm² / flexible / > 10 N
	0.2 mm² / solid / > 10 N
	2.5 mm² / flexible / > 50 N
	2.5 mm² / solid / > 50 N

Electrical tests

Temperature-rise test

Specification	IEC 60947-7-4:2013-08
Requirement temperature-rise test	The sum of ambient temperature and temperature rise of the PCB terminal block shall not exceed the upper limiting temperature.

Short-time withstand current

Specification	IEC 60947-7-4:2013-08

Insulation resistance

Specification	IEC 60512-3-1:2002-02
Insulation resistance, neighboring positions	> 5 MΩ

Air clearances and creepage distances |

Specification	IEC 60947-1:2007-06 + A1:2010-12 + A2:2014-09

Downloaded from Arrow.com.

Insulating material group	I
Comparative tracking index (IEC 60112)	CTI 600
Rated insulation voltage (III/3)	250 V
Rated surge voltage (III/3)	4 kV
minimum clearance value - non-homogenous field (III/3)	3 mm
minimum creepage distance (III/3)	3.2 mm
Note on connection cross section	With connected conductor 2.5 mm² (solid).
Rated insulation voltage (III/2)	400 V
Rated surge voltage (III/2)	4 kV
minimum clearance value - non-homogenous field (III/2)	3 mm
minimum creepage distance (III/2)	3 mm
Rated insulation voltage (II/2)	630 V
Rated surge voltage (II/2)	4 kV
minimum clearance value - non-homogenous field (II/2)	3 mm
minimum creepage distance (II/2)	3.2 mm

Environmental and real-life conditions

Vibration test

Specification	IEC 60068-2-6:2007-12
Frequency	10 - 150 - 10 Hz
Sweep speed	1 octave/min
Amplitude	0.35 mm (10 Hz ... 60.1 Hz)
Acceleration	5g (60.1 Hz ... 150 Hz)
Test duration per axis	2.5 h
Test directions	X-, Y- and Z-axis

Glow-wire test

Specification	IEC 60695-2-10:2013-04
Temperature	850 °C
Time of exposure	5 s

Aging

Specification	IEC 60947-7-4:2013-08

Ambient conditions

Ambient temperature (operation)	-40 °C ... 100 °C (Depending on the current carrying capacity/derating curve)
Ambient temperature (storage/transport)	-40 °C ... 70 °C
Relative humidity (storage/transport)	30 % ... 70 %
Ambient temperature (assembly)	-5 °C ... 100 °C

Packaging specifications

Type of packaging	packed in cardboard

Downloaded from Arrow.com.

Drawings

Drilling plan/solder pad geometry

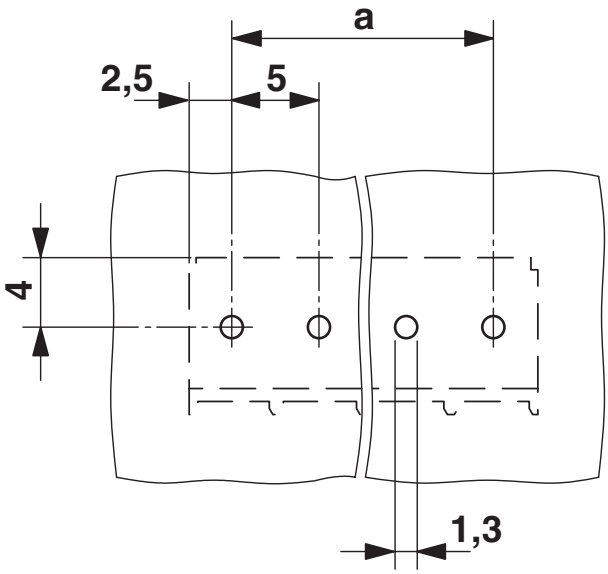

Dimensional drawing

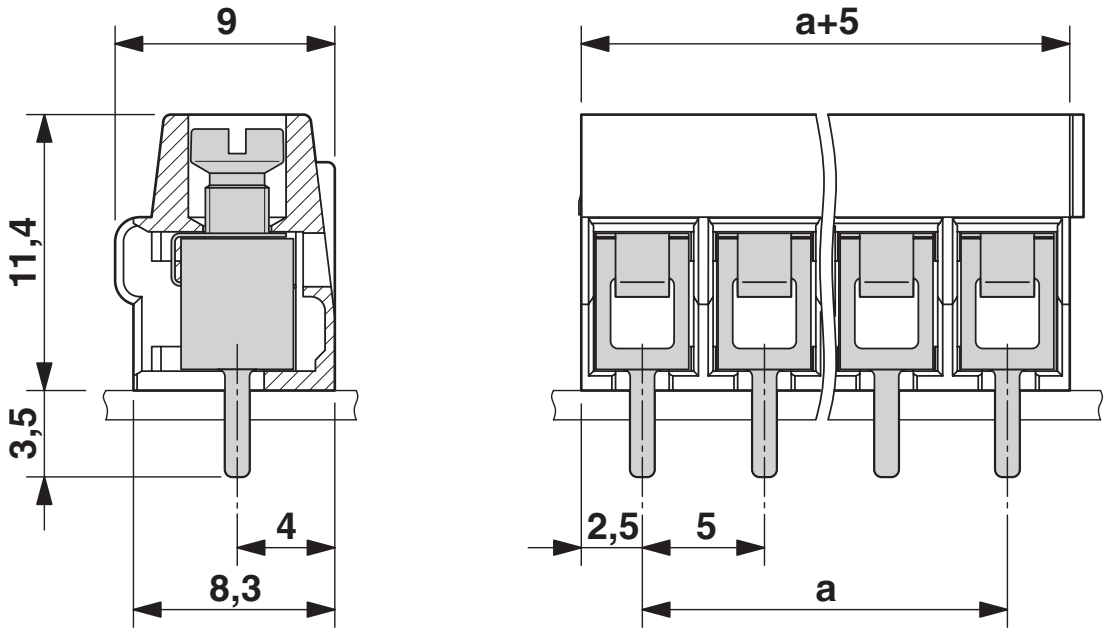

Downloaded from Arrow.com.

Diagram

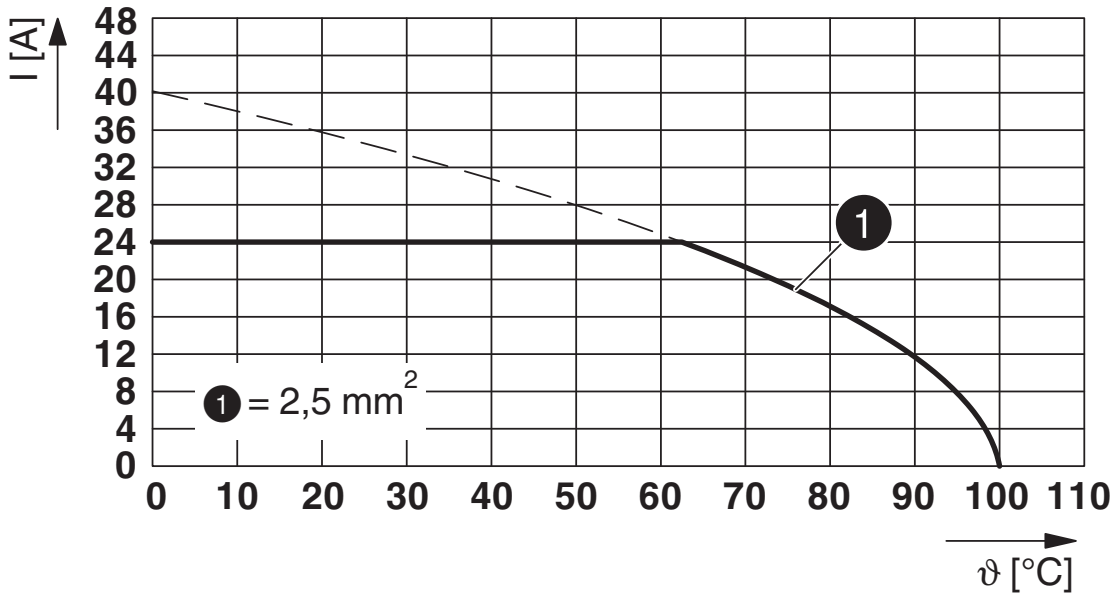

Type: PT 1,5/...-5,0-H (S)

Diagram

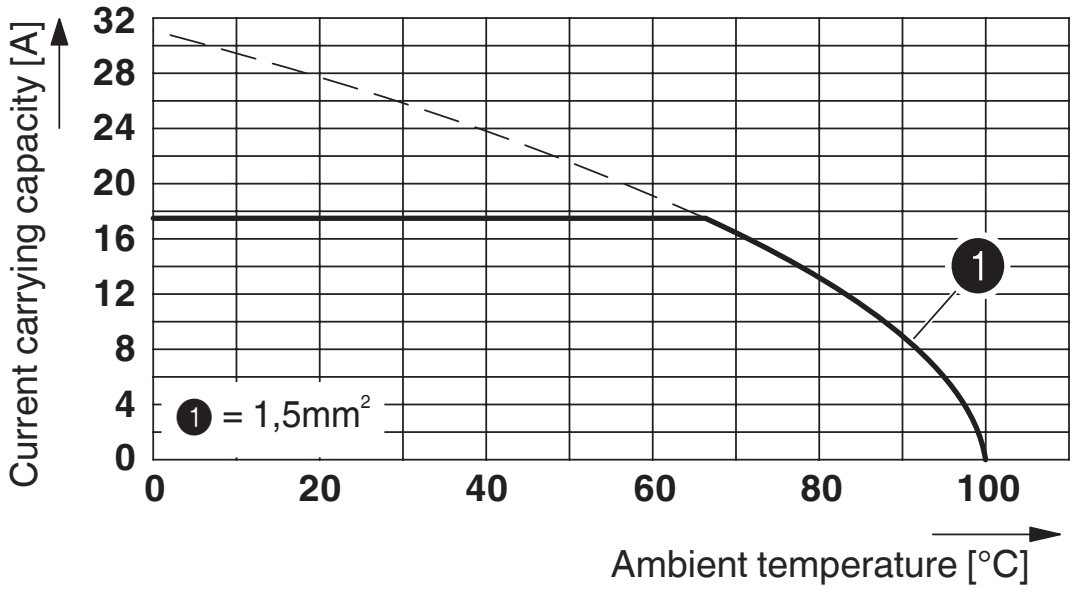

Type: PT 1,5/...-5,0-H

Downloaded from Arrow.com.

Approvals

To download certificates, visit the product detail page: https://www.phoenixcontact.com/us/products/1935297

cULus Recognized
Approval ID: E60425-20030211

	Nominal voltage U_N	Nominal current I_N	Cross section AWG	Cross section mm^2
Use group B				
	300 V	18 A	26 - 12	-
Use group D				
	300 V	10 A	26 - 12	-

VDE Gutachten mit Fertigungsüberwachung
Approval ID: 40031691

	Nominal voltage U_N	Nominal current I_N	Cross section AWG	Cross section mm^2
	250 V	24 A	-	0.2 - 2.5

VDE Zeichengenehmigung
Approval ID: 40055523

	Nominal voltage U_N	Nominal current I_N	Cross section AWG	Cross section mm^2
	400 V	17.5 A	-	0.2 - 1.5

Downloaded from Arrow.com.

Classifications

ECLASS

ECLASS-11.0	27460101
ECLASS-12.0	27460101
ECLASS-13.0	27460101

ETIM

ETIM 9.0	EC002643

UNSPSC

UNSPSC 21.0	39121400

Downloaded from Arrow.com.

Environmental product compliance

EU RoHS

Fulfills EU RoHS substance requirements	Yes
Exemption	6(c)

China RoHS

Environment friendly use period (EFUP)	EFUP-50
	An article-related China RoHS declaration table can be found in the download area for the respective article under "Manufacturer declaration". For all articles with EFUP-E, no China RoHS declaration table issued and required.

EU REACH SVHC

REACH candidate substance (CAS No.)	Lead(CAS: 7439-92-1)
SCIP	9e6cf21e-99d3-4713-bec7-c7bbc1471442

Downloaded from Arrow.com.

Accessories

SZS 0,6X3,5 - Screwdriver

1205053

https://www.phoenixcontact.com/us/products/1205053

Actuation tool, for ST terminal blocks, insulated, also suitable for use as a bladed screwdriver, size: 0.6 x 3.5 x 100 mm, 2-component grip, with non-slip grip

SK 5/3,8:FORTL.ZAHLEN - Marker card

0804183

https://www.phoenixcontact.com/us/products/0804183

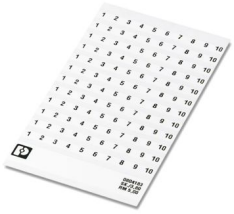

Marker card, white, labeled, horizontal: consecutive numbers 1 ... 10, 11 ... 20, etc. up to 91 ... (99)100, mounting type: adhesive, for terminal block width: 5 mm, lettering field size: 5 x 3.8 mm

Downloaded from Arrow.com.

CRIMPFOX CENTRUS 6S - Crimping pliers

1213144

https://www.phoenixcontact.com/us/products/1213144

Crimping pliers, for uninsulated and insulated ferrules, DIN 46228 Part 1 and 4, from 0.14 mm^2 … 6 mm^2, also for TWIN ferrules up to 2 x 4 mm^2, automatic cross section adjustment, lateral insertion, equipped with fall protection

CRIMPFOX 6 - Crimping pliers

1212034

https://www.phoenixcontact.com/us/products/1212034

Crimping pliers, for ferrules without insulating collar according to DIN 46228 Part 1 and ferrules with insulating collar according to DIN 46228 Part 4, 0.25 mm^2 ... 6.0 mm^2, lateral entry, trapezoidal crimp

Phoenix Contact 2024 © - all rights reserved
https://www.phoenixcontact.com

Phoenix Contact USA
586 Fulling Mill Road
Middletown, PA 17057, United States
(+717) 944-1300
info@phoenixcon.com

Downloaded from Arrow.com.