SERIES: PSK-3D | **DESCRIPTION:** INTERNAL AC-DC POWER SUPPLY

FEATURES

- wide input range (85 ~ 305 Vac)
- wide operating temperature range (-40 to +85 C)
- Class B emissions
- certified to 62368, 61558, and 60335 safety standards
- over voltage, over current, short circuit protections
- compact 1 x 1 inch encapsulated package

MODEL	output voltage (Vdc)	output current max (A)	output power max (W)	ripple and noise[1] max (mVp-p)	efficiency[2] typ (%)
PSK-3D-3	3.3	0.9	3	100	72
PSK-3D-5	5	0.6	3	100	76
PSK-3D-9	9	0.333	3	100	78
PSK-3D-12	12	0.25	3	100	78
PSK-3D-15	15	0.2	3	100	79
PSK-3D-24	24	0.125	3	100	79

Notes: 1. Ripple & noise are measured at 20 MHz BW with 10 μF aluminum electrolytic capacitor and 1 μF ceramic capacitor on the output. See application circuit.
2. Measured at 230 Vac.
3. All specifications are measured at Ta=25°C, humidity <75%, nominal input voltage, and rated output load unless otherwise specified.

PART NUMBER KEY

PSK - 3D - XX - X

- PSK - 3D: Base Number
- XX: Output Voltage
- X: Mounting Style:
  blank = board mount
  T = chassis mount
  DIN = DIN-rail mount

Please read our datasheet & drawing disclaimer here.

Downloaded from Arrow.com.

INPUT

parameter	conditions/description	min	typ	max	units
voltage	ac input dc input	85 100		305 430	Vac Vdc
frequency		47		63	Hz
current	at 115 Vac at 230 Vac			0.08 0.06	A A
inrush current	at 115 Vac at 230 Vac		15 25		A A
leakage current	277 Vac/50 Hz			0.25	mA

OUTPUT

parameter	conditions/description	min	typ	max	units
capacitive load	3.3 Vdc output model 5 Vdc output model 9 Vdc output model 12 Vdc output model 15 Vdc output model 24 Vdc output model			4,000 3,000 1,200 1,200 680 220	µF µF µF µF µF µF
output voltage accuracy	3.3 Vdc output model all other output models		±3 ±2		% %
line regulation	at full load		±0.5		%
load regulation	0~100% load		±1.0		%
hold-up time	at 115 Vac at 230 Vac		5 50		ms ms
switching frequency			65		kHz
no load power consumption	at 230 Vac 5 Vdc & 12 Vdc output models all other output models		0.2 0.1		W W

PROTECTIONS

parameter	conditions/description	min	typ	max	units
over voltage protection	3.3 & 5 Vdc output models 9 Vdc output model 12 Vdc output model 15 Vdc output model 24 Vdc output model			7.5 15 16 20 30	V V V V V
over current protection	auto recovery			200	%
short circuit protection	continuous, auto recovery, hiccup				

SAFETY & COMPLIANCE

parameter	conditions/description	min	typ	max	units
isolation voltage	input to output, 1 min. <5mA	4,000			Vac
safety approvals	certified to 62368: IEC, EN, UL/cUL certified to 61558: EN certified to 60335: EN				
safety class	Class II				
EMI/EMC	CISPR32/EN55032 CLASS B EN55014-1				
ESD	IEC/EN 61000-4-2 Contact ±6KV/Air ±8KV perf. Criteria B EN55014-2 perf. Criteria B				
radiated immunity	IEC/EN61000-4-3 10V/m perf. Criteria A EN55014-2 perf. Criteria A				

Downloaded from Arrow.com.

SAFETY & COMPLIANCE

EFT/burst	IEC/EN61000-4-4 ±2KV (See Fig.1 for typical application circuit) perf. Criteria B IEC/EN61000-4-4 ±4KV (See Fig.2 for recommended circuit) perf. Criteria B EN55014-2 perf. Criteria B		
surge	IEC/EN61000-4-5 line to line ±1KV (See Fig.1 for typical application circuit) perf. Criteria B IEC/EN61000-4-5 line to line ±2KV (See Fig.2 for recommended circuit) perf. Criteria B EN55014-2 perf. Criteria B		
conducted immunity	IEC/EN61000-4-6 10Vr.m.s perf. Criteria A EN55014-2 perf. Criteria A		
voltage dips and interruption	IEC/EN61000-4-11 0%, 70% perf. Criteria B EN55014-2 perf. Criteria B		
MTBF	MIL-HDBK-217F at 25°C	2,799,000	hours
RoHS	yes		

ENVIRONMENTAL

parameter	conditions/description	min	typ	max	units
operating temperature		-40		85	°C
storage temperature		-40		105	°C
storage humidity		0		95	%

SOLDERABILITY

parameter	conditions/description	min	typ	max	units
wave soldering	5~10 seconds max	255	260	265	°C
hand soldering	3~5 seconds max	350	360	370	°C

MECHANICAL

parameter	conditions/description	min	typ	max	units
dimensions	horizontal package: 25.40 x 25.40 x 17.60 chassis mount: 76.00 x 31.50 x 26.40 DIN-rail: 76.00 x 31.50 x 31.00				mm mm mm
weight	horizontal package, 3.3 Vdc, 5 Vdc, 9 Vdc & 12 Vdc output horizontal package, 15 Vdc & 24 Vdc output chassis mount DIN-rail		18.0 18.5 38.0 58.0		g g g g
case material	Black plastic, flame-retardant and heat-resistant (UL94V-0)				

Downloaded from Arrow.com.

MECHANICAL DRAWING

units: mm [inch]
pin diameter tolerance: ±0.10 [±0.004]
tolerance: ±0.50 [±0.020]

PIN CONNECTIONS	
PIN	Function
1	AC(N)
2	AC(L)
3	no pin
4	-Vo
5	+Vo

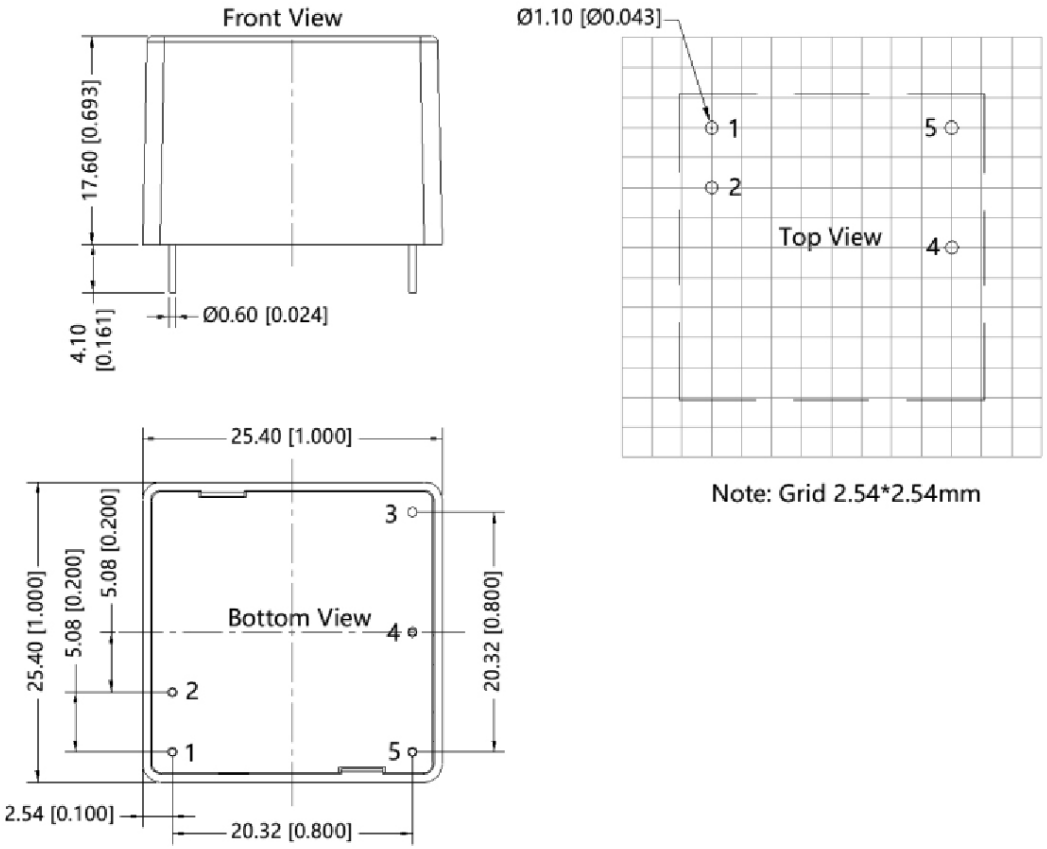

Downloaded from Arrow.com.

MECHANICAL DRAWING

units: mm [inch]
wire range: 24~12 AWG
tightening torque:Max 0.4 N·m
tolerance: ±1.0 [±0.039]

PIN CONNECTIONS	
PIN	Function
1	AC(N)
2	AC(L)
3	-Vo
4	+Vo

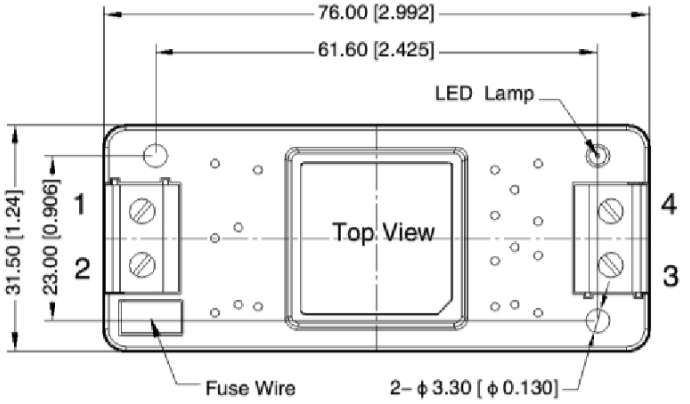

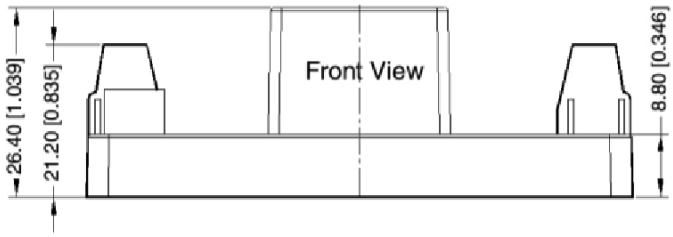

units: mm [inch]
wire range: 24~12 AWG
tightening torque:Max 0.4 N·m
mounting rail: TS35, must be connected to safety ground
tolerance: ±1.0 [±0.039]

PIN CONNECTIONS	
PIN	Function
1	AC(N)
2	AC(L)
3	-Vo
4	+Vo

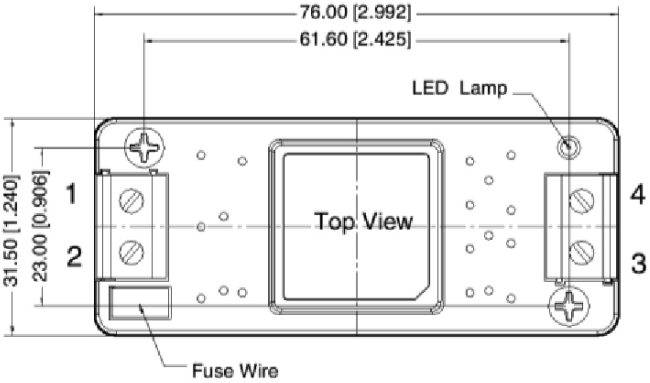

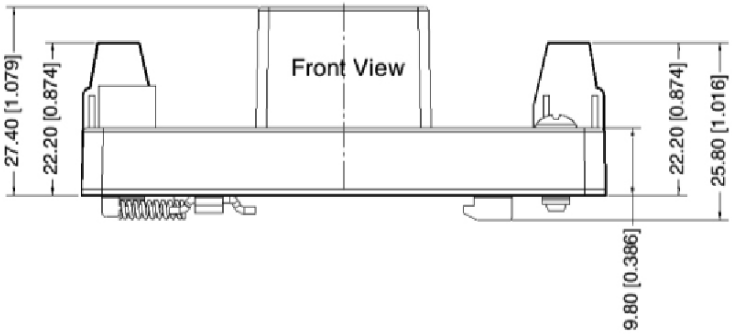

Downloaded from Arrow.com.

APPLICATION DESIGN REFERENCE

Figure 1

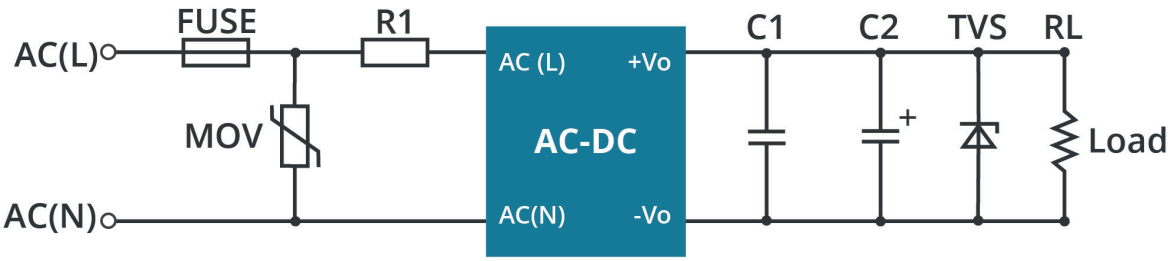

Table 1

Part No.	C1(μF)	C2(μF)	FUSE	R1	TVS	MOV
PSK-3D-3	1	150	1A/300V, slow-blow, required	12Ω/3W	SMBJ7A	S10K350
PSK-3D-5		150			SMBJ7A	
PSK-3D-9		120			SMBJ12A	
PSK-3D-12		120			SMBJ20A	
PSK-3D-15		120			SMBJ20A	
PSK-3D-24		68			SMBJ30A	

Output Filtering Components:
An electrolytic capacitor with high frequency operation, low ESR, and at least 20% margin on rated output voltage is recommended for C2. C1 should be a ceramic capacitor and the TVS will help protect downstream electronics in the unlikely event of converter failure.

EMC RECOMMENDED CIRCUIT

Figure 2
EMC APPLICATION CIRCUIT WITH HIGHER REQUIREMENTS

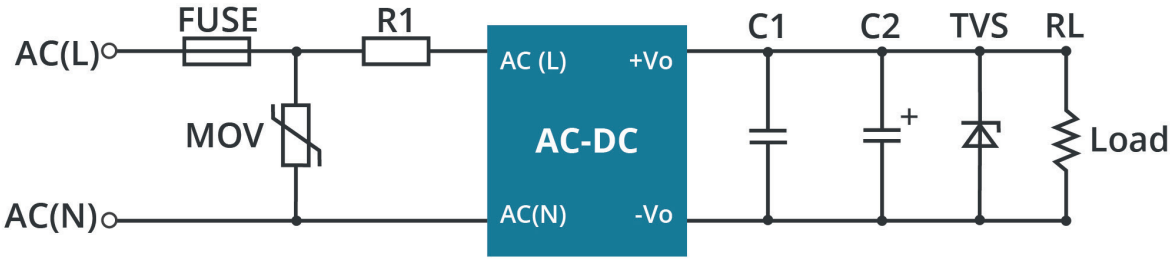

Table 2

Components	Recommended Value
MOV	S14K350
R1	33Ω/3W
FUSE	2A/300V, slow-blow, required

Downloaded from Arrow.com.

EMC RECOMMENDED CIRCUIT (CONTINUED)

Figure 3
RECCOMENDED CIRCUIT FOR CLASS I EQUIPMENT

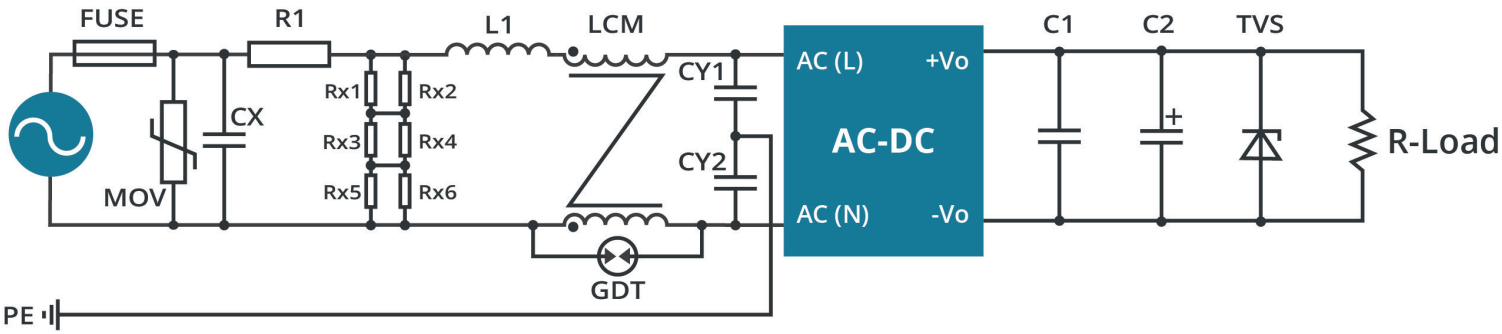

Recommended when the output terminal of the product needs to be connected to PE or connected to PE through a Y capacitor

Table 3

Components	Recommended Value
FUSE	2A/300V, slow-blow, required
MOV	S14K350
CX	334K/305Vac
R1	33Ω/3W (wire-wound resistor, required)
L1	1.2mH/0.3A
CY1/CY2	1nF/400Vac
GDT	300V/1KA
LCM	20mH

Note: Rx1/Rx2/Rx3/Rx4/Rx5/Rx6 is the bleeder resistance of CX, and the recommended resistance value is 1.5MΩ/150Vdc.

Downloaded from Arrow.com.

DERATING CURVE

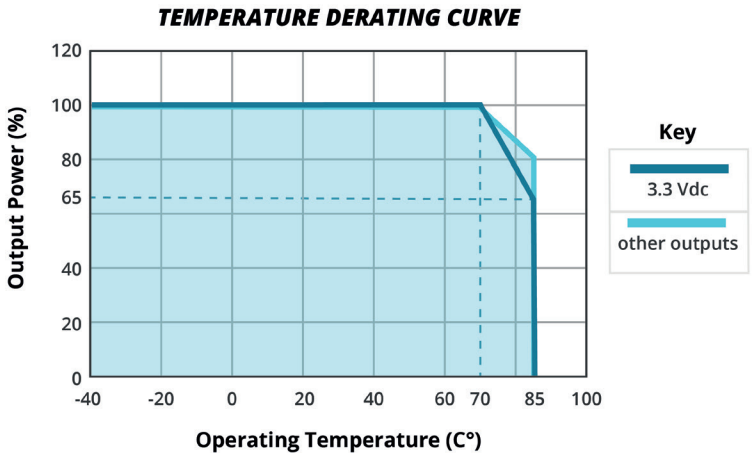

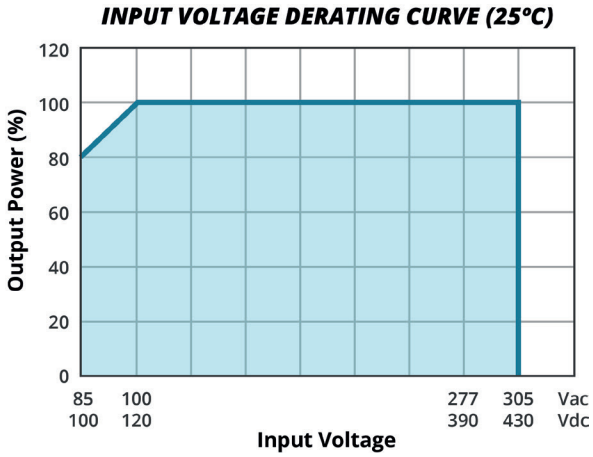

Note: 1. With an AC input between 85~100Vac and DC input between 100~120Vdc, the output power must be derated as per temperature derating curves.
2. This product is suitable for applications using natural air cooling; for applications in closed environment please consult with CUI.

EFFICIENCY CURVES

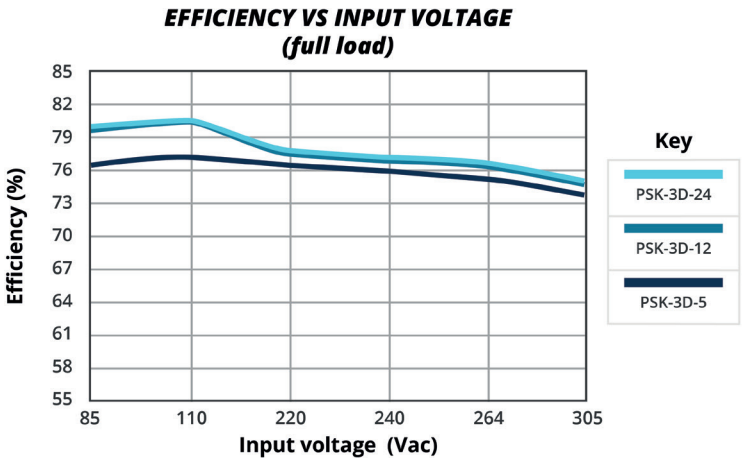

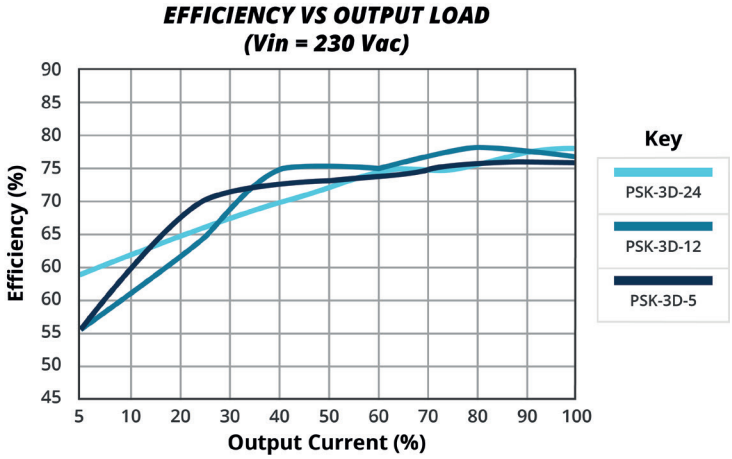

Downloaded from Arrow.com.

REVISION HISTORY

rev.	description	date
1.0	initial release	01/28/2021
1.01	derating curves updated	01/19/2022
1.02	no load power consumption updated	05/03/2022
1.03	UKCA mark added	06/13/2022
1.04	EMC circuit for Class I added	01/10/2024

The revision history provided is for informational purposes only and is believed to be accurate.

CUI INC
a bel group

Headquarters
20050 SW 112th Ave.
Tualatin, OR 97062
800.275.4899

Fax 503.612.2383
cui.com
techsupport@cui.com

CUI offers a two (2) year limited warranty. Complete warranty information is listed on our website.

CUI reserves the right to make changes to the product at any time without notice. Information provided by CUI is believed to be accurate and reliable. However, no responsibility is assumed by CUI for its use, nor for any infringements of patents or other rights of third parties which may result from its use.

CUI products are not authorized or warranted for use as critical components in equipment that requires an extremely high level of reliability. A critical component is any component of a life support device or system whose failure to perform can be reasonably expected to cause the failure of the life support device or system, or to affect its safety or effectiveness.

Downloaded from Arrow.com.