REV.	DESCRIPTION/ECO NO.	DATE
REL.	RELEASED TO CAD, DELETE EW88,	1/1/00
	EW84, EW08, EW46, EW61	
A	ADD LAMPS EW33, EW37, EW89	2/29/00
B	REVISE REV'S # SYSTEM & CHNG.	11/19/01
	DIM LINE POSITION	
C	CHANGE TO LEAD (Pb) FREE/EW10	2/24/05

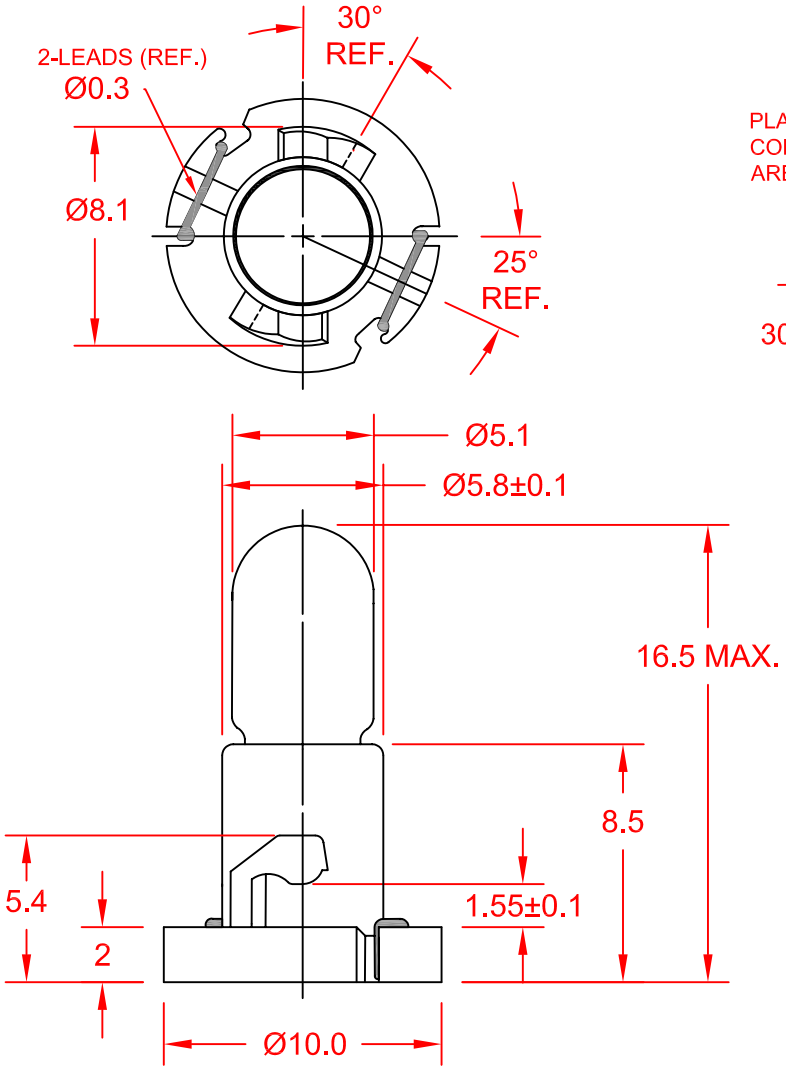

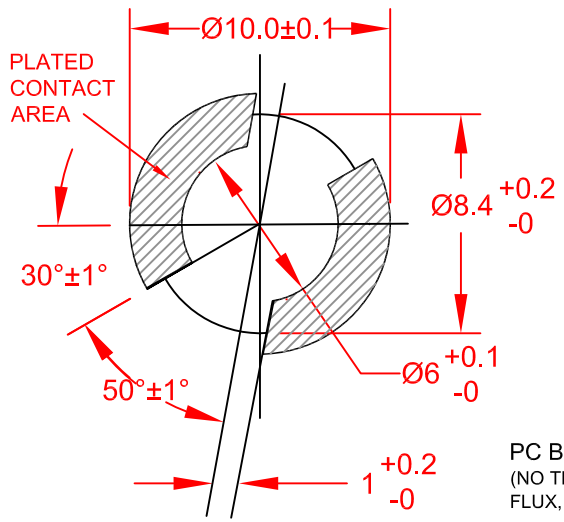

PC BOARD PUNCH PATTERN
(NO TREATMENT SUCH AS APPLICATION OF FLUX, SHALL BE DONE.)

JKL LAMP NUMBER	VOLTS RATED	AMPS ±10%	*MSCP ±25%	*LUMENS ±25%	AVERAGE LIFE HRS.	FILAMENT TYPE
ENW2-EW27	5.0	.040	.028	0.35	10,000	C-2R
ENW2-EW50	8.0	.050	.095	1.19	10,000	C-2V
ENW2-EW26	10.0	.040	.080	1.01	10,000	C-2F
ENW2-EW44	12.0	.040	.090	1.13	10,000	C-2V
ENW2-EW48	14.0	.040	.150	1.89	16,000	C-2V
ENW2-EW07	14.0	.080	.300	3.77	15,000	C-2V
ENW2-EW10**	14.0	.100	.500	6.29	10,000	C-2F
ENW2-EW33	14.0	.125	.700	9.00	10,000	C-2F
ENW2-EW37	14.0	.125	.700	9.00	10,000	C-2V
ENW2-EW89	14.0	.140	.880	11.00	14,000	C-2F
ENW2-EW40	18.0	.040	.150	1.89	10,000	C-2F

* LAMP RATED ONLY WITHOUT BASE.
** LAMP GLASS AND BASE ASSEMBLY LEAD (Pb) FREE.

CONTACT JKL FOR LEAD (Pb) FREE LOT IDENTIFICATION.

METRIC THIRD ANGLE PROJECTION	DIMENSIONS ARE IN MILLIMETERS TOLERANCE UNLESS OTHERWISE SPECIFIED 1 PL +/- 0.2 2 PL +/- 0.20 ANGLE +/- 0	JKL COMPONENTS CORPORATION				
		TITLE	T-1 1/2 NEO-WEDGE BASE WITH MULTIPLE LAMP LISTING			
DRAWN BY L. WENGSTROM	APPV'D BY J.K. DATE 2/24/05	SIZE A	FSCM NO. 55335	DRAWING NO.	ENW2-MULTI	
- CAD DRAWING - MANUAL REVISIONS NOT PERMITTED		SCALE NONE	RELEASED DATE 1/1/00	REVISION DATE 2/24/05	REV. NO. C	SHEET 1 OF 1

Downloaded from Arrow.com.