MICRO SPEAKER

Product No. 131135

BMS1511F-11C-08H03-DS

Issue no. BS/TES01.1697

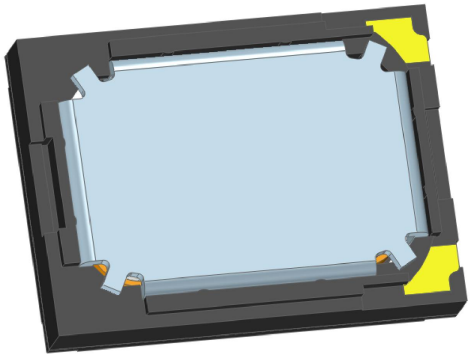

Features:

- RoHS

BESTAR Holdings Co., Ltd.

www.be-star.com | info@be-star.com

Downloaded from Arrow.com.

Content:

1 Characteristics 3
1.1 Technical terms 3
1.2 Test method 4
1.3 Frequency Response Curve 5
1.4 F0 Curve 6
1.5 Total Harmonic Distortion 7
1.6 R&B Curve 8
1.7 TS Parameter.....9
1.8 Amplitude.....9
2 Part List 10
3 Dimension 11
4 Reliability Test 12
5 Packing 13
5.1 Packing drawing 13
5.2 Packing quantity 13
6 History change record 14
7 Important Notice 15

Downloaded from Arrow.com.

1.Characteristics

1.1 Technical terms

1. Size	15*11*H3.0mm(uint)
2. Impedance at 2KHz	8±20%Ω
3. Lowest Resonance frequency	800±20%Hz(in 1cc box)
4. Frequency Response	F0~20KHz
5. Rated input power	1.0W(in 1cc box)
6. Maximum input power	1.1W(in 1cc box)
7. Buzz & Rattle(at sine wave 2.83V)	must be normal between 300~3400Hz(in 1cc box)
8. SPL(1.0W 10cm sine wave)	95±3dB at 2KHz (in 1cc box)
9. THD(1.0W 10cm sine wave)	≤10% at 1kHz (in 1cc box)
10. Weight	≈1.6g
11. Operating temperature	-20...+60℃
12.Storage temperature	-20...+70℃

Downloaded from Arrow.com.

1.2 Test method:

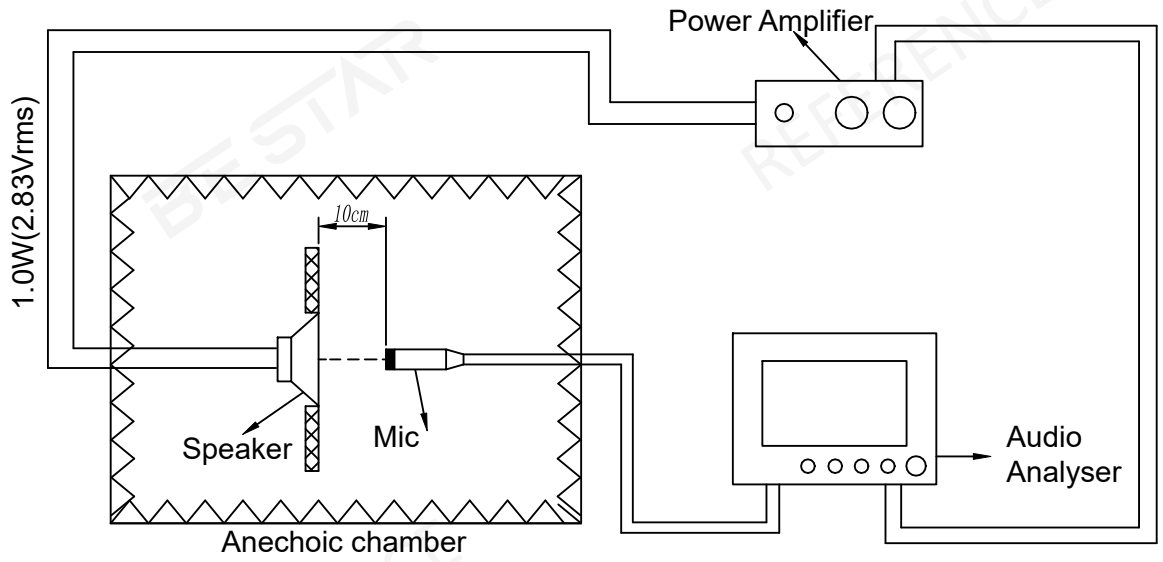

Downloaded from Arrow.com.

1.3 Frequency Response Curve (only for reference)

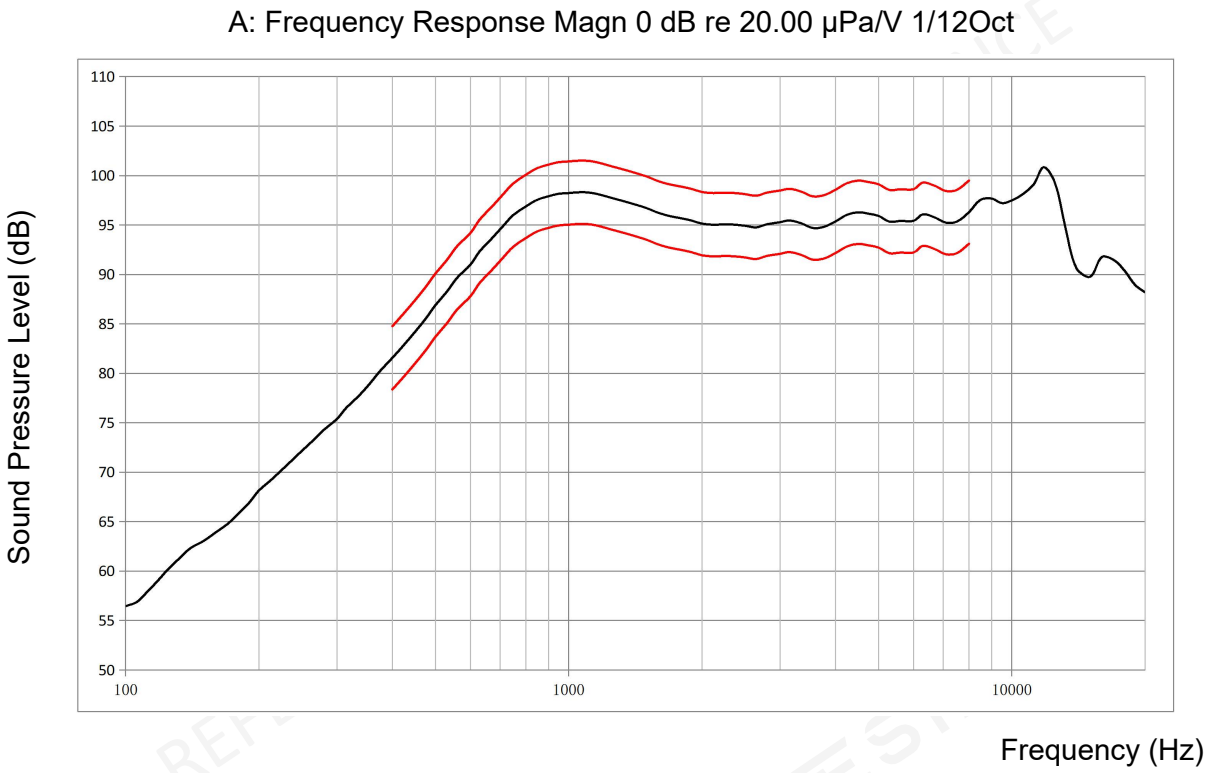

1.3.1 Sensitivity

SPL is expressed in dB rel 20 µPa,computed according to IEC 268-5.
Measurement set up according chapter 1.2 and parameters according chapter 1.3.

SPL upper and lower limits											
	400	700	800	1000	1320	2000	3000	4000	5000	6000	8000
Upper	+4	+4	+4	+3	+3	+3	+4	+4	+4	+4	+4
Lower	-4	-4	-4	-3	-3	-3	-4	-4	-4	-4	-4

Downloaded from Arrow.com.

1.4 F0 Curve (only for reference)

A: Frequency Response Magn 0 dB re 20.00 µPa/V 1/12Oct

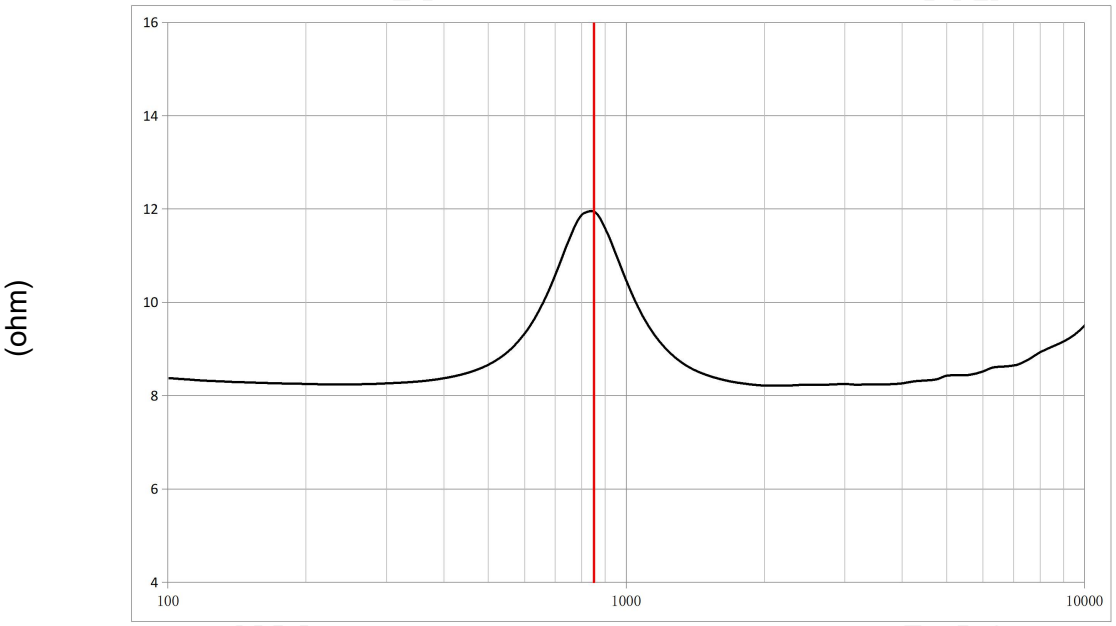

1.4.1 Resonance Frequency

Resonance frequency is measured according test set up in chapter 1.2 and parameters according chapter 1.4

Downloaded from Arrow.com.

1.5 Total Harmonic Distortion (only for reference)

A: Frequency Response Magn 0 dB re 20.00 µPa/V 1/12Oct

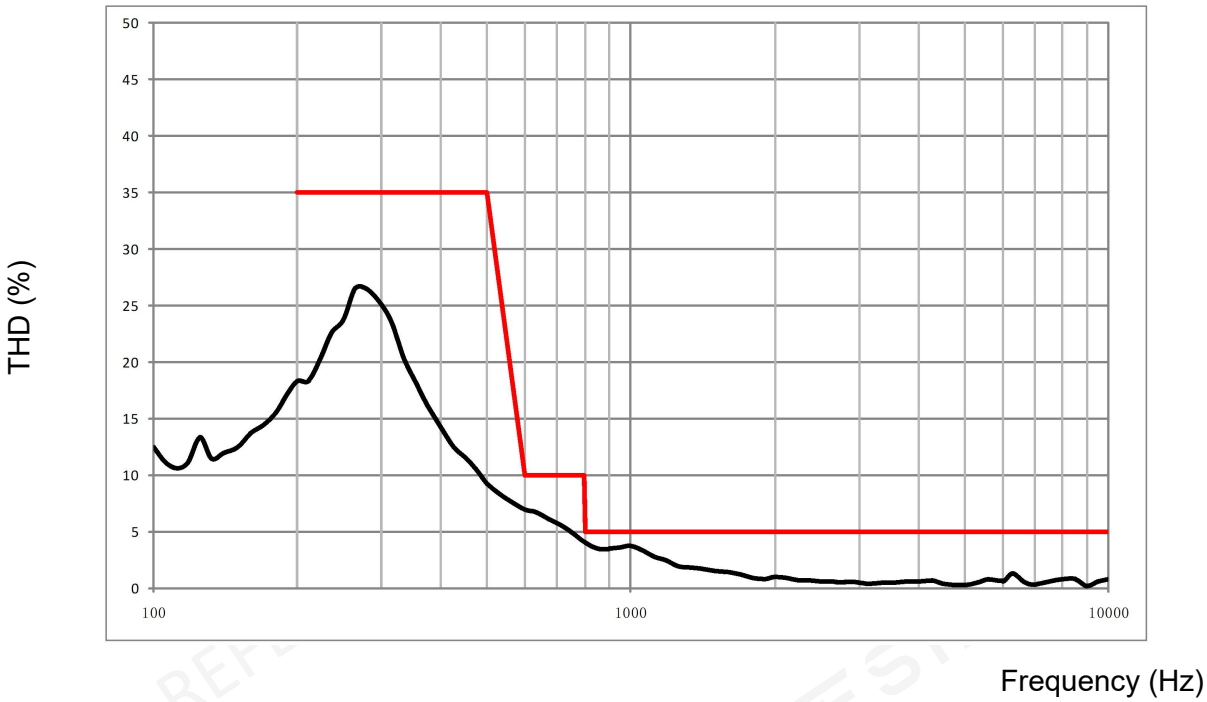

1.5.1 THD

THD is measured according test set up in chapter 1.2 and parameters according chapter 1.5

THD upper limit							
	200	500	600	799	800	1000	10000
Upper	35	35	10	10	5	5	5

Downloaded from Arrow.com.

1.6 R&B Curve (only for reference)

A: Frequency Response Magn 0 dB re 20.00 µPa/V 1/12Oct

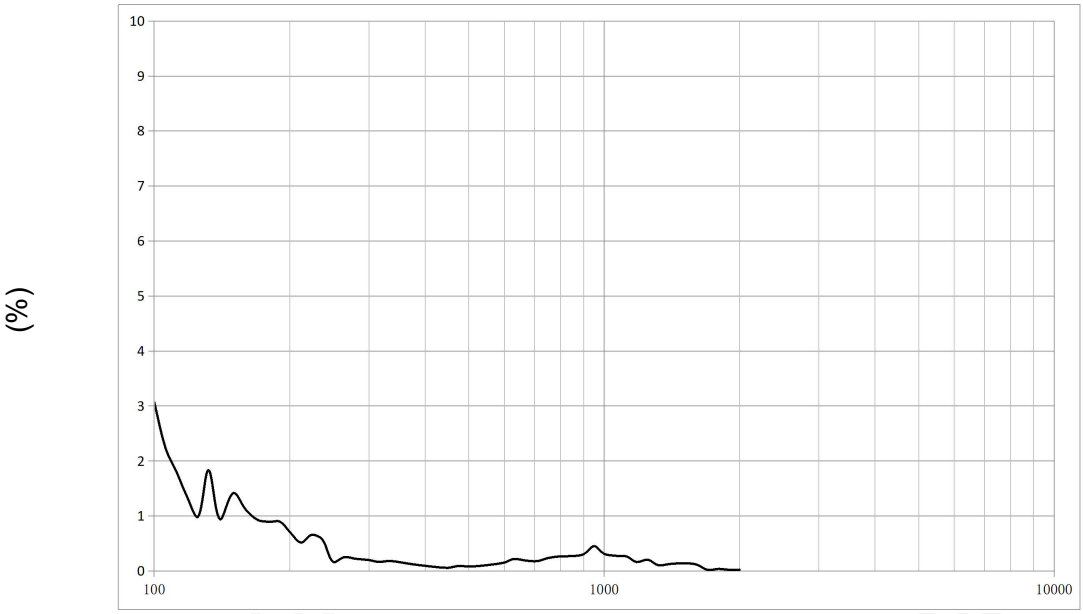

1.6.1 R&B

R&B is measured according test set up in chapter 1.2 and parameters according chapter 1.6

Downloaded from Arrow.com.

1.7 TS Parameter (In 1cc box test)

Fs(Hz)	860	Rms(Kg/s)	0.088
Re(Ohm)	7.28	BL(T/m)	0.745
Le(mH)	0.032	Mms(g)	0.064
Cms(mm/N)	0.469	Vas(L)	0.0008
Sd(cm^2)	1.1	Qms	4.292
Qts	2.262	Qes	4.861
Cmes(uF)	115.5	XMax(mm)	0.35

1.8 Amplitude (In 1cc box test)

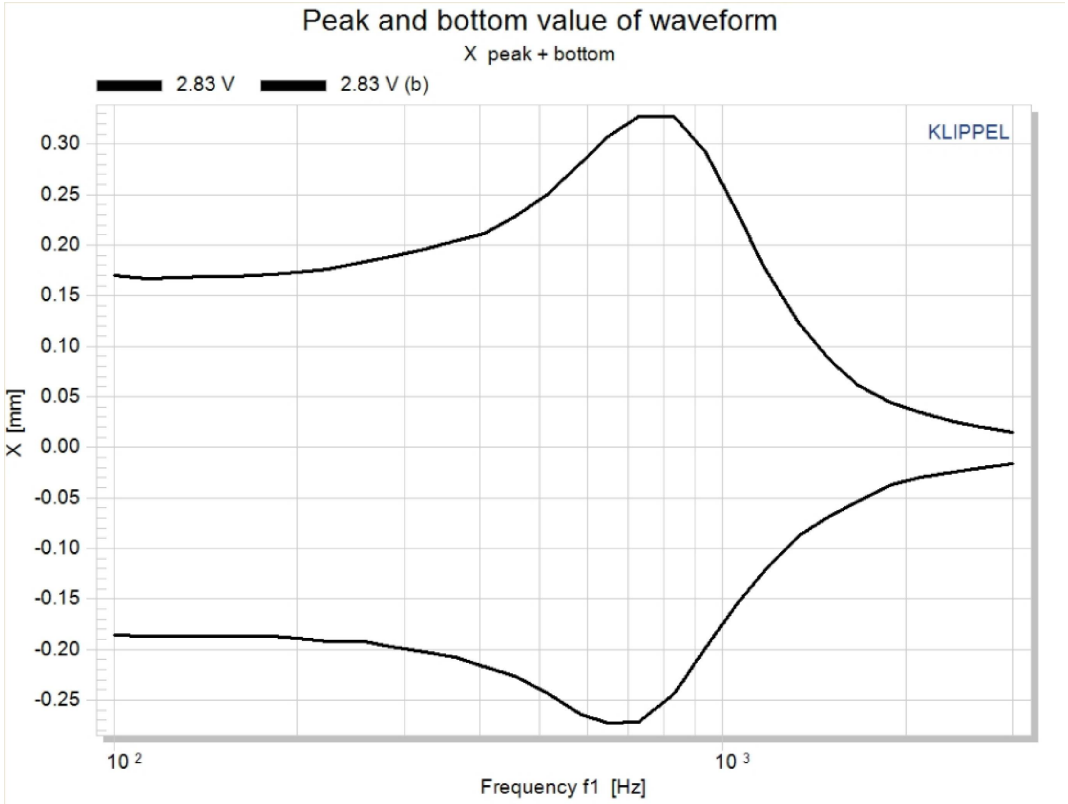

Downloaded from Arrow.com.

2.Part List

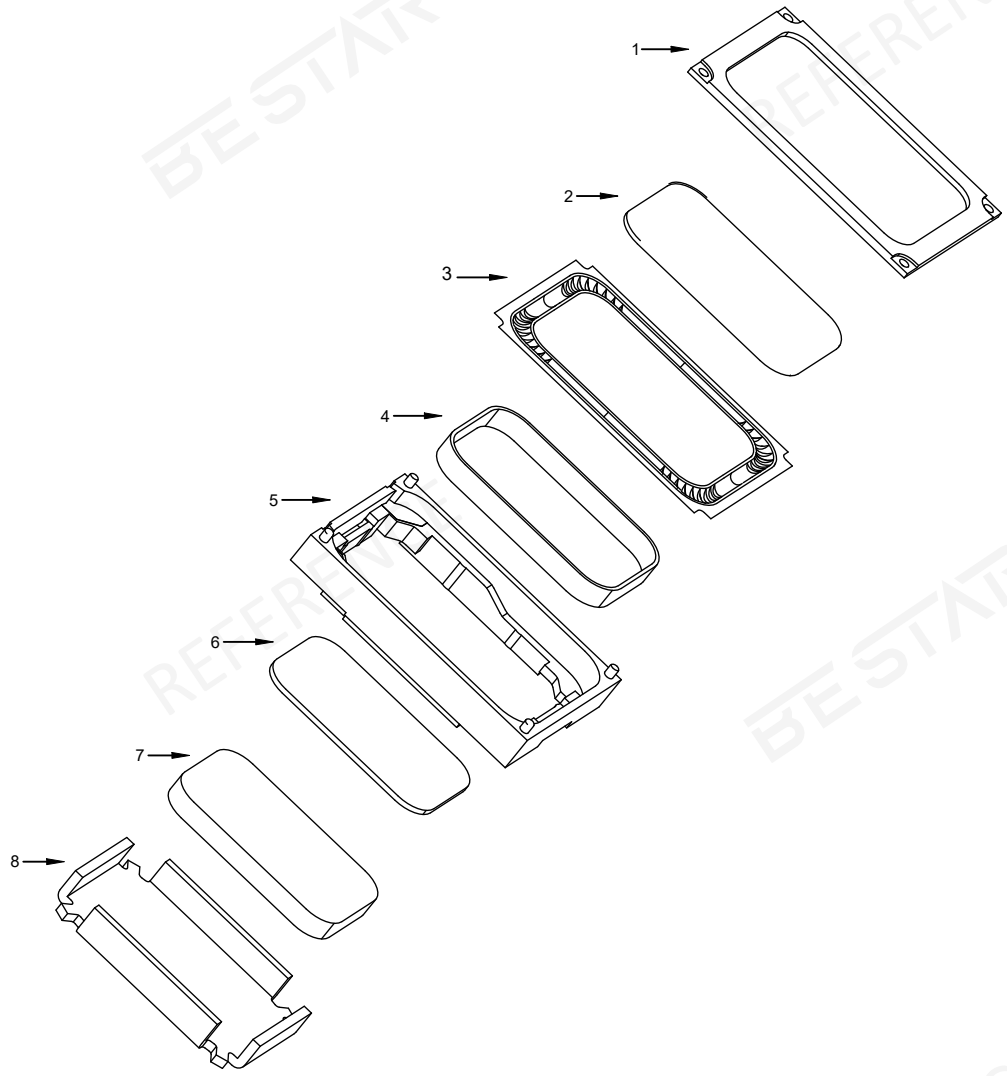

8. Yoke	SPCC
7. Magnet	NdFeB
6. Plate	SPCC
5. Frame	PPA
4. Voice coil	Cu
3. Diaphragm	Al Compound
2. Dome	Al Compound
1. Front cover	PPA

Downloaded from Arrow.com.

3. Dimension

Tolerance:±0.2mm

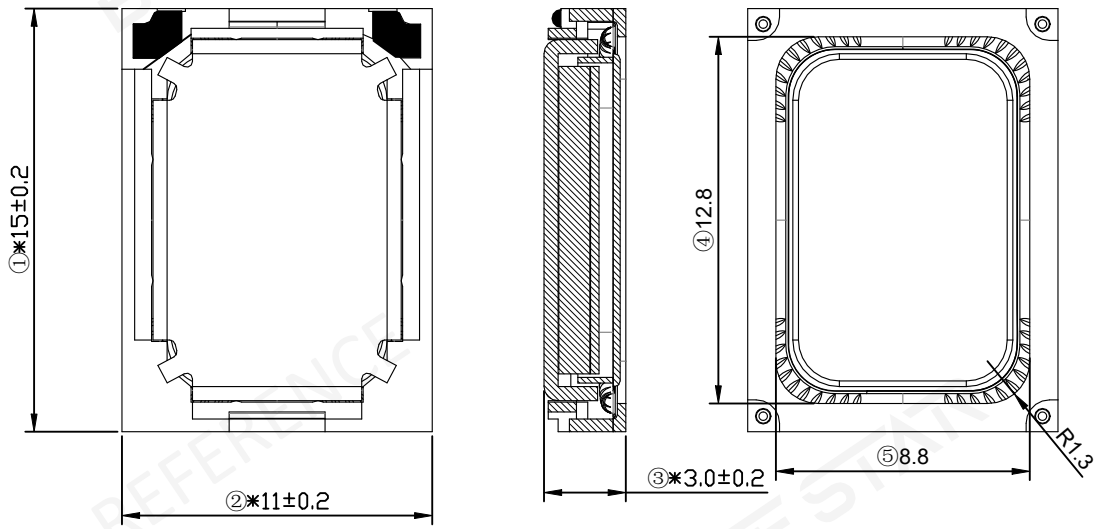

Speaker Front Cavity

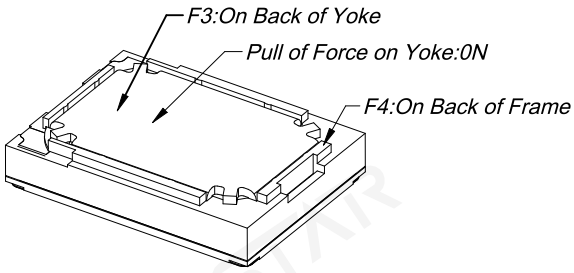

Speaker Rear Cavity

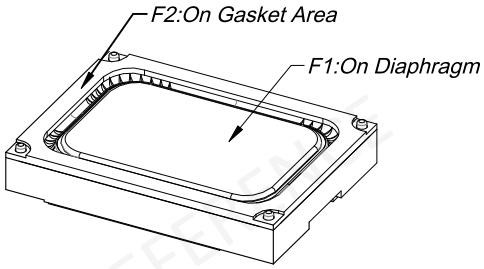

Max.Permited Compression Forces			
NO.	From	TO	Maxmum Forces
1	F1		0N
2	F3	F2	10N
3	F4	F2	10N

Downloaded from Arrow.com.

4. Reliability test

4.1 High temperature preservation test

Temperature	+70℃
Duration	96hrs

4.2 Low temperature preservation test

Temperature	-20℃
Duration	96hrs

4.3 Thermal shock test

Cycles	10

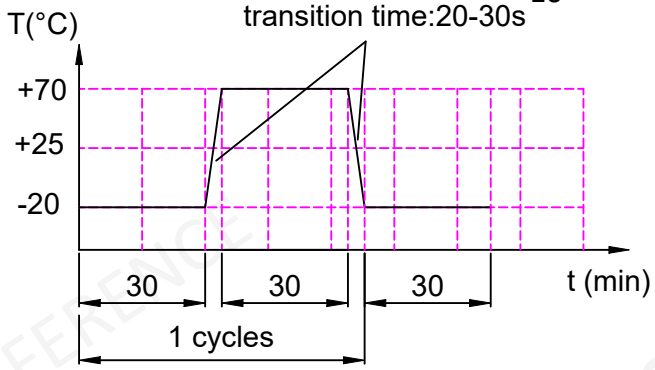

4.4 Damp Heat

Temperature	40±3°C
Relative Humidity	90%-95%RH
Duration	96hrs

4.5 Ordinary Temperature Life

Power (Nom)	1.0W (in 1cc box)
Signal	White noise/ FO~10KHz
Duration	96hrs

4.6 Drop Test

Height	1.0m(mounted in a 100g fixture)
Drop face	thick ness wooden board (20mm)
Times	three times in each direction

Notice:

1.Immediately after reliability test,the samples shall be stored under climatic conditions such as normally exist in ordinary rooms or laboratories.Unless otherwise noted,the recovery period shall be 4hrs at least before performance testing.After the waterproofing test, the sample should be stored immediately under the usual weather conditions in ordinary room or laboratory, and the test should be carried out 24 hours after recovery.

2.After any of the above tests the response at 2~5KHz shall not deviate more than ±3 dB from the initial value.

Downloaded from Arrow.com.

5. Packing

5.1 Packing drawing (unit:mm)

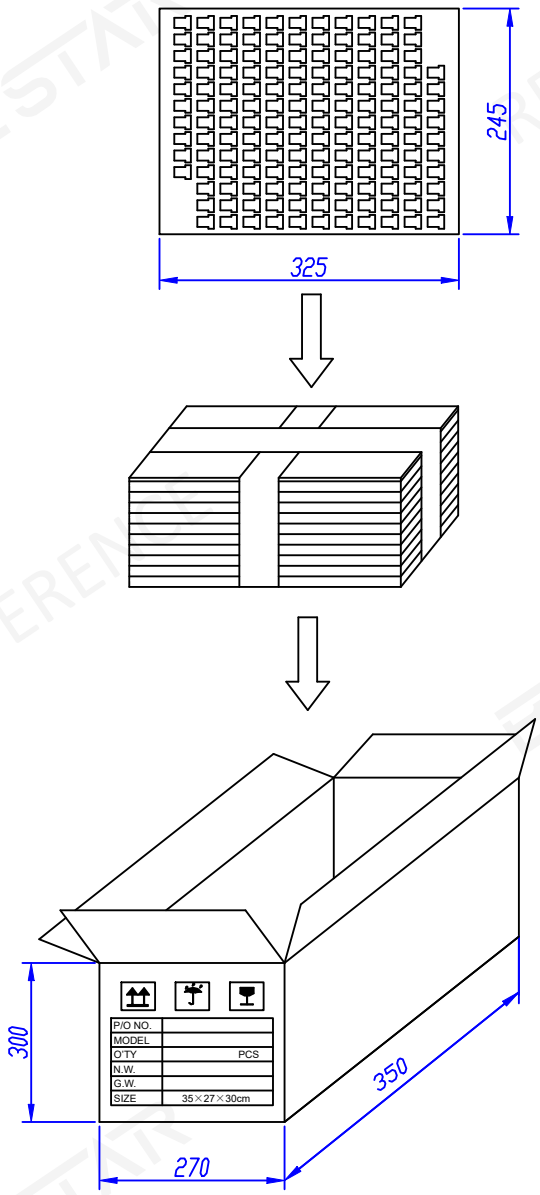

5.2 Packing quantity

1) 150pcs per carton
2) 24pcs carton per box
3) total 3600pcs per box,
4) box size: 350X270X300mm

Downloaded from Arrow.com.

6. History change record

Version	Change Items	Date	Drawn	Checked	Approved
A	First Edition	2017.08.25	Judy. Yang	Peter.Huang	Jason.Zhang
B	Change the Rated Input Power	2018.02.28	Judy. Yang	Peter.Huang	Jason.Zhang
B1	Change new template	2019.06.26	Judy. Yang	Peter.Huang	Jason.Zhang

REFERENCE BESTAR

Downloaded from Arrow.com.

7.Important Notice

7.1 The products mustn't be washed

7.2 Storage Condition （Packaging）

The products should be stored in the room ,where the temperature/humidity is stable. And avoid suchplaces where there are large temperature changes. Please store the products at the following conditions: Temperature: -10 to + 40℃ Humidity: 15 to 85% R.H.

7.3 Expire Date on Storage

Expire date (Shelf life) of the products is six months after deliveried under the conditions of a sealed and an unopened package. Please use the products within six months after deliveried.

If you store the products for a long time (more than six months), use carefully because the products may be degraded in the solderability and/or rusty.Please confirm solderability and characteristics for the products regularly.

7.4 Notice on Product Storage

(1) Please do not store the products in a chemical atmosphere (Acids, Alkali, Bases, Organic gas, Sulfides and so on), because the characteristics may be reduced at quality, and/or be degraded in the solderability due to the storage in a chemical atmosphere.

(2) Please use the products immediately after the package is opened, because the characteristics may be reduced at quality, and/or be degraded in the solderability due to storage under the poor condition.

7.5 Rated and Max input power

Rated input power

Rated input power is the maximum (limit) value which can be input to the component intentionally. If the actual input power to component keeps exceeding Rated Input power, it will damage the component acoustic performances and reliability. In the worst case, the component will get broken and no sound.

Max input power

Max input power is the maximum (limit) value for unexpected input power which is caused in the customer's circuit like surge voltage. If the actual input power to component keeps exceeding Maximum input power, it will break the component and cause no sound in a short time. Please note that component will have a risk to get broken if the unexpected input power continues.

The value of input power is set based on the sinusoidal power in the normal speaker use. If the special signal is input to component, the values of Rated and Max input power will be different. Please make a well-investigation at your laboratory in the case of the special signal input.

Downloaded from Arrow.com.