Data Sheet | Item Number: 788-156

Basic relay; Nominal input voltage: 24 VDC; 2 changeover contacts; Limiting continuous current: 8 A; Module width: 13 mm; Module height: 15 mm

https://www.wago.com/788-156

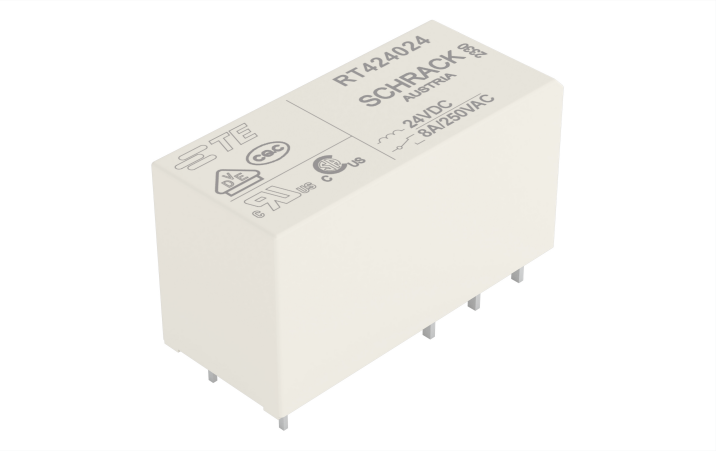

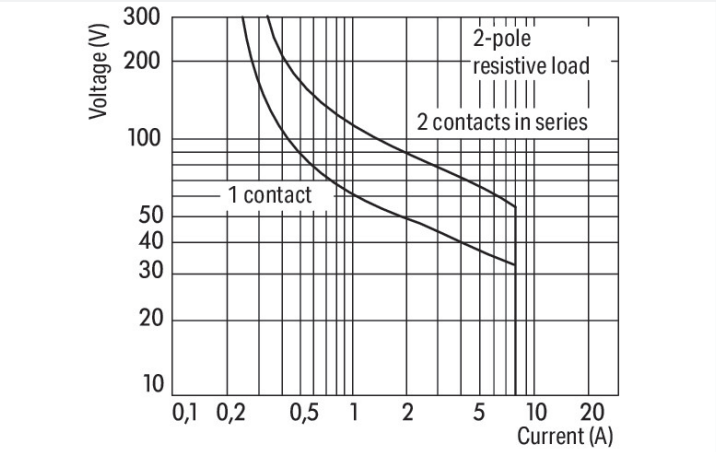

DC load limit curve

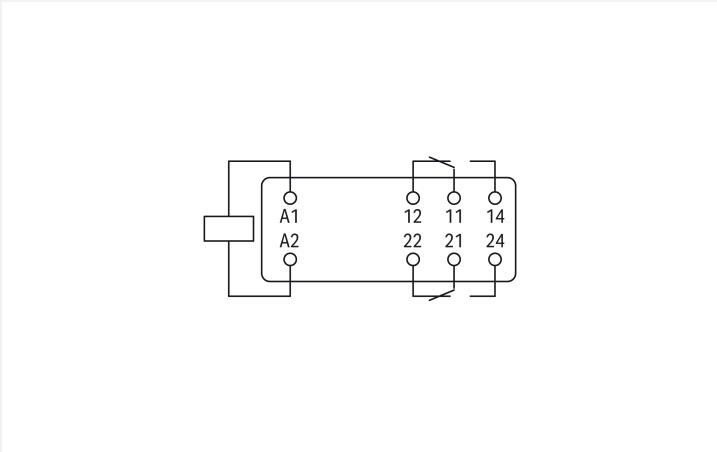

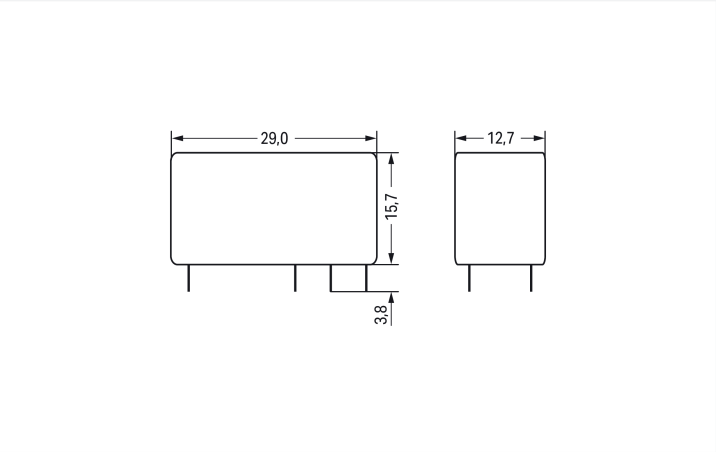

Dimensions in mm

Downloaded from Arrow.com.

Technical data

Control circuit

Nominal input voltage U_N	24 VDC
Nominal input current at U_N	17 mA

Load circuit

Number of changeover/switchover contacts	2
Contact material (relay)	AgNi 90/10
Limiting continuous current	8 A
Inrush current (resistive) max.	(AC) 15 A / 4 s
Switching Voltage, Max.	250 VAC
Switching power (resistive) max.	AC 2000 VA; DC (see load limit curve)
Utilization category	AC-15: 3 A / 250 VAC DC-13: 2 A / 24 VDC
Recommended minimum load	12 V / 10 mA
Pull-in time (typ.)	8 ms
Drop-out time (typ.)	6 ms
Bounce time (typ.)	10 ms
Electrical life (NO; resistive load; 23 °C)	10 x 10^3 switching operations
Mechanical life	30 x 10^6 switching operations
Switching frequency with/without load (max.)	6 min^{-1} / 1200 min^{-1}

Safety and protection

Dielectric strength (control/load circuit) (AC, 1 min)	5 kVrms
Dielectric strength (open contact) (AC, 1 min)	1 kVrms
Dielectric strength (load/load circuit) (AC, 1 min)	2.5 kVrms

Physical data

Width	12.7 mm / 0.5 inches
Height from the surface	15.7 mm / 0.618 inches
Depth	29 mm / 1.142 inches

Mechanical data

Mounting type	Pluggable module

Material data

Note (material data)	Information on material specifications can be found here
Fire load	0.68 MJ
Weight	13.6 g

Environmental requirements

Ambient temperature (operation at U_N)	-40 … +85 °C
Ambient temperature (storage)	-40 … +85 °C

Downloaded from Arrow.com.

Standards and Specifications

Standards/specifications	EN 61810-1

Commercial data

Product Group	6 (INTERFACE ELECTRONIC)
PU (SPU)	20 (1) pcs
Packaging type	Box
Country of origin	AT
GTIN	4044918971881
Customs tariff number	85364900990

Product Classification

UNSPSC	39122334
eCl@ss 10.0	27-37-16-01
eCl@ss 9.0	27-37-16-01
ETIM 9.0	EC001437
ETIM 10.0	EC001437
ECCN	NO US CLASSIFICATION

Environmental Product Compliance

CAS-No.	7439-92-1 7440-43-9
REACH Candidate List Substance	Cadmium Lead
RoHS Compliance Status	Compliant,No Exemption
SCIP notification number (Austria)	16380775-5ade-47b7-b9a2-473fd41b6d53
SCIP notification number (Belgium)	99d65ef7-ffbd-4096-989c-cba462daaed2
SCIP notification number (Bulgaria)	1614bc46-37d6-4889-be8f-0482bf04d1d7
SCIP notification number (Czech Republic)	a16d6cb2-7233-4e95-8194-d9e2c670886a
SCIP notification number (Denmark)	84aa989a-3ad6-43af-b3ff-bb1f2413bf5a
SCIP notification number (Finland)	f51fc8ff-91cb-4772-8ec2-2fedbaca3b79
SCIP notification number (France)	0ade93f4-ac11-4600-b3ea-008304b29311
SCIP notification number (Germany)	6ebdb412-9a95-425f-9893-d83d9ebd2f55
SCIP notification number (Hungary)	3fdaac84-0eb6-430a-8a53-7593428a0a71
SCIP notification number (Italy)	bc15bf02-e616-40ba-bfbc-7f7b9c3943cf
SCIP notification number (Netherlands)	8e3d2e72-86d1-49f4-bc9c-eae8cb6810ad
SCIP notification number (Poland)	1ba5e6a6-f056-4ac6-9a9e-3792e2447eaa
SCIP notification number (Romania)	b76ab434-8cd5-4d58-9095-b10d9911985a
SCIP notification number (Sweden)	24acd247-fe13-499d-9c3e-dcca0bee7c90

Downloads

Environmental Product Compliance

Compliance Search

Environmental Product Compliance 788-156

Downloaded from Arrow.com.

Documentation

Bid Text			
788-156	19.02.2019	xml 3.59 KB	
788-156	20.02.2019	docx 15.56 KB	

CAD/CAE-Data

CAD data	CAE data
2D/3D Models 788-156	WSCAD Universe 788-156

1 Compatible Products

1.1 Optional Accessories

1.1.1 Socket

1.1.1.1 Socket without relay

Item No.: 788-102
Relay socket; 2 changeover contacts; for 15 mm basic relays; gray

Downloaded from Arrow.com.