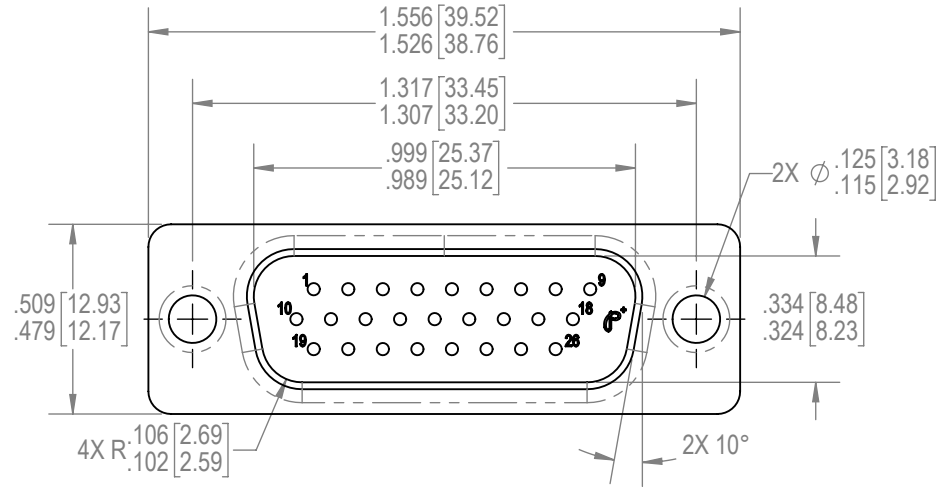

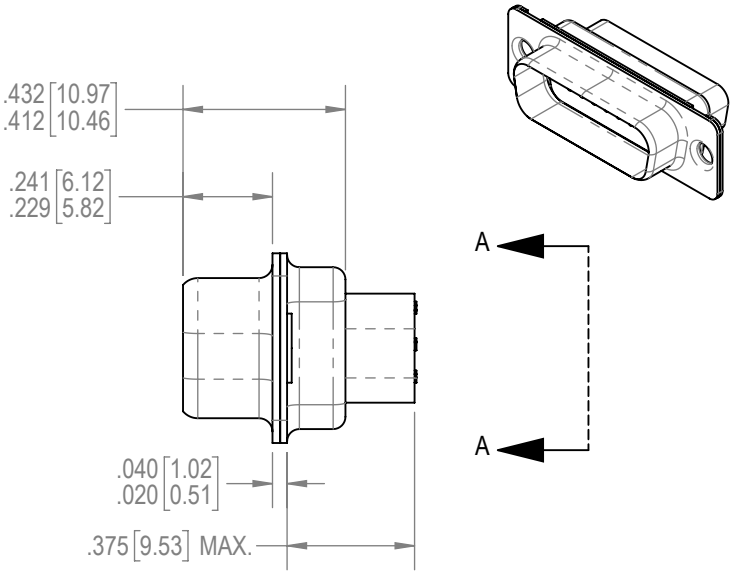

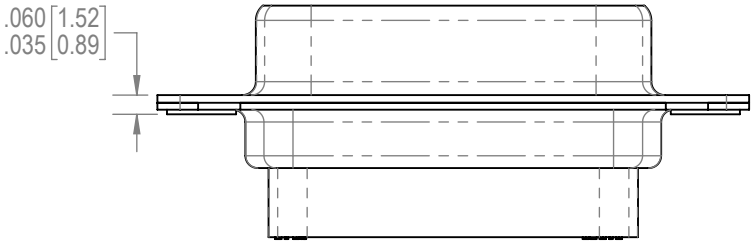

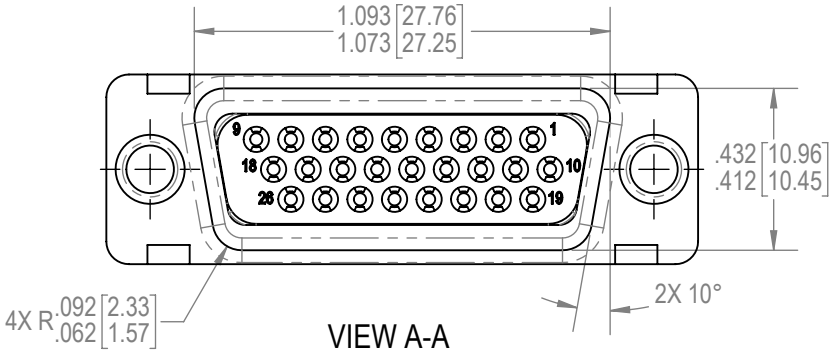

VIEW A-A

NOTES:

1. THE REQUIREMENTS FOR THE PRODUCT HERE IN SHALL CONSIST OF GSFC S311.
2. IN THE EVENT OF A CONFLICT BETWEEN THIS DOCUMENT AND GSFC S311, GSFC S311 SHALL TAKE PRECEDENCE.

BY: AP	CHK: ND	3RD ANGLE	POSITRONIC BELIEVES THE DATA ON THE DRAWING TO BE RELIABLE. THE USER EMPLOYS SUCH INFORMATION AT HIS OWN DISCRETION AND RISK. POSITRONIC ASSUMES NO RESPONSIBILITY FOR RESULTS OBTAINED OR DAMAGES INCURRED FROM USE OF SUCH INFORMATION IN WHOLE OR IN PART.
APR: AB	RELEASED DATE: 2024-01-17	SCALE: NTS	
TOLERANCES: ±.010 INCHES [0.25 mm] DIMENSIONS ARE IN INCHES. (MILLIMETER EQUIVELANTS GIVEN FOR REFERENCE ONLY)		PART NUMBER: 311P407-2P-B-12	SERIES: M24308
		TITLE: 311P407-2P-B-12	
		CREATED ON: 2024-01-17	SHEET: SHEET 1 OF 1 — REV: A

Positronic® CONNECTPOSITRONIC.COM

Downloaded from Arrow.com.