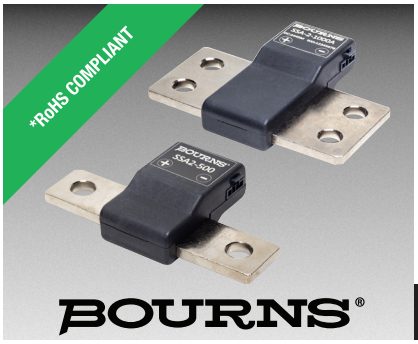

Features

- Nominal current: 100 A to 1000 A
- AC or DC circuits
- 1500 VDC reinforced isolation
- Tolerance of ±0.2 %
- Amplified differential output: ±2.5 V peak
- RoHS compliant*
- Assembled using AEC-Q compliant components (optional)

Applications

- Battery systems
- Renewable energy
- Motor drives
- EV charging stations

SSA-2 Series Analog Current Sensors

Specifications

Characteristic	SSA-2-100A	SSA-2-250A	SSA-2-500A	SSA-2-1000A
Nominal Current (A)	100	250	500	1000
Differential Analog Output ±2.6 volts maximum unclipped	±12.5 mV/A	±5 mV/A	±2.5 mV/A	±1.25 mV/A
Power Dissipation Rated current at primary terminations	4 W	9 W	17 W	35 W
Maximum Current (unclipped output)	200 A	500 A	1000 A	2000 A
Over Current (1 s, clipped)	600 A	1500 A	3000 A	6000 A
Power Supply (3.0 to 5.5 VDC) with high impedance load	@ 3.0 V, 20 mA typical		@ 5.5 V, 40 mA typical	
DC Offset @ 25 °C	≤ ±0.4 mV (10 Hz LP filter)			
Initial Accuracy @ 25 °C	±0.2 % (Offset is zeroed prior to calibrating using DC current)			
TCR (25 °C - 95 °C)	±30 PPM/°C			
Bandwidth (electronics)	300 kHz			
Reaction Time (typical)	1.6 μs (input step function, 50 % rise on input to 50 % rise on output)			
Common Mode Rejection Ratio	CMRR: -100 dB @ DC, -98 dB @ 10 kHz			
Common Mode Transient Immunity	CMTI: 80 kV/μS typical, 55 kV/μS minimum			
Signal to Noise Ratio (SNR)	VIN = 100 mVPP, fIN = 1 kHz, BW = 10 kHz 80 dB min., 84 dB typical VIN = 100 mVPP, fIN = 10 kHz, BW = 100 kHz 70 dB typical			
Long-Term Stability	< ±0.5 % 1000 hours 100 °C terminal temperature			
Reinforced Isolation	1500 VDC 1000 VAC RMS (maximum continuous working voltage)			
Dielectric Strength	3500 VAC RMS 1 minute			
Operating Temperature	-40 °C to +115 °C ambient -40 °C to +125 °C primary conductor (see derating curve on page 4)			
Storage Temperature	-55 °C to +125 °C			

Materials (RoHS Compliant)

Resistance Element.....Manganin™
Terminal Block.....Nickel-plated copper
Electronics Housing..... UL 94-V0 rated
Potting Material..... UL 94-V0 rated

Additional Information

Click these links for more information:

PRODUCT | TECHNICAL LIBRARY | INVENTORY | SAMPLES | CONTACT

Product Safety Notice

The SSA-2 Series Current Sensor must be used in a manner specified by this data sheet, otherwise the protection provided by the equipment may be impaired. The SSA-2 Series should not be treated as a structural part of the installation and must be properly supported on both ends.

CALIFORNIA WARNING: Can expose you to lead, a carcinogen and reproductive toxicant.
See www.P65Warnings.ca.gov

*RoHS Directive 2015/863, Mar 31, 2015 and Annex.
"Manganin" is a registered trademark of Isabellenhütte Heusler GmbH & Co. KG.

Specifications are subject to change without notice.
Users should verify actual device performance in their specific applications.
The products described herein and this document are subject to specific legal disclaimers as set forth on the last page of this document, and at www.bourns.com/docs/legal/disclaimer.pdf.

Downloaded from Arrow.com.

Product Dimensions

SSA-2-100A to SSA-2-500A

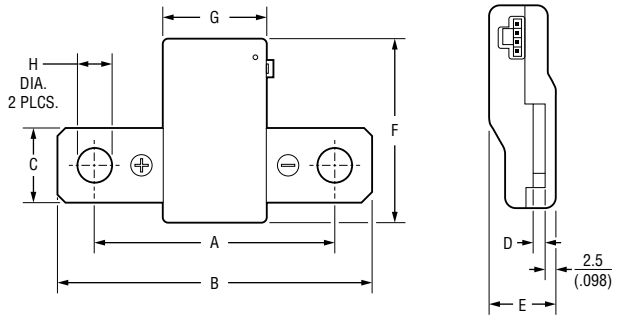

SSA-2-1000A

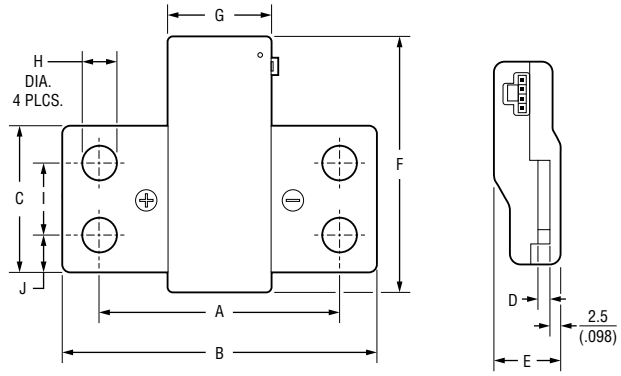

Product Dimensions

Model	SSA-2-100A	SSA-2-250A	SSA-2-500A	SSA-2-1000A
A	63.5 ± 0.5 (2.50 ± .020)			
B	84 ± 0.5 (3.307 ± .020)			
C	20 ± 0.5 (.787 ± .020)			40 ± 0.5 (1.575 ± .020)
D	3 ± 0.5 (.118 ± .020)		4 ± 0.5 (.157 ± .020)	
E	16.4 ± 0.5 (.646 ± .020)		17.4 ± 0.5 (.685 ± .020)	
F	48.7 ± 0.5 (1.917 ± .020)			68.7 ± 0.5 (2.705 ± .020)

Model	SSA-2-100A	SSA-2-250A	SSA-2-500A	SSA-2-1000A
G	28 ± 0.5 (1.102 ± .020)			
H	8.7 ± 0.5 (.343 ± .020)			
I	—	—	—	19 ± 0.5 (.748 ± .020)
J	—	—	—	10.5 ± 0.5 (.413 ± .020)
Mass (g)	67	69	84	145

DIMENSIONS: MM (INCHES)

Connectors

Mating Connector	Molex Part Number
4-Pin Female	1053071204
20-22 AWG Female Crimp Terminals	1053002200*
4-Pin TPA (Optional)	1053251004

* Use Gold (Au) plated contacts for 115 °C temperature rating.

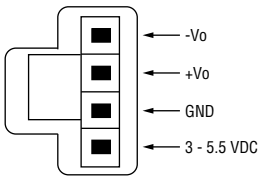

How to Order

SSA-2 - 100A - AE

Model

Nominal Current
- 100A = 100 A
- 250A = 250 A
- 500A = 500 A
- 1000A = 1000 A

AEC-Q Compliant Component Option
- Blank = Industrial Grade
- AE = Assembled using AEC-Q compliant components

Specifications are subject to change without notice.
Users should verify actual device performance in their specific applications.
The products described herein and this document are subject to specific legal disclaimers as set forth on the last page of this document, and at www.bourns.com/docs/legal/disclaimer.pdf.

Downloaded from Arrow.com.

Optional Base Mounting Fixtures

SSA-BASE (Model SSA-2-100A ~ SSA-2-500A)

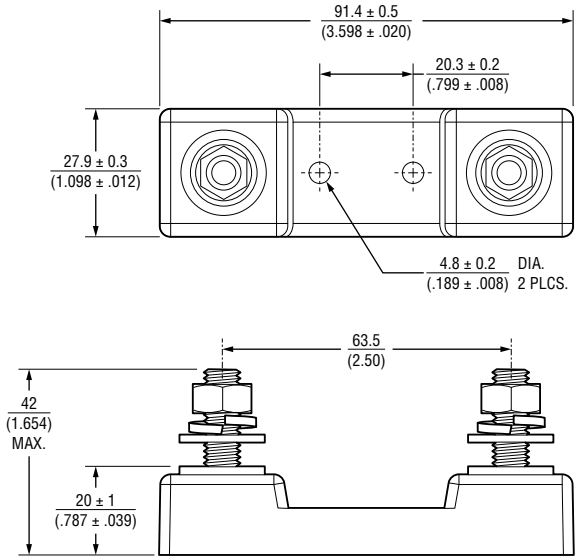

DIMENSIONS: MM (INCHES)

SSA-BASE-1K (Model SSA-2-1000A)

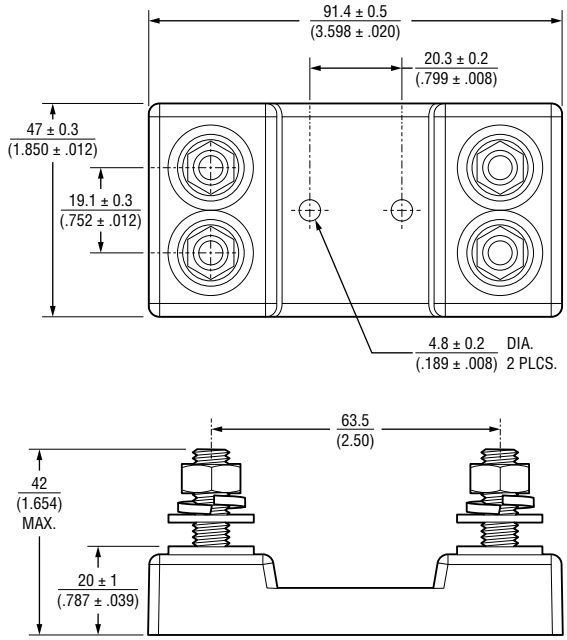

DIMENSIONS: MM (INCHES)

- Robust design
- 5/16-18 Stainless Steel Hardware
- Torque Nuts:
  11-13 ft-lb (15-17.6 N-m)
- UL 94-V0 rated materials

Optional SS-CABLE Power / Serial Connection

SS-CABLE-1M

Serial Output		
White	Analog (–)	Pin 1
Yellow	Analog (+)	Pin 2
Black	Ground	Pin 3
Red	+3.0 to 5.5 V	Pin 4

- For all SSA-2 models
- Color-coded 22 ga wire
- Two twisted pairs
- 1 meter standard length

Specifications are subject to change without notice.
Users should verify actual device performance in their specific applications.
The products described herein and this document are subject to specific legal disclaimers as set forth on the last page of this document, and at www.bourns.com/docs/legal/disclaimer.pdf.

Downloaded from Arrow.com.

Frequently Asked Questions

Q: How does the SSA-2 Series compare with Hall Effect technology?

A: When compared to Hall Effect technology, the SSA-2 Series Shunt Sensor - Analog will offer:

- Immunity to stray magnetic fields
- Unlike closed loop hall sensors, the SSA-2 Series has a unipolar power supply requirement
- No hysteresis
- Low-noise resolution and offset performance allows accurate low-current measurements
- Superior offset, gain and linearity performance over entire temperature range
- Low noise
- Higher bandwidth (300 kHz vs 50 kHz)
- Lighter weight
- Superior stability
- No sensitivity to conductor positioning
- No periodic calibration

Q: Is the SSA-2 Series suitable for AC measurements?

A: The wide bandwidth of the SSA-2 Series makes it appropriate for measuring AC as well as DC currents.

Q: How does the output vary with temperature?

A:

Q: Is there a derating for temperature?

A:

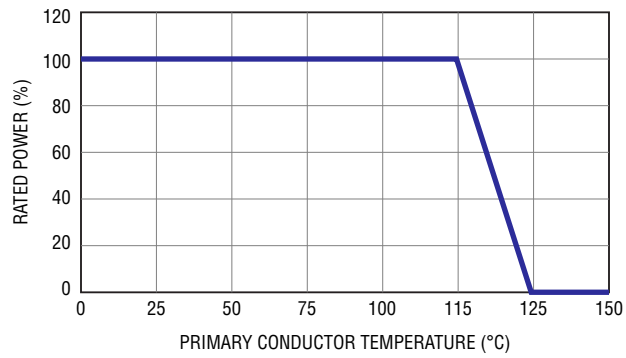

Q: What are the overload capabilities of the SSA-2 Series?

A: The output reading will saturate with an input current that exceeds the corresponding maximum unclipped voltage output of 2.62 volts. Ultimately, the overload capabilities are thermally limited per the derating curve.

Typical Output vs Temperature

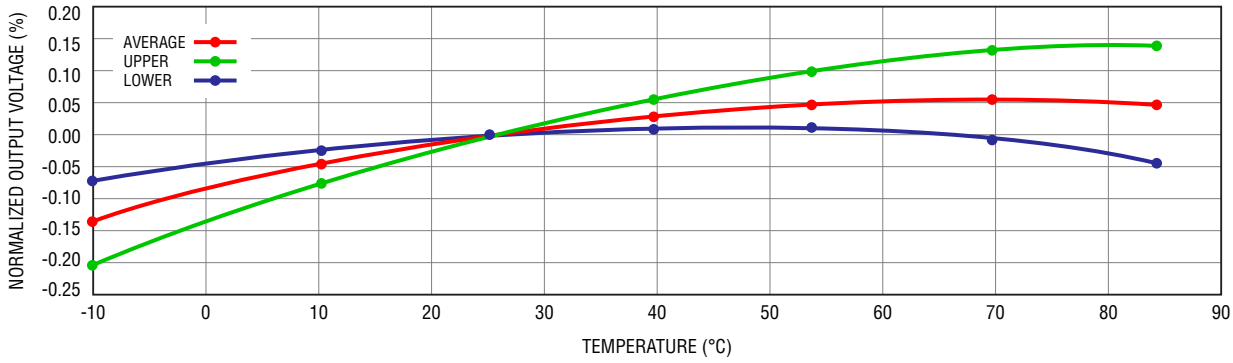

Specifications are subject to change without notice.
Users should verify actual device performance in their specific applications.
The products described herein and this document are subject to specific legal disclaimers as set forth on the last page of this document, and at www.bourns.com/docs/legal/disclaimer.pdf.

Downloaded from Arrow.com.

Frequently Asked Questions (Continued)

Q: What is the best way to connect to the SSA-2 Series terminals?

A: Make sure connections are clean and well prepared. Bolts must be torqued to the hardware manufacturer's recommendations. There should be sufficient clamping force to ensure proper connection. Overlap shown below should be taken as a minimum. Suitable for copper, copper-clad aluminum or aluminum conductors.

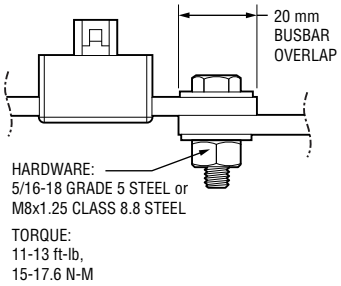

Q: How much heat does the SSA-2 Series Current Sensor create?

A: A majority of the heat generated by the SSA-2 Series is dissipated through the primary conductors. Care should be taken to ensure that the primary conductors are sized appropriately given expected amperage and conductor length. We recommend a 70 °C maximum conductor temperature. If there are thermal concerns, oversizing the conductors will help minimize the operating temperature of the shunt sensor.

Q: Is it necessary to install the SSA-2 Series on the low side of the circuit?

A: The SSA-2 Series Current Sensors are completely isolated, so it may be installed in either the low or high side of the circuit.

Q: What size wire is suitable for the SSA-2 Series?

A:

Copper Conductor Ampacity Ratings (continuous)					
mm²	AWG	Amps (75 °C)	mm²	AWG	Amps (75 °C)
13.3	6	65	107	0000 (4/0)	230
21.2	4	85	127	250 MCM	255
33.6	2	115	152	300 MCM	285
42.4	1	130	203	400 MCM	335
54	0 (1/0)	150	253	500 MCM	380
67	00 (2/0)	175	380	750 MCM	475
85	000 (3/0)	200	887	1500 MCM	625

Q: Thermal EMF?

A: Thermal EMF happens when the two sensing terminals of the shunt sensor experience different temperatures. This phenomenon is essentially eliminated with the differential output of the device. It is still possible that the two current carrying terminals could experience a temperature differential, however. This offset would be 0.5 mV/°C

Q: Is there a version with digital outputs?

A: Bourns plans to develop digital output versions in the very near future.

Specifications are subject to change without notice.
Users should verify actual device performance in their specific applications.
The products described herein and this document are subject to specific legal disclaimers as set forth on the last page of this document, and at www.bourns.com/docs/legal/disclaimer.pdf.

Downloaded from Arrow.com.

Frequently Asked Questions (Continued)

Q: Is there a functional diagram of the general layout?
A:

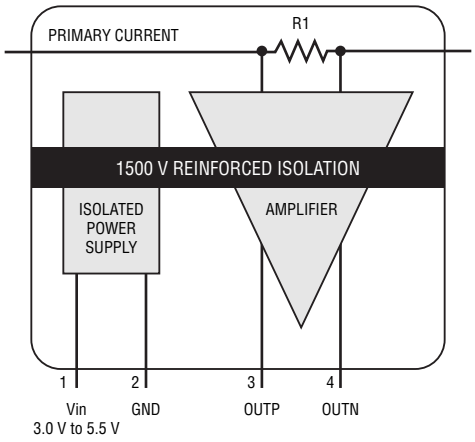

Q: How do I improve the signal to noise ratio (SNR) of the shunt sensor?
A: Oversampling and averaging are two ways to increase SNR and resolution.

Q: Is there a way to convert the differential output to a single-ended output?
A: VCM will be the new zero current point and the output will be offset by this amount. R3, R4, RS set the gain.

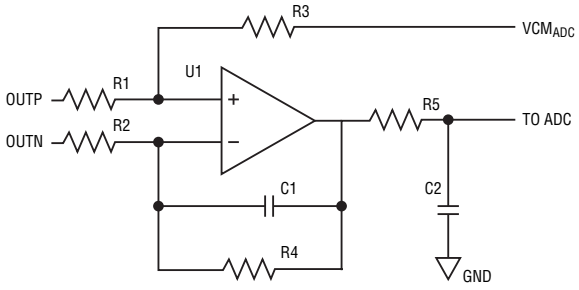

Q: Is there another way to read the differential output with single ended ADCs?
A: The SSA-2 Series outputs have a common mode voltage of about +1.44 VDC referenced to ground. The difference between OUTP and OUTN is the differential voltage. You can use two single-ended ADC channels to measure the OUTP and OUTN voltages referenced to ground and then just subtract the two in software to find the differential voltage. Ideally, you would do a simultaneous measurement, if possible.

For example: If OUTP measures 1.85 V and OUTN measures 1.03 V the differential voltage is 1.85-1.03 = 0.82 V

Q: I notice a high frequency noise on the output signal, why is this?
A: The SSA-2 Series Current Sensor has an output chopper circuit at 625 kHz. This is how we achieve the good DC-accuracy and low temperature drift of offset and gain. Chopping noise is the differential errors (mismatch, etc.) that have been modulated to high frequency to remove them from the baseband. The chopping noise is far above the SSA-2 Series bandwidth of 300 kHz. Use an analog filter to attenuate if necessary, see below.

Q: How do I improve the stability of precision DC current readings?
A: ***Analog Filtering:*** The SSA-2 Series has no internal filtering to maximize its 300 KHz bandwidth for high speed AC measurements. Most applications will operate at much lower frequencies and would benefit greatly from analog filtering, especially for DC signals. A low pass RC filter before the AID converter will improve the signal. Pick the lowest practical filter frequency. Typically one would prioritize lower resistance values and higher capacitances to reduce Johnson noise and output impedance.

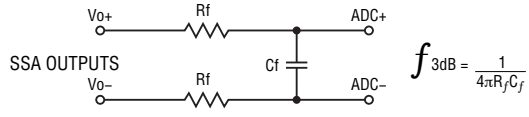

A: ***Digital Filtering:*** The filtering can be done digitally by the CPU. Averaging multiple readings will stabilize the readings at the cost of CPU cycles.

Specifications are subject to change without notice.
Users should verify actual device performance in their specific applications.
The products described herein and this document are subject to specific legal disclaimers as set forth on the last page of this document, and at www.bourns.com/docs/legal/disclaimer.pdf.

Downloaded from Arrow.com.

Frequently Asked Questions (Continued)

Q: I'm getting overshoot on fast rising currents. Why?

A: When using the SSA-2 Series in square wave or pulse applications without filtering, the output will have an excessive amplitude due to the skin effect of the shunt. This will be true with microsecond rise-time currents.

The output of the shunt is inversely proportional to its effective cross-sectional area. For the first couple of microseconds the current is flowing on the surface of the resistance material and not evenly across the whole cross-sectional area like with lower frequency currents. The higher the $\Delta I/\Delta t$, the lower the effective cross-section which results in a higher resistance and a higher output voltage. In under 10 microseconds, the current is flowing through the whole cross-section and the output returns to normal.

The amplitude of the pulse is hard to quantify as it is highly dependent on the rest of the circuit's reactance. Filtering is the usual answer. This can either be placed on the output of the SSA-2 Series Shunt Sensor before the ADC or Bourns can add a filter internally on the sensing side of the electronics. Contact Bourns if this is required.

Current Sensor Cross-section

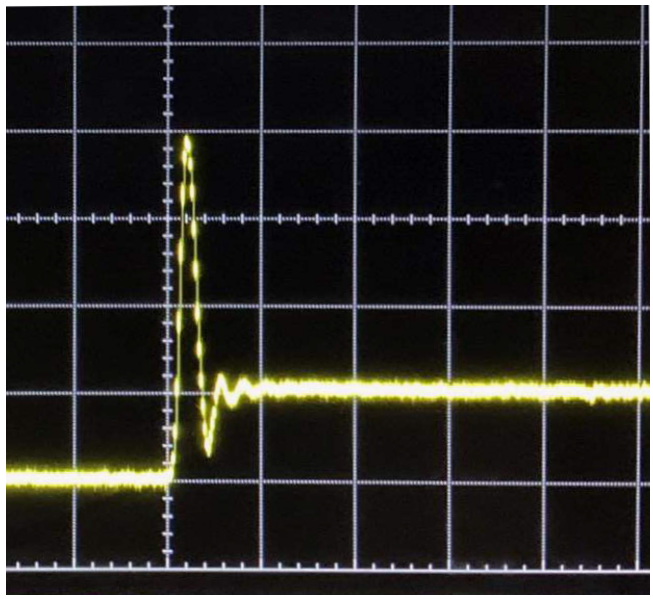

Step response from Fluke 5220A amplifier at 20A square-wave current (no load), 20 μs/div range

Americas: Tel: +1 951-781-5500 • Email: americus@bourns.com
Mexico: Tel: +52-614-478-0400 • Email: mexicus@bourns.com
Asia: Tel: +886-2-2562-4117 • Email: asiacus@bourns.com
EMEA: Tel: +36 88 885 877 • Email: eurocus@bourns.com
www.bourns.com

REV. 02/26

Specifications are subject to change without notice.
Users should verify actual device performance in their specific applications.
The products described herein and this document are subject to specific legal disclaimers as set forth on the last page of this document, and at www.bourns.com/docs/legal/disclaimer.pdf.

Downloaded from Arrow.com.

Legal Disclaimer Notice

BOURNS®

This legal disclaimer applies to purchasers and users of Bourns® products manufactured by or on behalf of Bourns, Inc. and its affiliates (collectively, "Bourns").

Unless otherwise expressly indicated in writing, Bourns® products and data sheets relating thereto are subject to change without notice. Users should check for and obtain the latest relevant information and verify that such information is current and complete before placing orders for Bourns® products.

The characteristics and parameters of a Bourns® product set forth in its data sheet are based on laboratory conditions, and statements regarding the suitability of products for certain "typical" applications are based on Bourns' knowledge of typical requirements in generic applications. Bourns assumes that "typical" applications include failsafe/backup features to address critical risks to users and are designed to allow rework of Bourns® product to avoid scrap of a device solely due to malfunctioning Bourns® product. The characteristics and parameters of a Bourns® product in a user application may vary from the data sheet characteristics and parameters due to (i) the combination of the Bourns® product with other components in the user's application, or (ii) the environment of the user application itself. The characteristics and parameters of a Bourns® product also can and do vary in different applications and actual performance may vary over time. Thus, users should always verify the actual performance of the Bourns® product in their specific devices and applications and make their own independent judgments regarding the suitability of Bourns® product and the amount of additional test margin to design into their device or application to compensate for differences between laboratory and real-world conditions.

Unless Bourns has explicitly designated an individual Bourns® product as meeting the requirements of a particular industry standard (e.g., IATF 16949) or a particular qualification (e.g., UL listed or recognized), Bourns is not responsible for any failure of an individual Bourns® product to meet the requirements of such industry standard or particular qualification even if such industry standard or qualification is a "state of art". Users of Bourns® products are responsible for ensuring compliance with safety-related requirements and standards applicable to their devices or applications.

Bourns® products are not recommended, authorized or intended for use in applications where failure or malfunction may result in personal injury, death, or severe property or environmental damage, such as without limitation nuclear, life-critical medical and certain automotive and aviation applications. Except as set forth in the bullet points below or unless expressly and specifically approved in writing on a case-by-case basis by an authorized Bourns' representative, use of any Bourns® products in such unauthorized high-risk applications is at the user's sole risk.

- Bourns considers implantable/invasive devices and devices/procedures designed as life-supporting or life-sustaining by the U.S. Food and Drug Administration or equivalent organizations outside of the United States as "life-critical" medical applications. Bourns expressly identifies those Bourns® standard products that are suitable for use in typical medical applications that are not life-critical in its publication entitled "Bourns Medical Grade Component Guide."

- Bourns expressly identifies those Bourns® standard products that are suitable for use in typical automotive applications associated with any Automate Safety Integrity Level (ASIL) in its publication entitled "Bourns Automotive Grade Component Guide." Bourns' designation of Bourns® product as compliant with the AEC-Q standard does not by itself mean that Bourns has approved such product for use in an automotive application.

- Bourns expressly identifies Bourns® standard products that are suitable for use in the typical aviation applications/systems requiring System Design Assurance Level (RTCA DO-254 DAL) of C, D or E in its publication entitled "Bourns Civilian Aerospace/Aviation Grade Component Guide." Bourns does not test its products for compliance with United States Federal Aviation Administration standards or any other generally equivalent governmental organization standard applicable to products designed or manufactured for use in aviation applications. Use of Bourns® standard components in aviation applications associated with RTCA DO-254 DAL A or B without proper approval noted above shall be at the user's sole risk.

- Bourns will review and authorize on a case-by-case basis the use of Bourns® standard products which are at least AEC-Q compliant in space-related civil applications (rockets, satellites) with a negotiated cross-waiver and indemnity agreement.

The use and level of testing applicable to Bourns® custom products shall be negotiated on a case-by-case basis by Bourns and the user for which such Bourns® custom products are specially designed. Absent a written agreement between Bourns and the user regarding the use and level of such testing, the above provisions applicable to Bourns® standard products shall also apply to such Bourns® custom products.

Use of Bourns® products or Bourns' technology in military/defense applications must be reviewed with Bourns for compliance with applicable export control laws and embargoes. Users shall not sell, transfer, export or re-export (which includes transfers within a country) any Bourns® products or technology or technical data for use in activities which involve the design, development, production, use or stockpiling of nuclear, chemical or biological weapons or missiles, nor shall they use Bourns® products or technology or technical data in any facility which engages in activities relating to such devices. Further, Bourns® products and Bourns' technology and technical data may not under any circumstance be exported or re-exported to countries subject to international sanctions or embargoes. Bourns® products and technology may not, without prior authorization from Bourns and/or the Government of a country where such product/technology is designed and/or manufactured, be resold, transferred, or re-exported (including within the same country) to any party not eligible to receive commodities, software, and technical data originating in such country.

To the maximum extent permitted by applicable law, Bourns disclaims (i) any and all liability for special, punitive, consequential, incidental or indirect damages or lost revenues or lost profits, and (ii) any and all implied warranties (those not based on parameters specified in Bourns' data sheets and/or specifications), including implied warranties of fitness for particular purpose, non-infringement and merchantability.

For your convenience, copies of this Legal Disclaimer Notice with German, Spanish, Japanese, Traditional Chinese and Simplified Chinese bilingual versions are available at:

Web Page: https://www.bourns.com/legal/disclaimers-terms-and-policies
PDF: https://www.bourns.com/docs/Legal/disclaimer.pdf

Downloaded from Arrow.com.