MODEL NUMBER
142-1721-881

REV 001 MARKUP
ECO 56952
D. CURTIS 2/22/18

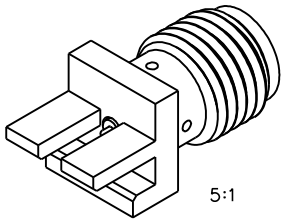

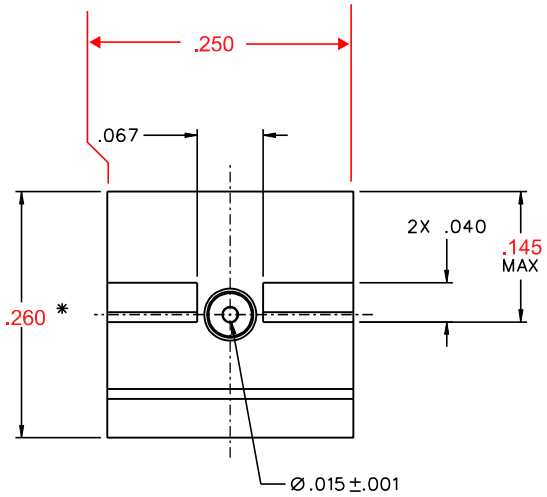

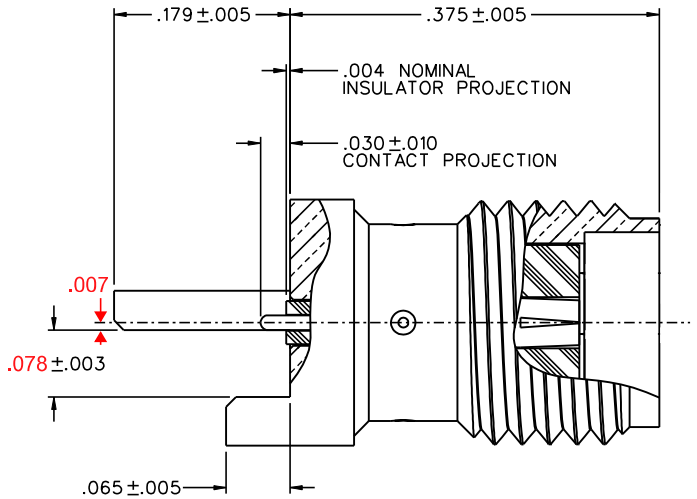

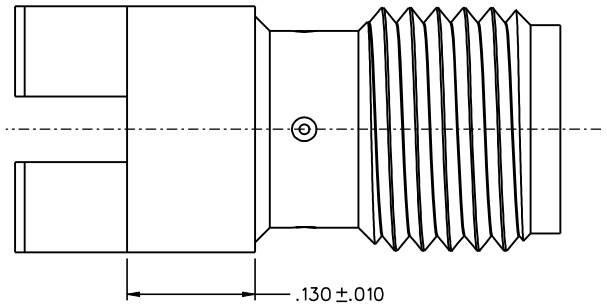

MATERIAL & FINISH:
BODY: GOLD PLATED BRASS
CONTACT: GOLD PLATED BERYLLIUM COPPER
INSULATOR: PTFE (TEFLON)

NOTES:

1. ELECTRICAL:

IMPEDANCE: 50 OHMS
FREQUENCY RANGE: 0-26.5 GHz
VSWR: 1.05+.02F(GHz) MAX AT 0-18 GHz, TYPICALLY < 1.50 AT 18-26.5 GHz
WORKING VOLTAGE: 170 VRMS MAX AT SEA LEVEL
DIELECTRIC WITHSTANDING VOLTAGE: 500 VRMS MIN AT SEA LEVEL
INSULATION RESISTANCE: 1000 MEGOHM MIN
CONTACT RESISTANCE:
CENTER CONTACT - INITIAL 3.0 MILLIOHM MAX, AFTER ENVIRONMENTAL 4.0 MILLIOHM MAX
OUTER CONDUCTOR - INITIAL 2.0 MILLIOHM MAX AFTER ENVIRONMENTAL NOT APPLICABLE
CORONA LEVEL: 125 VOLTS MIN AT 70,000 FEET
~~INSERTION LOSS: NOT APPLICABLE (DEPENDANT UPON APPLICATION)~~
~~RF LEAKAGE: NOT APPLICABLE~~
RF HIGH POTENTIAL WITHSTANDING VOLTAGE: 335 VRMS MIN AT 4 AND 7 MHz

MECHANICAL:

ENGAGE/DISENGAGE TORQUE: 2 INCH-POUNDS MAX
MATING TORQUE: 7-10 INCH POUNDS WHEN BODY SUPPORTED WITH WRENCH #8 INCH POUNDS MAX UNSUPPORTED
CONTACT RETENTION: 6 LBS MIN AXIAL FORCE ON MATING END
4 IN-OZ MIN RADIAL TORQUE
DURABILITY: 500 CYCLES MIN

ENVIRONMENTAL:

(MEETS OR EXCEEDS THE APPLICABLE PARAGRAPH OF MIL-PRF-39012)
THERMAL SHOCK: MIL-STD-202, METHOD 107, CONDITION B, EXCEPT 115°C HIGH TEMP
OPERATING TEMPERATURE: -65 DEG C TO 165 DEG C
CORROSION: MIL-STD-202, METHOD 101, CONDITION B
SHOCK: MIL-STD-202, METHOD 213, CONDITION I
VIBRATION: MIL-STD-202, METHOD 204, CONDITION D
MOISTURE RESISTANCE: MIL-STD-202, METHOD 106

△2. ALL HOLES PLATED THRU ENTIRE CIRCUIT BOARD STACKUP.

△3. HOLE PATTERNS SYMMETRICAL ABOUT CENTER OF CPW TRACE.

4. FOR OPTIMUM CIRCUIT BOARD HIGH FREQUENCY PERFORMANCE:
A. MAINTAIN SOLID GROUND PLANE BELOW HF SUBSTRATE.
B. CONTROL PULLBACK OF TRACE AND GROUND FROM BOARD EDGE.
C. CONTINUE GROUNDED COPLANAR LINE BEYOND GROUND PADS.
D. PLACE 16 MIL DIA GROUND VIAS ON BOTH SIDES OF COPLANAR WAVEGUIDE LINE AT 50 MIL INTERVALS ALONG ENTIRE LENGTH.
E. IMMERSION GOLD PLATE (ENIG) ALL CONDUCTORS PER IPC-4552.

△5. REFERENCE DIMENSIONS FOR 50 OHM GROUNDED CPW LINE, USING ROGERS RO4003, 16 MIL HIGH FREQUENCY CIRCUIT BOARD SUBSTRATE:
TRACE WIDTH = 28.5 MILS
GROUND GAPS = 10 MILS
CONDUCTOR THICKNESS = 1.4 MIL (INCLUDES PLATING)

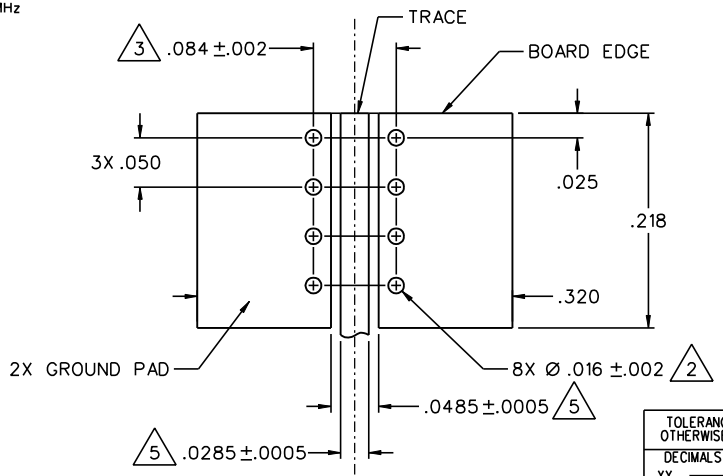

MOUNTING FOOTPRINT
10:1 (TOP VIEW, INCLUDING TRACE DIMENSIONS)

TOLERANCE UNLESS OTHERWISE SPECIFIED	DRAWN BY JRK	DATE 11-3-04	cinch CONNECTIVITY SOLUTIONS a bel group — P.O. Box 1732, Waseca, MN 56093, 1-800-247-8256
DECIMALS / mm	CHECKED BY	DATE	TITLE: HIGH FREQ END LAUNCH SMA JACK ASSEMBLY, EDGE MOUNT, 15 MIL PIN
.XX / .XXX ±.003	APPROVED BY JRK	DATE 12-15-04	
MATL	RELEASE DATE	12-15-04	SHEET 2 OF 2 — DRAWING NO. C – 142-1721-881/890
FINISH	U/M INCH	SCALE 10:1	

Please read our datasheet & drawing disclaimer here.
Downloaded from Arrow.com.