Alle Rechte vorbehalten/ *All rights reserved*

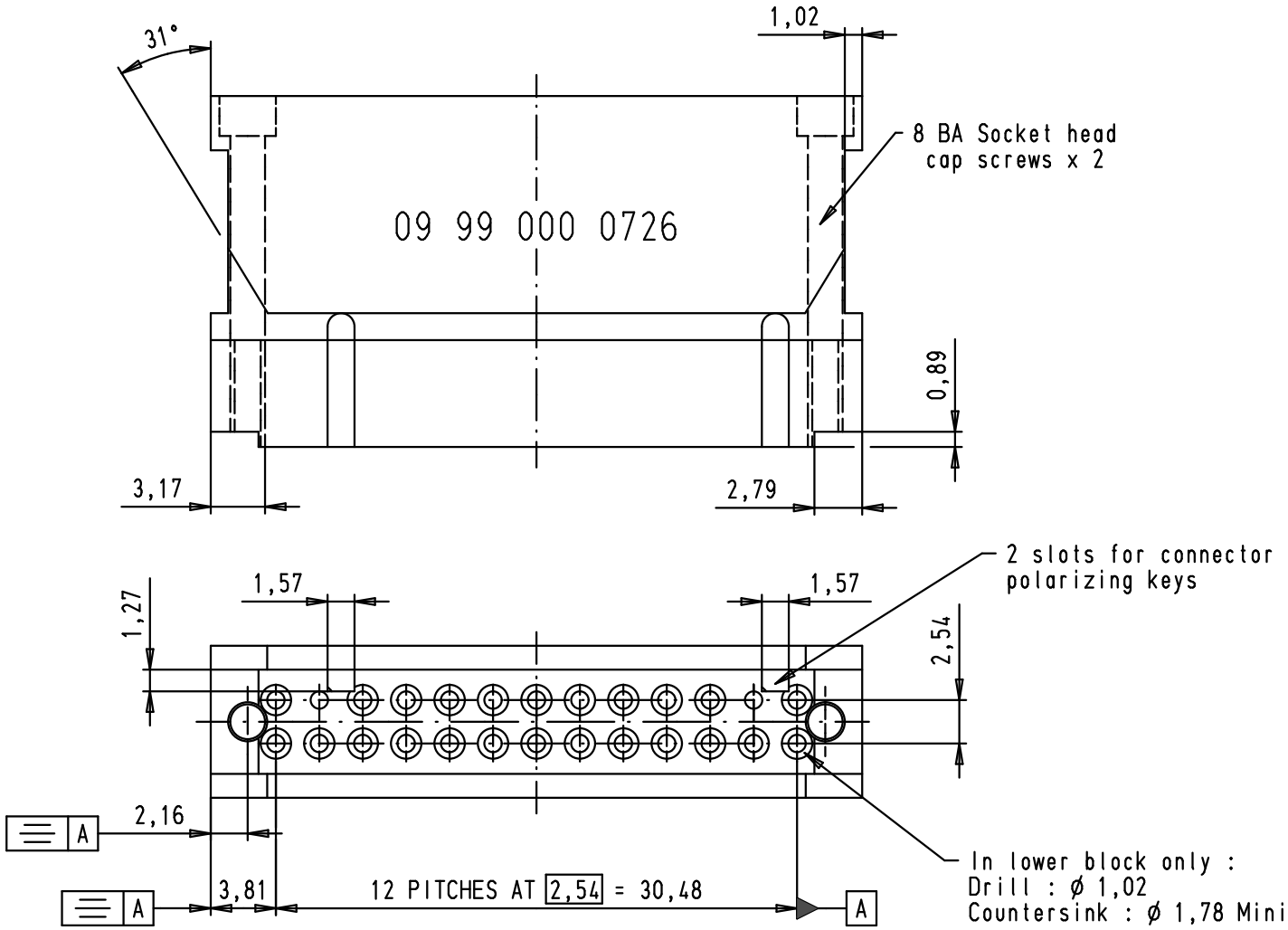

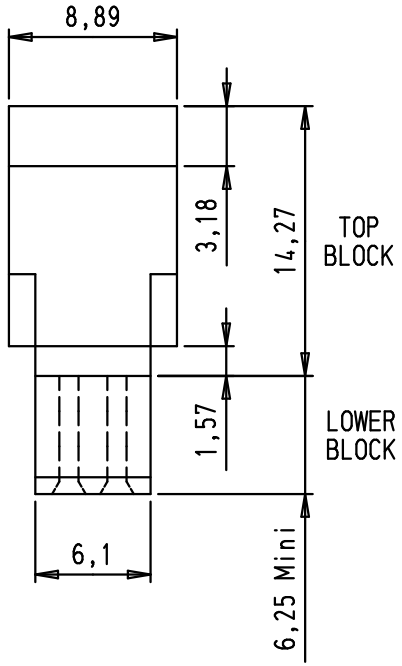

Material: hardened tool steel

BA = British Association Standard Thread

				Dat.	Name			Maßstab/ *Scale*
			Detail.	24/10/06	PK	All Dim. in mm Orig. Size DIN A 4	26 poles press-in top tool insert for SEK male header standard press-in connector	2,5:1
			Insp.					
			Stand.					
33805	24/10/06	PK	HARTING EURL F-95972 Paris				TB 09 99 000 0726	Blatt/ *Page* 1/1
Mod.	Dat.	Name					Sub.	

Downloaded from Arrow.com.