RL78/G23

RENESAS MCU

R01DS0395EJ0140
Rev.1.40
Oct 31, 2025

True low-power platform, 41-μA/MHz operating current, 210-nA data retention current for 4 KB of RAM, up to 768-KB code flash memory and 48-KB RAM, capacitive sensing unit, from 30 to 128 pins, 1.6-5.5 V

1. Outline

1.1 Features

Ultra-low power consumption technology
- V_{DD} = single power supply voltage of 1.6 to 5.5 V
- HALT mode
- STOP mode
  High-speed wakeup from the STOP mode is possible.
- SNOOZE mode

RL78 CPU core
- CISC architecture with 3-stage pipeline
- The minimum instruction execution time can be changed from high to ultra-low speed.
  - High speed: 0.03125 μs at 32-MHz operation with the high-speed on-chip oscillator clock
  - Ultra-low speed: 30.5 μs at 32.768-kHz operation with the subsystem clock
- Multiply/divide/multiply & accumulate instructions are supported.
- Address space: 1 MB
- General-purpose registers:
  (8-bit register × 8) × 4 banks
- On-chip RAM: 12 to 48 KB

Code flash memory
- Code flash memory: 96 to 768 KB
- Block size: 2 KB
- Prohibition of block erase and rewriting (security function)
- On-chip debugging
- Self-programming (with boot swapping and flash shield window)

Data flash memory
- Data flash memory: 8 KB
- Background operation (BGO):
  Instructions can be executed from the program memory while rewriting the data flash memory.
- Number of rewrites: 1,000,000 times (typ.)

High-speed on-chip oscillator
- Selectable from among 32 MHz, 24 MHz, 16 MHz, 12 MHz, 8 MHz, 6 MHz, 4 MHz, 3 MHz, 2 MHz, and 1 MHz
- High accuracy: ±1.0%
  (V_{DD} = 1.8 to 5.5 V, T_A = -20 to +85°C)

Middle-speed on-chip oscillator
- Selectable from among 4 MHz, 2 MHz, and 1 MHz with adjustability

Low-speed on-chip oscillator
- 32.768 kHz (typ.) with adjustability

Operating ambient temperature
- T_A = -40 to +85°C (2D: Consumer applications)
- T_A = -40 to +105°C (3C: Industrial applications)

Power management and reset function
- Power-on-reset circuit (POR)
- Voltage detectors (LVD0 and LVD1)

Data transfer controller (DTC)
- Transfer modes: Normal transfer mode, repeat transfer mode, block transfer mode
- Activation sources: Activated by interrupt sources.
- Chain transfer function

SNOOZE mode sequencer (SMS)
- Calculations and comparison of values by the commands for use in processing by the sequencer can realize intermittent operations where the RL78/G23 does not have to return to normal operation.
- Sequentially handling a total of 32 processes with the use of desired commands from among 21 different ones
- The SNOOZE mode sequencer offers operation with low power consumption without using the CPU, flash memory, and RAM.

Downloaded from Arrow.com.

Logic and event link controller (ELCL)
- Event signals can be set up between specified peripheral functions.
- The signals can be generated by the input of multiple event signals to the logic circuit.
- Flip-flop circuits are incorporated to handle setting and resetting functions.

Serial interface
- Simplified SPI (CSI[Note 1]): 3 to 8 channels
- UART/UART (LIN-bus supported)/UARTA: 3 to 6 channels
- I^2C/Simplified I^2C: 4 to 10 channels

Remote control signal receiver
- 1 channel
- Matching of 4 waveform patterns (header, data 0, data 1, and special data)

Timers
- 16-bit timer: 8 to 16 channels
- 32-bit interval timer:
  1 channel in 32-bit counter mode
  2 channels in 16-bit counter mode
  4 channels in 8-bit counter mode
- Realtime clock: 1 channel (counting of one second to 99 years, alarm interrupt, and clock correction)
- Watchdog timer: 1 channel (operates with the low-speed on-chip oscillator clock)

A/D converter
- 8-/10-/12-bit resolution
- Analog input: 8 to 26 channels
- Internal reference voltage (1.48 V) and temperature sensor

D/A converter
- 8-bit resolution
- Analog output: 2 channels
- Output voltage: 0 V to V_{DD}
- Realtime output function

Comparator
- 2 channels
- Operating modes:
  Comparator high-speed mode and comparator low-speed mode
- The external reference voltage and the internal reference voltage or D/A converter output are selectable as the reference voltage.

Capacitive sensing unit
- Operating voltage condition: V_{DD} = 1.8 to 5.5 V
- Self-capacitance method:
  A single pin configures a single key, supporting up to 32 keys
- Mutual capacitance method:
  Matrix configuration with 8 × 8 pins, supporting up to 64 keys

Input/output port pins
- Number of port pins: 26 to 120
  N-ch open-drain I/O (withstand voltage of 6 V): 2 to 4
  N-ch open-drain I/O (V_{DD} withstand voltage[Note 2]/EV_{DD} withstand voltage[Note 3]): 10 to 33
  Controlled current drive port pins: 6 to 8
- Can be set to N-ch open drain or TTL input buffer, and use of an on-chip pull-up resistor can be specified.
- Connectable to a device with different voltage (1.8, 2.5, or 3 V)

Others
- Key interrupt input
- Clock output/buzzer output controller
- BCD (binary-coded decimal) correction circuit

Note 1. Although the CSI function is generally called SPI, it is also called CSI in this product, so it is referred to as such in this manual.

Note 2. This applies to the 30- to 52-pin products.

Note 3. This applies to the 64- to 128-pin products.

Remark The functions mounted depend on the product. For details, see **1.6 Outline of Functions**.

Downloaded from Arrow.com.

O ROM, RAM capacities

Code flash memory	Data flash memory	RAM	RL78/G23					
			30 pins	32 pins	36 pins	40 pins	44 pins	48 pins
768 KB	8 KB	48 KB	—	—	—	—	R7F100GFN	R7F100GGN
512 KB	8 KB	48 KB	—	—	—	—	R7F100GFL	R7F100GGL
384 KB	8 KB	32 KB	—	—	—	—	R7F100GFK	R7F100GGK
256 KB	8 KB	24 KB	R7F100GAJ	R7F100GBJ	R7F100GCJ	R7F100GEJ	R7F100GFJ	R7F100GGJ
192 KB	8 KB	20 KB	R7F100GAH	R7F100GBH	R7F100GCH	R7F100GEH	R7F100GFH	R7F100GGH
128 KB	8 KB	16 KB	R7F100GAG	R7F100GBG	R7F100GCG	R7F100GEG	R7F100GFG	R7F100GGG
96 KB	8 KB	12 KB	R7F100GAF	R7F100GBF	R7F100GCF	R7F100GEF	R7F100GFF	R7F100GGF

Code flash memory	Data flash memory	RAM	RL78/G23				
			52 pins	64 pins	80 pins	100 pins	128 pins
768 KB	8 KB	48 KB	R7F100GJN	R7F100GLN	R7F100GMN	R7F100GPN	R7F100GSN
512 KB	8 KB	48 KB	R7F100GJL	R7F100GLL	R7F100GML	R7F100GPL	R7F100GSL
384 KB	8 KB	32 KB	R7F100GJK	R7F100GLK	R7F100GMK	R7F100GPK	R7F100GSK
256 KB	8 KB	24 KB	R7F100GJJ	R7F100GLJ	R7F100GMJ	R7F100GPJ	R7F100GSJ
192 KB	8 KB	20 KB	R7F100GJH	R7F100GLH	R7F100GMH	R7F100GPH	—
128 KB	8 KB	16 KB	R7F100GJG	R7F100GLG	R7F100GMG	R7F100GPG	—
96 KB	8 KB	12 KB	R7F100GJF	R7F100GLF	—	—	—

Downloaded from Arrow.com.

1.2 List of Part Numbers

Figure 1 - 1 Part Number, Memory Size, and Package of RL78/G23

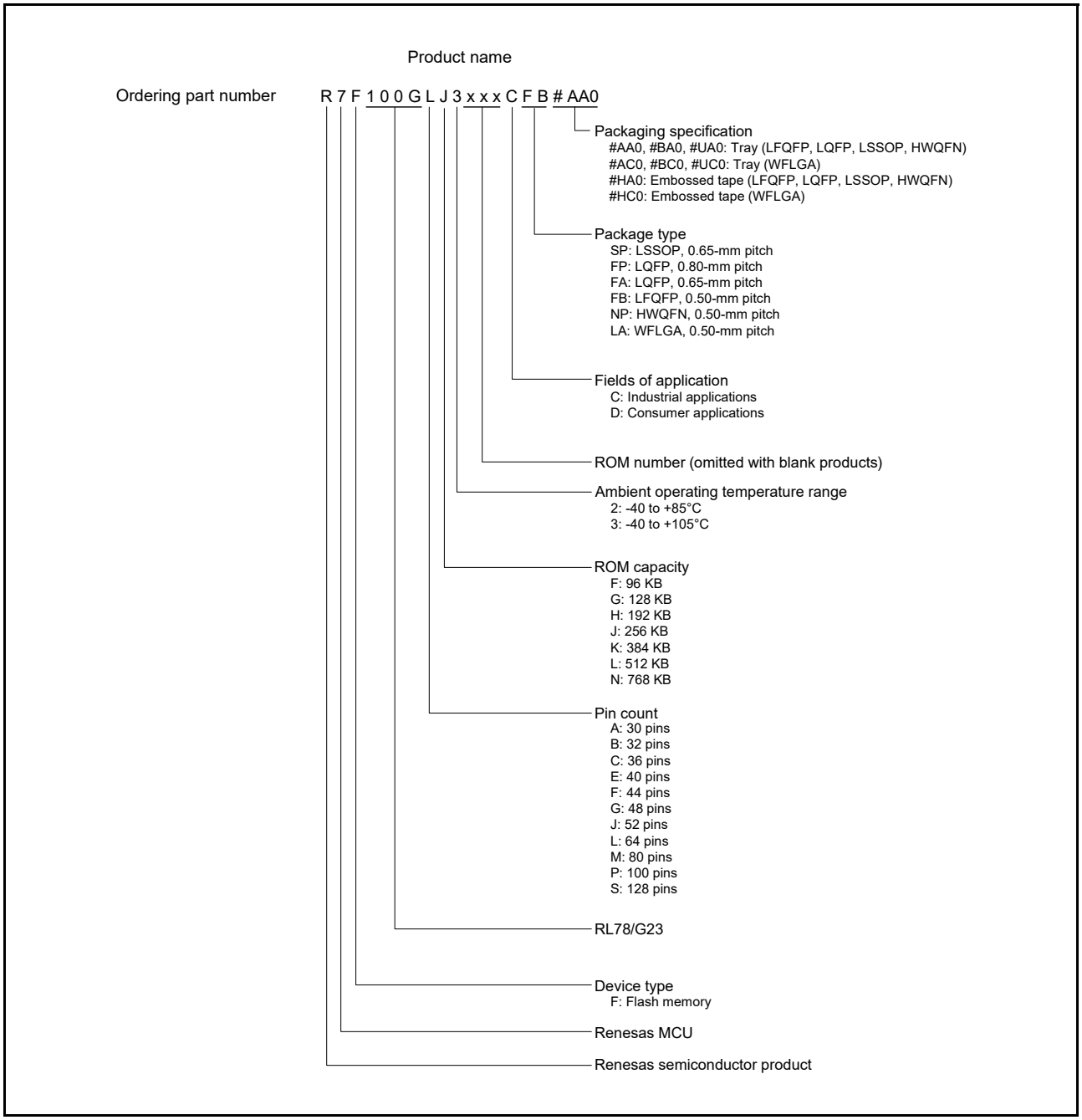

Downloaded from Arrow.com.

Table 1 - 1 List of Ordering Part Numbers (1/3)

Pin count	Package	Fields of Application Note	Ordering Part Number		Renesas Code
			Product Name	Packaging Specification	
30	30-pin plastic LSSOP (7.62 mm (300), 0.65-mm pitch)	C	R7F100GAF3CSP, R7F100GAG3CSP, R7F100GAH3CSP, R7F100GAJ3CSP	#AA0, #BA0, #UA0, #HA0	PLSP0030JB-B
		D	R7F100GAF2DSP, R7F100GAG2DSP, R7F100GAH2DSP, R7F100GAJ2DSP		
32	32-pin plastic HWQFN (5 × 5 mm, 0.5-mm pitch)	C	R7F100GBF3CNP, R7F100GBG3CNP, R7F100GBH3CNP, R7F100GBJ3CNP	#AA0, #BA0, #UA0, #HA0	PWQN0032KE-A
		D	R7F100GBF2DNP, R7F100GBG2DNP, R7F100GBH2DNP, R7F100GBJ2DNP		
	32-pin plastic LQFP (7 × 7 mm, 0.80-mm pitch)	C	R7F100GBF3CFP, R7F100GBG3CFP, R7F100GBH3CFP, R7F100GBJ3CFP	#AA0, #BA0, #UA0, #HA0	PLQP0032GB-A, PLQP0032GE-A
		D	R7F100GBF2DFP, R7F100GBG2DFP, R7F100GBH2DFP, R7F100GBJ2DFP		
36	36-pin plastic WFLGA (4 × 4 mm, 0.50-mm pitch)	C	R7F100GCF3CLA, R7F100GCG3CLA, R7F100GCH3CLA, R7F100GCJ3CLA	#AC0, #BC0, #UC0, #HC0	PWLG0036KB-A
		D	R7F100GCF2DLA, R7F100GCG2DLA, R7F100GCH2DLA, R7F100GCJ2DLA		
40	40-pin plastic HWQFN (6 × 6 mm, 0.50-mm pitch)	C	R7F100GEF3CNP, R7F100GEG3CNP, R7F100GEH3CNP, R7F100GEJ3CNP	#AA0, #BA0, #UA0, #HA0	PWQN0040KD-A
		D	R7F100GEF2DNP, R7F100GEG2DNP, R7F100GEH2DNP, R7F100GEJ2DNP		
44	44-pin plastic LQFP (10 × 10 mm, 0.80-mm pitch)	C	R7F100GFF3CFP, R7F100GFG3CFP, R7F100GFH3CFP, R7F100GFJ3CFP, R7F100GFK3CFP, R7F100GFL3CFP, R7F100GFN3CFP	#AA0, #BA0, #UA0, #HA0	PLQP0044GC-A, PLQP0044GE-A
		D	R7F100GFF2DFP, R7F100GFG2DFP, R7F100GFH2DFP, R7F100GFJ2DFP, R7F100GFK2DFP, R7F100GFL2DFP, R7F100GFN2DFP		
48	48-pin plastic LFQFP (7 × 7 mm, 0.50-mm pitch)	C	R7F100GGF3CFB, R7F100GGG3CFB, R7F100GGH3CFB, R7F100GGJ3CFB, R7F100GGK3CFB, R7F100GGL3CFB, R7F100GGN3CFB	#AA0, #BA0, #UA0, #HA0	PLQP0048KB-B, PLQP0048KL-A
		D	R7F100GGF2DFB, R7F100GGG2DFB, R7F100GGH2DFB, R7F100GGJ2DFB, R7F100GGK2DFB, R7F100GGL2DFB, R7F100GGN2DFB		
	48-pin plastic HWQFN (7 × 7 mm, 0.50-mm pitch)	C	R7F100GGF3CNP, R7F100GGG3CNP, R7F100GGH3CNP, R7F100GGJ3CNP, R7F100GGK3CNP, R7F100GGL3CNP, R7F100GGN3CNP	#AA0, #BA0, #UA0, #HA0	PWQN0048KC-A
		D	R7F100GGF2DNP, R7F100GGG2DNP, R7F100GGH2DNP, R7F100GGJ2DNP, R7F100GGK2DNP, R7F100GGL2DNP, R7F100GGN2DNP		

Downloaded from Arrow.com.

Table 1 - 1 List of Ordering Part Numbers (2/3)

Pin count	Package	Fields of Application Note	Ordering Part Number		Renesas Code
			Product Name	Packaging Specification	
52	52-pin plastic LQFP (10 × 10 mm, 0.65-mm pitch)	C	R7F100GJF3CFA, R7F100GJG3CFA, R7F100GJH3CFA, R7F100GJJ3CFA, R7F100GJK3CFA, R7F100GJL3CFA, R7F100GJN3CFA	#AA0, #BA0, #UA0, #HA0	PLQP0052JA-A
		D	R7F100GJF2DFA, R7F100GJG2DFA, R7F100GJH2DFA, R7F100GJJ2DFA, R7F100GJK2DFA, R7F100GJL2DFA, R7F100GJN2DFA		
64	64-pin plastic LQFP (12 × 12 mm, 0.65-mm pitch)	C	R7F100GLF3CFA, R7F100GLG3CFA, R7F100GLH3CFA, R7F100GLJ3CFA, R7F100GLK3CFA, R7F100GLL3CFA, R7F100GLN3CFA	#AA0, #BA0, #UA0, #HA0	PLQP0064JA-A
		D	R7F100GLF2DFA, R7F100GLG2DFA, R7F100GLH2DFA, R7F100GLJ2DFA, R7F100GLK2DFA, R7F100GLL2DFA, R7F100GLN2DFA		
	64-pin plastic LFQFP (10 × 10 mm, 0.50-mm pitch)	C	R7F100GLF3CFB, R7F100GLG3CFB, R7F100GLH3CFB, R7F100GLJ3CFB, R7F100GLK3CFB, R7F100GLL3CFB, R7F100GLN3CFB	#AA0, #BA0, #UA0, #HA0	PLQP0064KB-C, PLQP0064KL-A
		D	R7F100GLF2DFB, R7F100GLG2DFB, R7F100GLH2DFB, R7F100GLJ2DFB, R7F100GLK2DFB, R7F100GLL2DFB, R7F100GLN2DFB		
	64-pin plastic WFLGA (5 × 5 mm, 0.50-mm pitch)	C	R7F100GLF3CLA, R7F100GLG3CLA, R7F100GLH3CLA, R7F100GLJ3CLA, R7F100GLK3CLA, R7F100GLL3CLA, R7F100GLN3CLA	#AC0, #BC0, #UC0, #HC0	PWLG0064KB-A
		D	R7F100GLF2DLA, R7F100GLG2DLA, R7F100GLH2DLA, R7F100GLJ2DLA, R7F100GLK2DLA, R7F100GLL2DLA, R7F100GLN2DLA		
80	80-pin plastic LQFP (14 × 14 mm, 0.65-mm pitch)	C	R7F100GMG3CFA, R7F100GMH3CFA, R7F100GMJ3CFA, R7F100GMK3CFA, R7F100GML3CFA, R7F100GMN3CFA	#AA0, #BA0, #UA0, #HA0	PLQP0080JA-B
		D	R7F100GMG2DFA, R7F100GMH2DFA, R7F100GMJ2DFA, R7F100GMK2DFA, R7F100GML2DFA, R7F100GMN2DFA		
<R>	80-pin plastic LFQFP (12 × 12 mm, 0.50-mm pitch)	C	R7F100GMG3CFB, R7F100GMH3CFB, R7F100GMJ3CFB, R7F100GMK3CFB, R7F100GML3CFB, R7F100GMN3CFB	#AA0, #BA0, #UA0, #HA0	PLQP0080KB-B, PLQP0080KJ-A
		D	R7F100GMG2DFB, R7F100GMH2DFB, R7F100GMJ2DFB, R7F100GMK2DFB, R7F100GML2DFB, R7F100GMN2DFB		

Downloaded from Arrow.com.

Table 1 - 1 List of Ordering Part Numbers (3/3)

Pin count	Package	Fields of Application Note	Ordering Part Number		Renesas Code
			Product Name	Packaging Specification	
100	100-pin plastic LFQFP (14 × 14 mm, 0.50-mm pitch)	C	R7F100GPG3CFB, R7F100GPH3CFB, R7F100GPJ3CFB, R7F100GPK3CFB, R7F100GPL3CFB, R7F100GPN3CFB	#AA0, #BA0, #UA0, #HA0	PLQP0100KB-B
		D	R7F100GPG2DFB, R7F100GPH2DFB, R7F100GPJ2DFB, R7F100GPK2DFB, R7F100GPL2DFB, R7F100GPN2DFB		
	100-pin plastic LQFP (14 × 20 mm, 0.65-mm pitch)	C	R7F100GPG3CFA, R7F100GPH3CFA, R7F100GPJ3CFA, R7F100GPK3CFA, R7F100GPL3CFA, R7F100GPN3CFA	#AA0, #BA0, #UA0, #HA0	PLQP0100JC-A
		D	R7F100GPG2DFA, R7F100GPH2DFA, R7F100GPJ2DFA, R7F100GPK2DFA, R7F100GPL2DFA, R7F100GPN2DFA		
128	128-pin plastic LFQFP (14 × 20 mm, 0.50-mm pitch)	C	R7F100GSJ3CFB, R7F100GSK3CFB, R7F100GSL3CFB, R7F100GSN3CFB	#AA0, #BA0, #UA0, #HA0	PLQP0128KD-A
		D	R7F100GSJ2DFB, R7F100GSK2DFB, R7F100GSL2DFB, R7F100GSN2DFB		

Note For the fields of application, see **Figure 1 - 1 Part Number, Memory Size, and Package of RL78/G23**.

Downloaded from Arrow.com.

1.3 Pin Configuration (Top View)

1.3.1 30-pin products

- 30-pin plastic LSSOP (7.62 mm (300), 0.65-mm pitch)

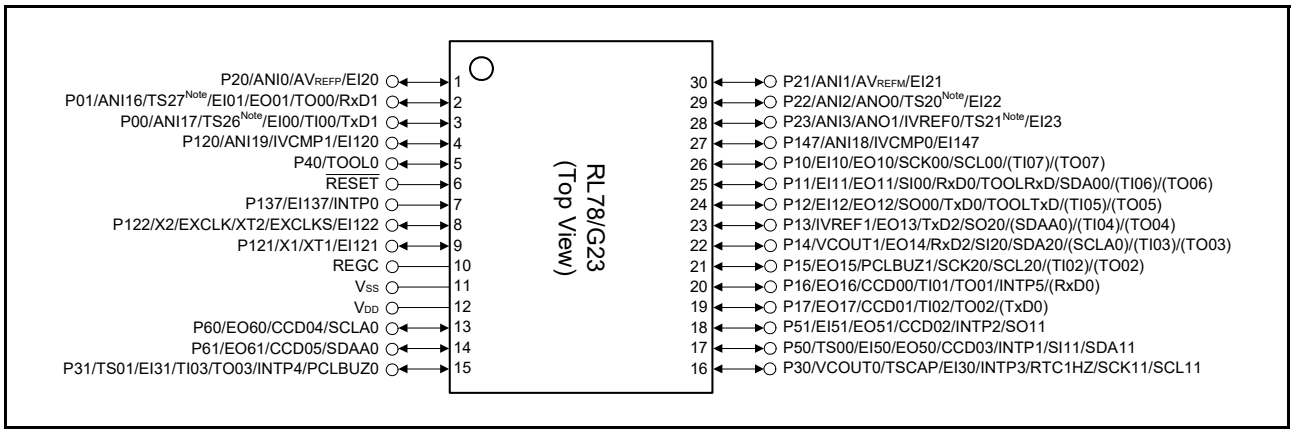

Note Not present in products with 128 or fewer Kbytes of code flash memory.

Caution **Connect the REGC pin to Vss via a capacitor (0.47 to 1 μF).**

Remark 1. For pin identification, see **1.4 Pin Identification**.

Remark 2. Functions in parentheses in the above figure can be assigned via settings in the peripheral I/O redirection register (PIOR). For details, see **4.3.10 Peripheral I/O redirection register (PIOR)** in the RL78/G23 User's Manual.

Downloaded from Arrow.com.

Table 1 - 2 Multiplexed Pin Functions of the 30-pin Products (1/2)

Pin Number	I/O			Power supply, system clock, and debugging	Analog Circuits			HMIs			Timers		Communications Interfaces			
30LSSOP	Digital port	Controlled current drive port	ELCL input/output port		A/D converter (ADC)	D/A converter (DAC)	Comparator (CMP)	Interrupt	Key interrupt	Capacitive sensing unit (CTSU2L)	Timer array unit (TAU)	Realtime Clock (RTC)	Serial array unit (SAU)	Serial interface IICA (IICA)	Serial interface UARTA (UARTA)	Remote control signal receiver (REMC)
1	P20	—	EI20	—	ANI0/ AVREFP	—	—	—	—	—	—	—	—	—	—	—
2	P01	—	EI01/ EO01	—	ANI16	—	—	—	—	TS27 Note	TO00	—	RxD1	—	—	—
3	P00	—	EI00	—	ANI17	—	—	—	—	TS26 Note	TI00	—	TxD1	—	—	—
4	P120	—	EI120	—	ANI19	—	IVCMP1	—	—	—	—	—	—	—	—	—
5	P40	—	—	TOOL0	—	—	—	—	—	—	—	—	—	—	—	—
6	—	—	—	$\overline{\text{RESET}}$	—	—	—	—	—	—	—	—	—	—	—	—
7	P137	—	EI137		—	—	—	INTP0	—	—	—	—	—	—	—	—
8	P122	—	EI122	X2/XT2/ EXCLK/ EXCLKS	—	—	—	—	—	—	—	—	—	—	—	—
9	P121	—	EI121	X1/XT1	—	—	—	—	—	—	—	—	—	—	—	—
10	—	—	—	REGC	—	—	—	—	—	—	—	—	—	—	—	—
11	—	—	—	VSS	—	—	—	—	—	—	—	—	—	—	—	—
12	—	—	—	VDD	—	—	—	—	—	—	—	—	—	—	—	—
13	P60	CCD04	EO60	—	—	—	—	—	—	—	—	—	—	SCLA0	—	—
14	P61	CCD05	EO61	—	—	—	—	—	—	—	—	—	—	SDAA0	—	—
15	P31	—	EI31	PCLBUZ0	—	—	—	INTP4	—	TS01	TI03/ TO03	—	—	—	—	—
16	P30	—	EI30	—	—	—	VCOUT0	INTP3	—	TSCAP	—	RTC1HZ	SCK11/ SCL11	—	—	—
17	P50	CCD03	EI50/ EO50	—	—	—	—	INTP1	—	TS00	—	—	SI11/ SDA11	—	—	—
18	P51	CCD02	EI51/ EO51	—	—	—	—	INTP2	—	—	—	—	SO11	—	—	—
19	P17	CCD01	EO17	—	—	—	—		—	—	TI02/ TO02	—	(TxD0)	—	—	—
20	P16	CCD00	EO16	—	—	—	—	INTP5	—	—	TI01/ TO01	—	(RxD0)	—	—	—
21	P15	—	EO15	PCLBUZ1	—	—	—	—	—	—	(TI02)/ (TO02)	—	SCK20/ SCL20	—	—	—
22	P14	—	EO14	—	—	—	VCOUT1	—	—	—	(TI03)/ (TO03)	—	SI20/ RxD2/ SDA20	(SCLA0)	—	—
23	P13	—	EO13	—	—	—	IVREF1	—	—	—	(TI04)/ (TO04)	—	SO20/ TxD2	(SDAA0)	—	—
24	P12	—	EI12/ EO12	TOOLTxD	—	—	—	—	—	—	(TI05)/ (TO05)	—	SO00/ TxD0	—	—	—
25	P11	—	EI11/ EO11	TOOLRxD	—	—	—	—	—	—	(TI06)/(TO06)	—	SI00/ RxD0/ SDA00	—	—	—
26	P10	—	EI10/ EO10	—	—	—	—	—	—	—	(TI07)/ (TO07)	—	SCK00/ SCL00	—	—	—
27	P147	—	EI147	—	ANI18	—	IVCMP0	—	—	—	—	—	—	—	—	—

Downloaded from Arrow.com.

Table 1 - 2 Multiplexed Pin Functions of the 30-pin Products (2/2)

Pin Number	I/O			Power supply, system clock, and debugging	Analog Circuits			HMIs			Timers		Communications Interfaces			
30LSSOP	Digital port	Controlled current drive port	ELCL input/output port		A/D converter (ADC)	D/A converter (DAC)	Comparator (CMP)	Interrupt	Key interrupt	Capacitive sensing unit (CTSU2L)	Timer array unit (TAU)	Realtime Clock (RTC)	Serial array unit (SAU)	Serial interface IICA (IICA)	Serial interface UARTA (UARTA)	Remote control signal receiver (REMC)
28	P23	—	EI23	—	ANI3	ANO1	IVREF0	—	—	TS21 **Note**	—	—	—	—	—	—
29	P22	—	EI22	—	ANI2	ANO0	—	—	—	TS20 **Note**	—	—	—	—	—	—
30	P21	—	EI21	—	ANI1/ AVREFM	—	—	—	—	—	—	—	—	—	—	—

Note Not present in products with 128 or fewer Kbytes of code flash memory.

Downloaded from Arrow.com.

1.3.2 32-pin products

- 32-pin plastic HWQFN (5 × 5 mm, 0.50-mm pitch)
- 32-pin plastic LQFP (7 × 7 mm, 0.80-mm pitch)

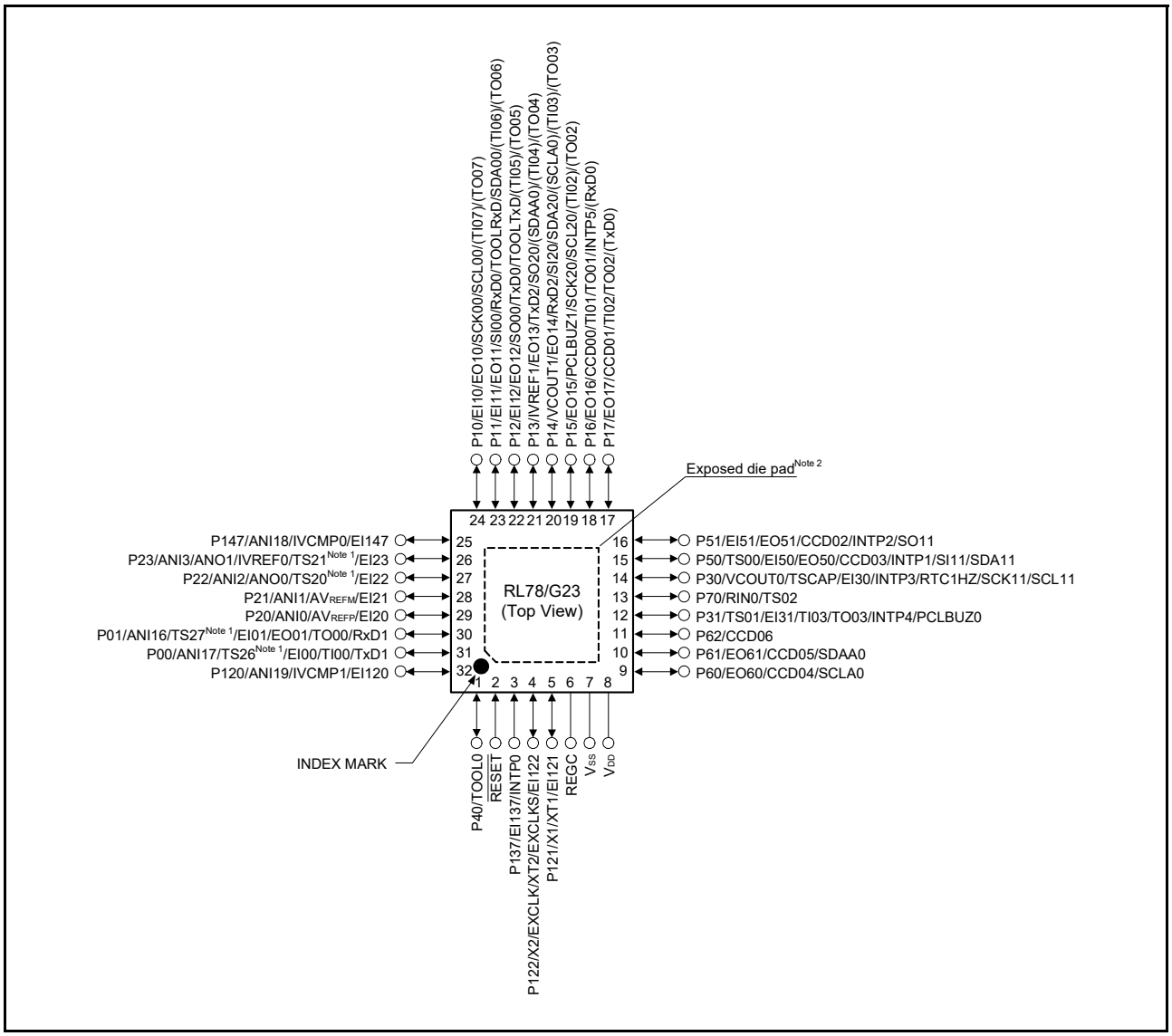

Note 1. Not present in products with 128 or fewer Kbytes of code flash memory.

Note 2. The 32-pin plastic LQFP (7 × 7 mm, 0.80-mm pitch) products do not have an exposed die pad.

Caution **Connect the REGC pin to Vss via a capacitor (0.47 to 1 μF).**

Remark 1. For pin identification, see **1.4 Pin Identification**.

Remark 2. Functions in parentheses in the above figure can be assigned via settings in the peripheral I/O redirection register (PIOR). For details, see 4.3.10 Peripheral I/O redirection register (PIOR) in the RL78/G23 User's Manual.

Remark 3. It is recommended to connect an exposed die pad to Vss.

Downloaded from Arrow.com.

Table 1 - 3 Multiplexed Pin Functions of the 32-pin Products (1/2)

Pin Number	I/O				Analog Circuits			HMIs			Timers		Communications Interfaces			
32HWQFN, 32LQFP	Digital port	Controlled current drive port	ELCL input/output port	Power supply, system clock, and debugging	A/D converter (ADC)	D/A converter (DAC)	Comparator (CMP)	Interrupt	Key interrupt	Capacitive sensing unit (CTSU2L)	Timer array unit (TAU)	Realtime Clock (RTC)	Serial array unit (SAU)	Serial interface IICA (IICA)	Serial interface UARTA (UARTA)	Remote control signal receiver (REMC)
1	P40	—	—	TOOL0	—	—	—	—	—	—	—	—	—	—	—	—
2	—	—	—	$\overline{\text{RESET}}$	—	—	—	—	—	—	—	—	—	—	—	—
3	P137	—	EI137	—	—	—	—	INTP0	—	—	—	—	—	—	—	—
4	P122	—	EI122	X2/XT2/ EXCLK/ EXCLKS	—	—	—	—	—	—	—	—	—	—	—	—
5	P121	—	EI121	X1/XT1	—	—	—	—	—	—	—	—	—	—	—	—
6	—	—	—	REGC	—	—	—	—	—	—	—	—	—	—	—	—
7	—	—	—	V_{SS}	—	—	—	—	—	—	—	—	—	—	—	—
8	—	—	—	V_{DD}	—	—	—	—	—	—	—	—	—	—	—	—
9	P60	CCD04	EO60	—	—	—	—	—	—	—	—	—	—	SCLA0	—	—
10	P61	CCD05	EO61	—	—	—	—	—	—	—	—	—	—	SDAA0	—	—
11	P62	CCD06	—	—	—	—	—	—	—	—	—	—	—	—	—	—
12	P31	—	EI31	PCLBUZ0	—	—	—	INTP4	—	TS01	TI03/ TO03	—	—	—	—	—
13	P70	—	—	—	—	—	—	—	—	TS02	—	—	—	—	—	RIN0
14	P30	—	EI30	—	—	—	VCOUT0	INTP3	—	TSCAP	—	RTC1HZ	SCK11/ SCL11	—	—	—
15	P50	CCD03	EI50/ EO50	—	—	—	—	INTP1	—	TS00	—	—	SI11/ SDA11	—	—	—
16	P51	CCD02	EI51/ EO51	—	—	—	—	INTP2	—	—	—	—	SO11	—	—	—
17	P17	CCD01	EO17	—	—	—	—	—	—	—	TI02/ TO02	—	(TxD0)	—	—	—
18	P16	CCD00	EO16	—	—	—	—	INTP5	—	—	TI01/ TO01	—	(RxD0)	—	—	—
19	P15	—	EO15	PCLBUZ1	—	—	—	—	—	—	(TI02)/ (TO02)	—	SCK20/ SCL20	—	—	—
20	P14	—	EO14	—	—	—	VCOUT1	—	—	—	(TI03)/ (TO03)	—	SI20/ RxD2/ SDA20	(SCLA0)	—	—
21	P13	—	EO13	—	—	—	IVREF1	—	—	—	(TI04)/ (TO04)	—	SO20/ TxD2	(SDAA0)	—	—
22	P12	—	EI12/ EO12	TOOLTxD	—	—	—	—	—	—	(TI05)/ (TO05)	—	SO00/ TxD0	—	—	—
23	P11	—	EI11/ EO11	TOOLRxD	—	—	—	—	—	—	(TI06)/ (TO06)	—	SI00/ RxD0/ SDA00	—	—	—
24	P10	—	EI10/ EO10	—	—	—	—	—	—	—	(TI07)/ (TO07)	—	SCK00/ SCL00	—	—	—
25	P147	—	—	—	ANI18	—	IVCMP0	—	—	—	—	—	—	—	—	—
26	P23	—	EI23	—	ANI3	ANO1	IVREF0	—	—	TS21 Note	—	—	—	—	—	—
27	P22	—	EI22	—	ANI2	ANO0	—	—	—	TS20 Note	—	—	—	—	—	—

Downloaded from Arrow.com.

Table 1 - 3 Multiplexed Pin Functions of the 32-pin Products (2/2)

Pin Number	I/O			Power supply, system clock, and debugging	Analog Circuits			HMIs			Timers		Communications Interfaces			
32HWQFN, 32LQFP	Digital port	Controlled current drive port	ELCL input/output port		A/D converter (ADC)	D/A converter (DAC)	Comparator (CMP)	Interrupt	Key interrupt	Capacitive sensing unit (CTSU2L)	Timer array unit (TAU)	Realtime Clock (RTC)	Serial array unit (SAU)	Serial interface IICA (IICA)	Serial interface UARTA (UARTA)	Remote control signal receiver (REMC)
28	P21	—	EI21	—	ANI1/ AVREFM	—	—	—	—	—	—	—	—	—	—	—
29	P20	—	EI20	—	ANI0/ AVREFP	—	—	—	—	—	—	—	—	—	—	—
30	P01	—	EI01/ EO01	—	ANI16	—	—	—	—	TS27 Note	TO00	—	RxD1	—	—	—
31	P00	—	EI00	—	ANI17	—	—	—	—	TS26 Note	TI00	—	TxD1	—	—	—
32	P120	—	EI120	—	ANI19	—	IVCMP1	—	—	—	—	—	—	—	—	—

Note Not present in products with 128 or fewer Kbytes of code flash memory.

Downloaded from Arrow.com.

1.3.3 36-pin products

- 36-pin plastic WFLGA (4 × 4 mm, 0.50-mm pitch)

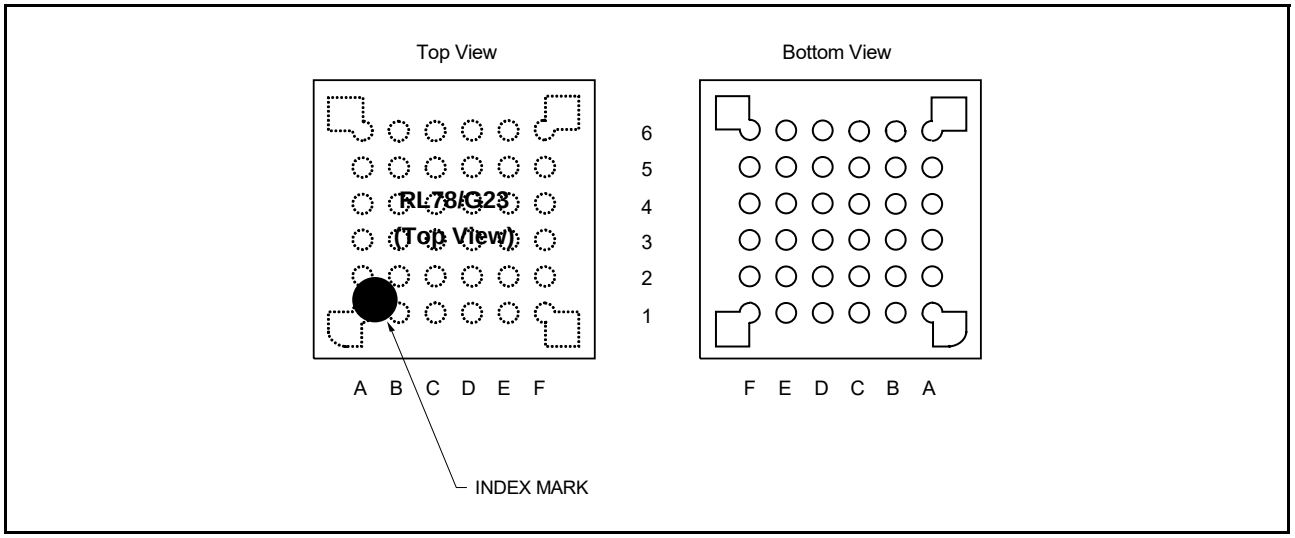

	A	B	C	D	E	F
6	P60/EO60/CCD04/ SCLA0	VDD	P121/X1/XT1/EI121	P122/X2/EXCLK/XT2/ EXCLKS/EI122	P137/EI137/INTP0	P40/TOOL0
5	P62/CCD06	P61/EO61/CCD05/ SDAA0	VSS	REGC	$\overline{\text{RESET}}$	P120/ANI19/IVCMP1/ EI120
4	P72/TS04/SO21/ TxDA0	P71/TS03/SI21/ SDA21/RxDA0	P14/VCOUT1/EO14/ RxD2/SI20/SDA20/ (SCLA0)/(TI03)/ (TO03)	P31/TS01/EI31/TI03/ TO03/INTP4/ PCLBUZ0	P00/TS26[Note]/EI00/ TI00/TxD1	P01/TS27[Note]/EI01/ EO01/TO00/RxD1
3	P50/TS00/EI50/EO50/ CCD03/INTP1/SI11/ SDA11	P70/TS02/RIN0/ SCK21/SCL21	P15/EO15/PCLBUZ1/ SCK20/SCL20/ (TI02)/(TO02)	P22/ANI2/ANO0/ TS20[Note]/EI22	P20/ANI0/AVREFP/ EI20	P21/ANI1/AVREFM/ EI21
2	P30/VCOUT0/TSCAP/ EI30/INTP3/RTC1HZ/ SCK11/SCL11	P16/EO16/CCD00/ TI01/TO01/INTP5/ (RxD0)	P12/EI12/EO12/SO00/ TxD0/TOOLTxD/ (TI05)/(TO05)	P11/EI11/EO11/SI00/ RxD0/TOOLRxD/ SDA00/(TI06)/(TO06)	P24/ANI4/TS22[Note]	P23/ANI3/ANO1/ IVREF0/TS21[Note]/ EI23
1	P51/EI51/EO51/ CCD02/INTP2/ SO11	P17/EO17/CCD01/ TI02/TO02/(TxD0)	P13/IVREF1/EO13/ TxD2/SO20/(SDAA0)/ (TI04)/(TO04)	P10/EI10/EO10/ SCK00/SCL00/ (TI07)/(TO07)	P147/ANI18/IVCMP0/ EI147	P25/ANI5/TS23[Note]

Note Not present in products with 128 or fewer Kbytes of code flash memory.

Caution **Connect the REGC pin to Vss via a capacitor (0.47 to 1 μF).**

Remark 1. For pin identification, see **1.4 Pin Identification**.

Remark 2. Functions in parentheses in the above figure can be assigned via settings in the peripheral I/O redirection register (PIOR). For details, see **4.3.10 Peripheral I/O redirection register (PIOR)** in the RL78/G23 User's Manual.

Downloaded from Arrow.com.

Table 1 - 4 Multiplexed Pin Functions of the 36-pin Products (1/2)

Pin Number	I/O			Power supply, system clock, and debugging	Analog Circuits			HMIs			Timers		Communications Interfaces			
36WFLGA	Digital port	Controlled current drive port	ELCL input/output port		A/D converter (ADC)	D/A converter (DAC)	Comparator (CMP)	Interrupt	Key interrupt	Capacitive sensing unit (CTSU2L)	Timer array unit (TAU)	Realtime Clock (RTC)	Serial array unit (SAU)	Serial interface IICA (IICA)	Serial interface UARTA (UARTA)	Remote control signal receiver (REMC)
A1	P51	CCD02	EI51/ EO51	—	—	—	—	INTP2	—	—	—	—	SO11	—	—	—
A2	P30	—	EI30	—	—	—	VCOUT0	INTP3	—	TSCAP	—	RTC1HZ	SCK11/ SCL11	—	—	—
A3	P50	CCD03	EI50/ EO50	—	—	—	—	INTP1	—	TS00	—	—	SI11/ SDA11	—	—	—
A4	P72	—	—	—	—	—	—	—	—	TS04	—	—	SO21	—	TxDA0	—
A5	P62	CCD06	—	—	—	—	—	—	—	—	—	—	—	—	—	—
A6	P60	CCD04	EO60	—	—	—	—	—	—	—	—	—	—	SCLA0	—	—
B1	P17	CCD01	EO17	—	—	—	—	—	—	—	TI02/ TO02	—	(TxD0)	—	—	—
B2	P16	CCD00	EO16	—	—	—	—	INTP5	—	—	TI01/ TO01	—	(RxD0)	—	—	—
B3	P70	—	—	—	—	—	—	—	—	TS02	—	—	SCK21/ SCL21	—	—	RIN0
B4	P71	—	—	—	—	—	—	—	—	TS03	—	—	SI21/ SDA21	—	RxDA0	—
B5	P61	CCD05	EO61	—	—	—	—	—	—	—	—	—	—	SDAA0	—	—
B6	—	—	—	V_{DD}	—	—	—	—	—	—	—	—	—	—	—	—
C1	P13	—	EO13	—	—	—	IVREF1	—	—	—	(TI04)/ (TO04)	—	SO20/ TxD2	(SDAA0)	—	—
C2	P12	—	EI12/ EO12	TOOLTxD	—	—	—	—	—	—	(TI05)/ (TO05)	—	SO00/ TxD0	—	—	—
C3	P15	—	EO15	PCLBUZ1	—	—	—	—	—	—	(TI02)/ (TO02)	—	SCK20/ SCL20	—	—	—
C4	P14	—	EO14	—	—	—	VCOUT1	—	—	—	(TI03)/ (TO03)	—	SI20/ RxD2/ SDA20	(SCLA0)	—	—
C5	—	—	—	Vss	—	—	—	—	—	—	—	—	—	—	—	—
C6	P121	—	EI121	X1/XT1	—	—	—	—	—	—	—	—	—	—	—	—
D1	P10	—	EI10/ EO10	—	—	—	—	—	—	—	(TI07)/ (TO07)	—	SCK00/ SCL00	—	—	—
D2	P11	—	EI11/ EO11	TOOLRxD	—	—	—	—	—	—	(TI06)/ (TO06)	—	SI00/ RxD0/ SDA00	—	—	—
D3	P22	—	EI22	—	ANI2	ANO0	—	—	—	TS20 Note	—	—	—	—	—	—
D4	P31	—	EI31	PCLBUZ0	—	—	—	INTP4	—	TS01	TI03/ TO03	—	—	—	—	—
D5	—	—	—	REGC	—	—	—	—	—	—	—	—	—	—	—	—
D6	P122	—	EI122	X2/XT2/ EXCLK/ EXCLKS	—	—	—	—	—	—	—	—	—	—	—	—
E1	P147	—	EI147	—	ANI18	—	IVCMP0	—	—	—	—	—	—	—	—	—
E2	P24	—	—	—	ANI4	—	—	—	—	TS22 Note	—	—	—	—	—	—

Downloaded from Arrow.com.

Table 1 - 4 Multiplexed Pin Functions of the 36-pin Products (2/2)

Pin Number	I/O			Power supply, system clock, and debugging	Analog Circuits			HMIs			Timers		Communications Interfaces			
36WFLGA	Digital port	Controlled current drive port	ELCL input/output port		A/D converter (ADC)	D/A converter (DAC)	Comparator (CMP)	Interrupt	Key interrupt	Capacitive sensing unit (CTSU2L)	Timer array unit (TAU)	Realtime Clock (RTC)	Serial array unit (SAU)	Serial interface IICA (IICA)	Serial interface UARTA (UARTA)	Remote control signal receiver (REMC)
E3	P20	—	EI20	—	ANI0/ AVREFP	—	—	—	—	—	—	—	—	—	—	—
E4	P00	—	EI00	—	—	—	—	—	—	TS26 **Note**	TI00	—	TxD1	—	—	—
E5	—	—	—	$\overline{\text{RESET}}$	—	—	—	—	—	—	—	—	—	—	—	—
E6	P137	—	EI137	—	—	—	—	INTP0	—	—	—	—	—	—	—	—
F1	P25	—	—	—	ANI5	—	—	—	—	TS23 **Note**	—	—	—	—	—	—
F2	P23	—	EI23	—	ANI3	ANO1	IVREF0	—	—	TS21 **Note**	—	—	—	—	—	—
F3	P21	—	EI21	—	ANI1/ AVREFM	—	—	—	—	—	—	—	—	—	—	—
F4	P01	—	EI01/ EO01	—	—	—	—	—	—	TS27 **Note**	TO00	—	RxD1	—	—	—
F5	P120	—	EI120	—	ANI19	—	IVCMP1	—	—	—	—	—	—	—	—	—
F6	P40	—	—	TOOL0	—	—	—	—	—	—	—	—	—	—	—	—

Note Not present in products with 128 or fewer Kbytes of code flash memory.

Downloaded from Arrow.com.

1.3.4 40-pin products

- 40-pin plastic HWQFN (6 × 6 mm, 0.50-mm pitch)

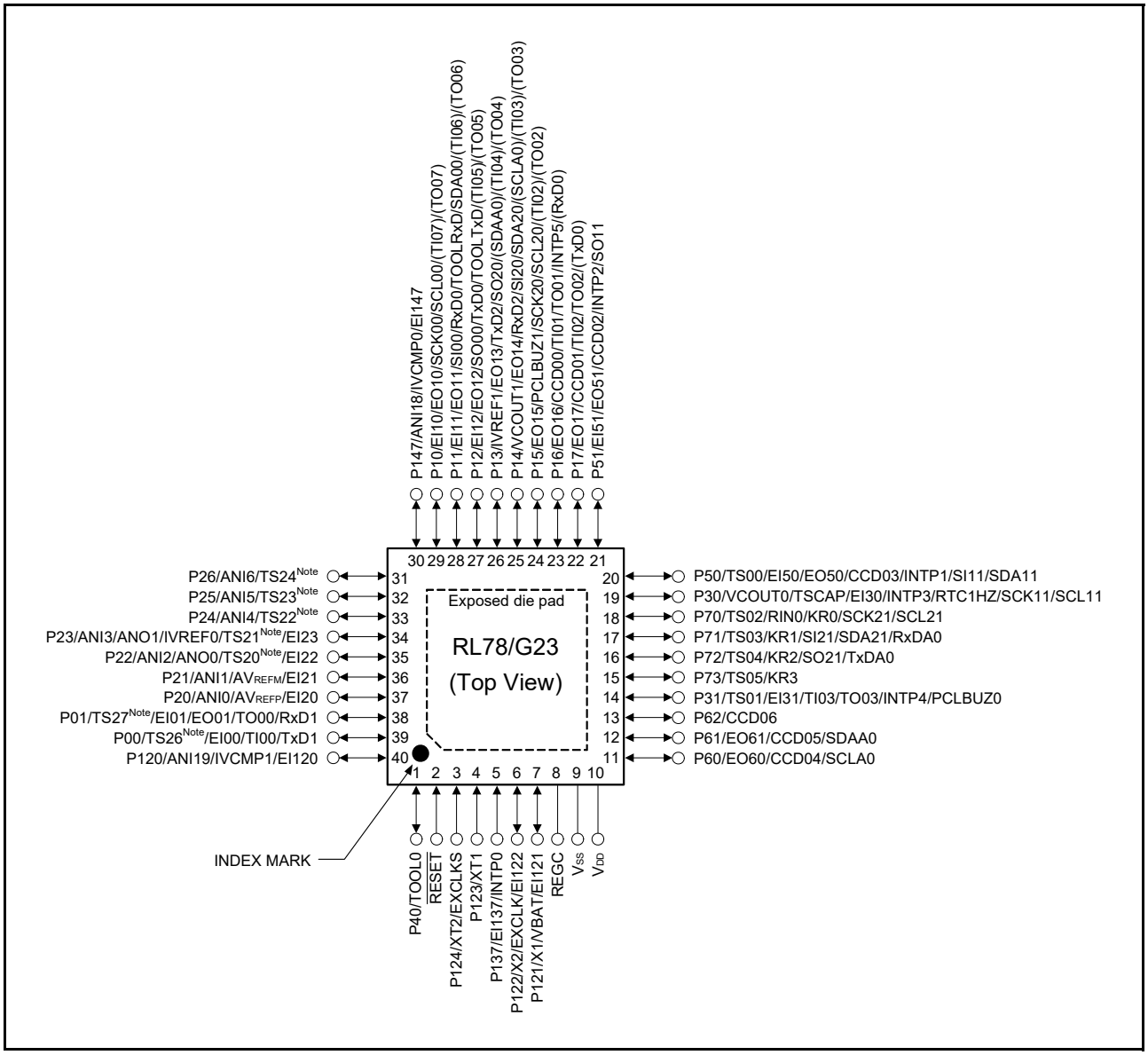

Note Not present in products with 128 or fewer Kbytes of code flash memory.

Caution **Connect the REGC pin to Vss via a capacitor (0.47 to 1 μF).**

Remark 1. For pin identification, see **1.4 Pin Identification**.

Remark 2. Functions in parentheses in the above figure can be assigned via settings in the peripheral I/O redirection register (PIOR). For details, see **4.3.10 Peripheral I/O redirection register (PIOR)** in the RL78/G23 User's Manual.

Remark 3. It is recommended to connect an exposed die pad to Vss.

Downloaded from Arrow.com.

Table 1 - 5 Multiplexed Pin Functions of the 40-pin Products (1/2)

Pin Number	I/O			Power supply, system clock, and debugging	Analog Circuits			HMIs			Timers		Communications Interfaces			
40HWQFN	Digital port	Controlled current drive port	ELCL input/output port		A/D converter (ADC)	D/A converter (DAC)	Comparator (CMP)	Interrupt	Key interrupt	Capacitive sensing unit (CTSU2L)	Timer array unit (TAU)	Realtime Clock (RTC)	Serial array unit (SAU)	Serial interface IICA (IICA)	Serial interface UARTA (UARTA)	Remote control signal receiver (REMC)
1	P40	—	—	TOOL0	—	—	—	—	—	—	—	—	—	—	—	—
2	—	—	—	$\overline{\text{RESET}}$	—	—	—	—	—	—	—	—	—	—	—	—
3	P124	—	—	XT2/ EXCLKS	—	—	—	—	—	—	—	—	—	—	—	—
4	P123	—	—	XT1	—	—	—	—	—	—	—	—	—	—	—	—
5	P137	—	EI137	—	—	—	—	INTP0	—	—	—	—	—	—	—	—
6	P122	—	EI122	X2/EXCLK	—	—	—	—	—	—	—	—	—	—	—	—
7	P121	—	EI121	X1/VBAT	—	—	—	—	—	—	—	—	—	—	—	—
8	—	—	—	REGC	—	—	—	—	—	—	—	—	—	—	—	—
9	—	—	—	V_{SS}	—	—	—	—	—	—	—	—	—	—	—	—
10	—	—	—	V_{DD}	—	—	—	—	—	—	—	—	—	—	—	—
11	P60	CCD04	EO60	—	—	—	—	—	—	—	—	—	—	SCLA0	—	—
12	P61	CCD05	EO61	—	—	—	—	—	—	—	—	—	—	SDAA0	—	—
13	P62	CCD06	—	—	—	—	—	—	—	—	—	—	—	—	—	—
14	P31	—	EI31	PCLBUZ0	—	—	—	INTP4	—	TS01	TI03/ TO03	—	—	—	—	—
15	P73	—	—	—	—	—	—	—	KR3	TS05	—	—	—	—	—	—
16	P72	—	—	—	—	—	—	—	KR2	TS04	—	—	SO21	—	TxDA0	—
17	P71	—	—	—	—	—	—	—	KR1	TS03	—	—	SI21/ SDA21	—	RxDA0	—
18	P70	—	—	—	—	—	—	—	KR0	TS02	—	—	SCK21/ SCL21	—	—	RIN0
19	P30	—	EI30	—	—	—	VCOUT0	INTP3	—	TSCAP	—	RTC1HZ	SCK11/ SCL11	—	—	—
20	P50	CCD03	EI50/ EO50	—	—	—	—	INTP1	—	TS00	—	—	SI11/ SDA11	—	—	—
21	P51	CCD02	EI51/ EO51	—	—	—	—	INTP2	—	—	—	—	SO11	—	—	—
22	P17	CCD01	EO17	—	—	—	—	—	—	—	TI02/ TO02	—	(TxD0)	—	—	—
23	P16	CCD00	EO16	—	—	—	—	INTP5	—	—	TI01/ TO01	—	(RxD0)	—	—	—
24	P15	—	EO15	PCLBUZ1	—	—	—	—	—	—	(TI02)/ (TO02)	—	SCK20/ SCL20	—	—	—
25	P14	—	EO14	—	—	—	VCOUT1	—	—	—	(TI03)/ (TO03)	—	SI20/ xD2/ SDA20	(SCLA0)	—	—
26	P13	—	EO13	—	—	—	IVREF1	—	—	—	(TI04)/ (TO04)	—	SO20/ TxD2	(SDAA0)	—	—
27	P12	—	EI12/ EO12	TOOLTxD	—	—	—	—	—	—	(TI05)/ (TO05)	—	SO00/ TxD0	—	—	—
28	P11	—	EI11/ EO11	TOOLRxD	—	—	—	—	—	—	(TI06)/ (TO06)	—	SI00/ RxD0/ SDA00	—	—	—

Downloaded from Arrow.com.

Table 1 - 5 Multiplexed Pin Functions of the 40-pin Products (2/2)

Pin Number	I/O			Power supply, system clock, and debugging	Analog Circuits			HMIs			Timers		Communications Interfaces			
40HWQFN	Digital port	Controlled current drive port	ELCL input/output port		A/D converter (ADC)	D/A converter (DAC)	Comparator (CMP)	Interrupt	Key interrupt	Capacitive sensing unit (CTSU2L)	Timer array unit (TAU)	Realtime Clock (RTC)	Serial array unit (SAU)	Serial interface IICA (IICA)	Serial interface UARTA (UARTA)	Remote control signal receiver (REMC)
29	P10	—	EI10/ EO10	—	—	—	—	—	—	—	(TI07)/ (TO07)	—	SCK00/ SCL00	—	—	—
30	P147	—	EI147	—	ANI18	—	IVCMP0	—	—	—	—	—	—	—	—	—
31	P26	—	—	—	ANI6	—	—	—	—	TS24 **Note**	—	—	—	—	—	—
32	P25	—	—	—	ANI5	—	—	—	—	TS23 **Note**	—	—	—	—	—	—
33	P24	—	—	—	ANI4	—	—	—	—	TS22 **Note**	—	—	—	—	—	—
34	P23	—	EI23	—	ANI3	ANO1	IVREF0	—	—	TS21 **Note**	—	—	—	—	—	—
35	P22	—	EI22	—	ANI2	ANO0	—	—	—	TS20 **Note**	—	—	—	—	—	—
36	P21	—	EI21	—	ANI1/ AVREFM	—	—	—	—	—	—	—	—	—	—	—
37	P20	—	EI20	—	ANI0/ AVREFP	—	—	—	—	—	—	—	—	—	—	—
38	P01	—	EI01/ EO01	—	—	—	—	—	—	TS27 **Note**	TO00	—	RxD1	—	—	—
39	P00	—	EI00	—	—	—	—	—	—	TS26 **Note**	TI00	—	TxD1	—	—	—
40	P120	—	EI120	—	ANI19	—	IVCMP1	—	—	—	—	—	—	—	—	—

Note Not present in products with 128 or fewer Kbytes of code flash memory.

Downloaded from Arrow.com.

1.3.5 44-pin products

- 44-pin plastic LQFP (10 × 10 mm, 0.80-mm pitch)

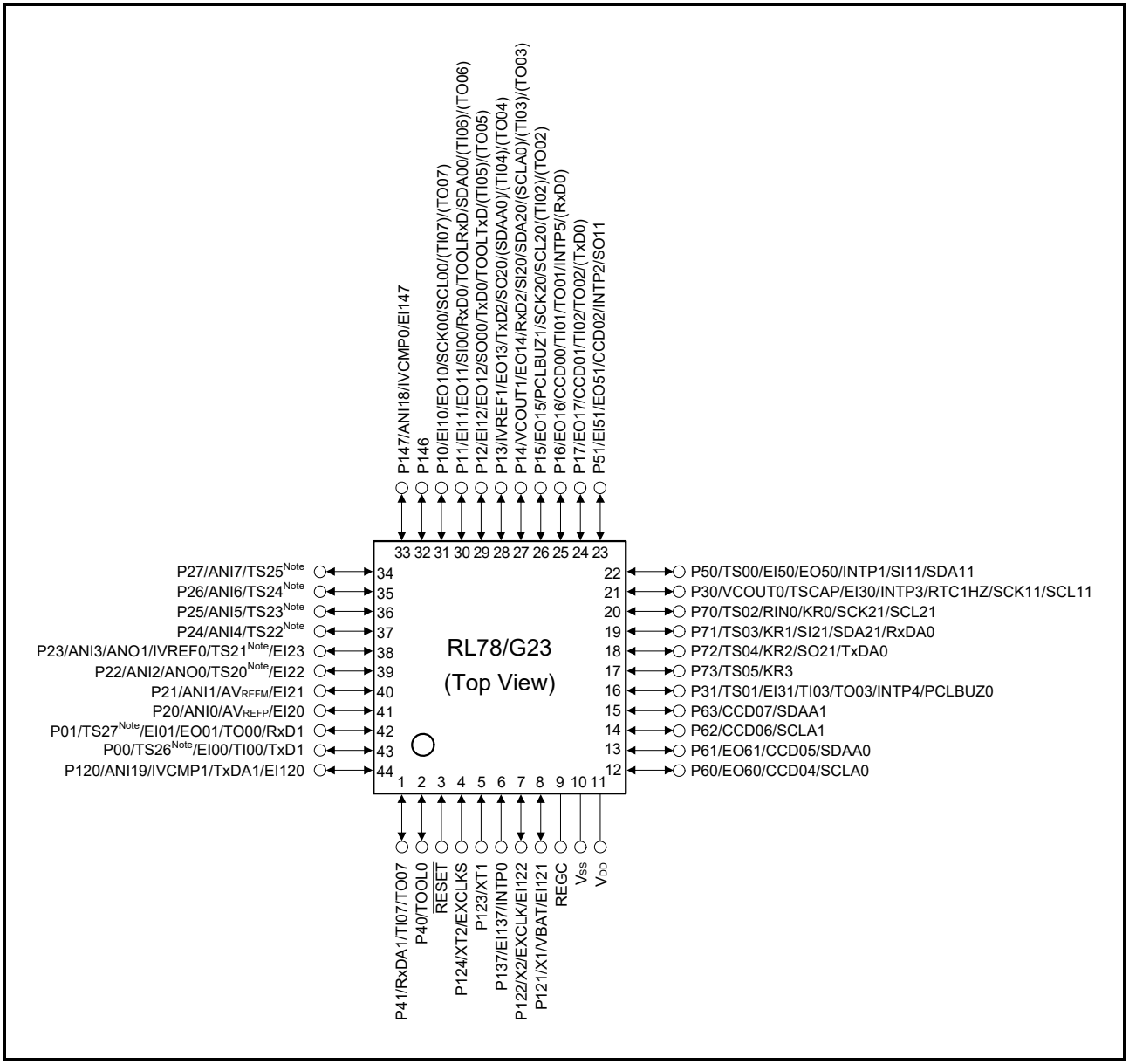

Note Not present in products with 128 or fewer Kbytes of code flash memory.

Caution **Connect the REGC pin to Vss via a capacitor (0.47 to 1 μF).**

Remark 1. For pin identification, see **1.4 Pin Identification**.

Remark 2. Functions in parentheses in the above figure can be assigned via settings in the peripheral I/O redirection register (PIOR). For details, see **4.3.10 Peripheral I/O redirection register (PIOR)** in the RL78/G23 User's Manual.

Downloaded from Arrow.com.

Table 1 - 6 Multiplexed Pin Functions of the 44-pin Products (1/2)

Pin Number	I/O			Power supply, system clock, and debugging	Analog Circuits			HMIs			Timers		Communications Interfaces			
44LQFP	Digital port	Controlled current drive port	ELCL input/output port		A/D converter (ADC)	D/A converter (DAC)	Comparator (CMP)	Interrupt	Key interrupt	Capacitive sensing unit (CTSU2L)	Timer array unit (TAU)	Realtime Clock (RTC)	Serial array unit (SAU)	Serial interface IICA (IICA)	Serial interface UARTA (UARTA)	Remote control signal receiver (REMC)
1	P41	—	—	—	—	—	—	—	—	—	TI07/ TO07	—	—	—	RxDA1	—
2	P40	—	—	TOOL0	—	—	—	—	—	—	—	—	—	—	—	—
3	—	—		$\overline{\text{RESET}}$	—	—	—	—	—	—	—	—	—	—	—	—
4	P124	—	—	XT2/ EXCLKS	—	—	—	—	—	—	—	—	—	—	—	—
5	P123	—	—	XT1	—	—	—	—	—	—	—	—	—	—	—	—
6	P137	—	EI137	—	—	—	—	INTP0	—	—	—	—	—	—	—	—
7	P122	—	EI122	X2/EXCLK	—	—	—	—	—	—	—	—	—	—	—	—
8	P121	—	EI121	X1/VBAT	—	—	—	—	—	—	—	—	—	—	—	—
9	—	—	—	REGC	—	—	—	—	—	—	—	—	—	—	—	—
10	—	—	—	V_{SS}	—	—	—	—	—	—	—	—	—	—	—	—
11	—	—	—	V_{DD}	—	—	—	—	—	—	—	—	—	—	—	—
12	P60	CCD04	EO60	—	—	—	—	—	—	—	—	—	—	SCLA0	—	—
13	P61	CCD05	EO61	—	—	—	—	—	—	—	—	—	—	SDAA0	—	—
14	P62	CCD06	—	—	—	—	—	—	—	—	—	—	—	SCLA1	—	—
15	P63	CCD07	—	—	—	—	—	—	—	—	—	—	—	SDAA1	—	—
16	P31	—	EI31	PCLBUZ0	—	—	—	INTP4	—	TS01	TI03/ TO03	—	—	—	—	—
17	P73	—	—	—	—	—	—	—	KR3	TS05	—	—	—	—	—	—
18	P72	—	—	—	—	—	—	—	KR2	TS04	—	—	SO21	—	TxDA0	—
19	P71	—	—	—	—	—	—	—	KR1	TS03	—	—	SI21/ SDA21	—	RxDA0	—
20	P70	—	—	—	—	—	—	—	KR0	TS02	—	—	SCK21/ SCL21	—	—	RIN0
21	P30	—	EI30	—	—	—	VCOUT0	INTP3	—	TSCAP	—	RTC1HZ	SCK11/ SCL11	—	—	—
22	P50	—	EI50/ EO50	—	—	—	—	INTP1	—	TS00	—	—	SI11/ SDA11	—	—	—
23	P51	CCD02	EI51/ EO51	—	—	—	—	INTP2	—	—	—	—	SO11	—	—	—
24	P17	CCD01	EO17	—	—	—	—		—	—	TI02/ TO02	—	(TxD0)	—	—	—
25	P16	CCD00	EO16	—	—	—	—	INTP5	—	—	TI01/ TO01	—	(RxD0)	—	—	—
26	P15	—	EO15	PCLBUZ1	—	—	—	—	—	—	(TI02)/ (TO02)	—	SCK20/ SCL20	—	—	—
27	P14	—	EO14	—	—	—	VCOUT1	—	—	—	(TI03)/ (TO03)	—	SI20/ RxD2/ SDA20	(SCLA0)	—	—
28	P13	—	EO13	—	—	—	IVREF1	—	—	—	(TI04)/ (TO04)	—	SO20/ TxD2	(SDAA0)	—	—
29	P12	—	EI12/ EO12	TOOLTxD	—	—	—	—	—	—	(TI05)/ (TO05)	—	SO00/ TxD0	—	—	—

Downloaded from Arrow.com.

Table 1 - 6 Multiplexed Pin Functions of the 44-pin Products (2/2)

Pin Number	I/O			Power supply, system clock, and debugging	Analog Circuits			HMIs			Timers		Communications Interfaces			
44LQFP	Digital port	Controlled current drive port	ELCL input/output port		A/D converter (ADC)	D/A converter (DAC)	Comparator (CMP)	Interrupt	Key interrupt	Capacitive sensing unit (CTSU2L)	Timer array unit (TAU)	Realtime Clock (RTC)	Serial array unit (SAU)	Serial interface IICA (IICA)	Serial interface UARTA (UARTA)	Remote control signal receiver (REMC)
30	P11	—	EI11/ EO11	TOOLRxD	—	—	—	—	—	—	(TI06)/ (TO06)	—	SI00/ RxD0/ SDA00	—	—	—
31	P10	—	EI10/ EO10	—	—	—	—	—	—	—	(TI07)/ (TO07)	—	SCK00/ SCL00	—	—	—
32	P146	—	—	—	—	—	—	—	—	—	—	—	—	—	—	—
33	P147	—	EI147	—	ANI18	—	IVCMP0	—	—	—	—	—	—	—	—	—
34	P27	—	—	—	ANI7	—	—	—	—	TS25 **Note**	—	—	—	—	—	—
35	P26	—	—	—	ANI6	—	—	—	—	TS24 **Note**	—	—	—	—	—	—
36	P25	—	—	—	ANI5	—	—	—	—	TS23 **Note**	—	—	—	—	—	—
37	P24	—	—	—	ANI4	—	—	—	—	TS22 **Note**	—	—	—	—	—	—
38	P23	—	EI23	—	ANI3	ANO1	IVREF0	—	—	TS21 **Note**	—	—	—	—	—	—
39	P22	—	EI22	—	ANI2	ANO0	—	—	—	TS20 **Note**	—	—	—	—	—	—
40	P21	—	EI21	—	ANI1/ AVREFM	—	—	—	—	—	—	—	—	—	—	—
41	P20	—	EI20	—	ANI0/ AVREFP	—	—	—	—	—	—	—	—	—	—	—
42	P01	—	EI01/ EO01	—	—	—	—	—	—	TS27 **Note**	TO00	—	RxD1	—	—	—
43	P00	—	EI00	—	—	—	—	—	—	TS26 **Note**	TI00	—	TxD1	—	—	—
44	P120	—	EI120	—	ANI19	—	IVCMP1	—	—	—	—	—	—	—	TxDA1	—

Note Not present in products with 128 or fewer Kbytes of code flash memory.

Downloaded from Arrow.com.

1.3.6 48-pin products

- 48-pin plastic LFQFP (7 × 7 mm, 0.50-mm pitch)
- 48-pin plastic HWQFN (7 × 7 mm, 0.50-mm pitch)

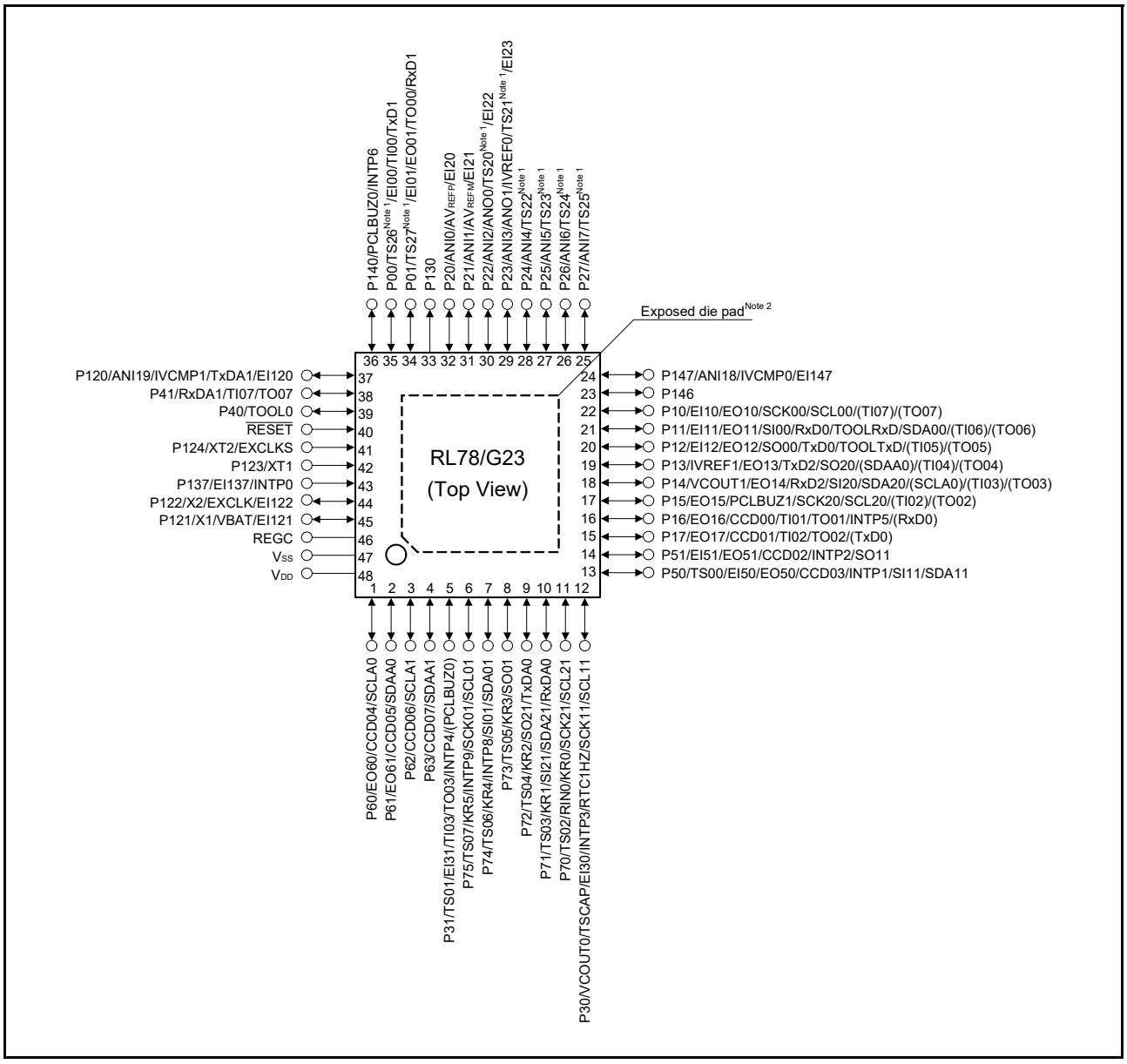

Note 1. Not present in products with 128 or fewer Kbytes of code flash memory.

Note 2. The 48-pin plastic LFQFP (7 × 7 mm, 0.50-mm pitch) products do not have an exposed die pad.

Caution **Connect the REGC pin to Vss via a capacitor (0.47 to 1 μF).**

Remark 1. For pin identification, see **1.4 Pin Identification**.

Remark 2. Functions in parentheses in the above figure can be assigned via settings in the peripheral I/O redirection register (PIOR). For details, see **4.3.10 Peripheral I/O redirection register (PIOR)** in the RL78/G23 User's Manual.

Remark 3. It is recommended to connect an exposed die pad to Vss.

Downloaded from Arrow.com.

Table 1 - 7 Multiplexed Pin Functions of the 48-pin Products (1/2)

Pin Number	I/O			Power supply, system clock, and debugging	Analog Circuits			HMIs			Timers		Communications Interfaces			
48LFQFP, 48HWQFN	Digital port	Controlled current drive port	ELCL input/output port		A/D converter (ADC)	D/A converter (DAC)	Comparator (CMP)	Interrupt	Key interrupt	Capacitive sensing unit (CTSU2L)	Timer array unit (TAU)	Realtime Clock (RTC)	Serial array unit (SAU)	Serial interface IICA (IICA)	Serial interface UARTA (UARTA)	Remote control signal receiver (REMC)
1	P60	CCD04	EO60	—	—	—	—	—	—	—	—	—	—	SCLA0	—	—
2	P61	CCD05	EO61	—	—	—	—	—	—	—	—	—	—	SDAA0	—	—
3	P62	CCD06	—	—	—	—	—	—	—	—	—	—	—	SCLA1	—	—
4	P63	CCD07	—	—	—	—	—	—	—	—	—	—	—	SDAA1	—	—
5	P31	—	EI31	(PCLBUZ0)	—	—	—	INTP4	—	TS01	TI03/ TO03	—	—	—	—	—
6	P75	—	—	—	—	—	—	INTP9	KR5	TS07	—	—	SCK01/ SCL01	—	—	—
7	P74	—	—	—	—	—	—	INTP8	KR4	TS06	—	—	SI01/ SDA01	—	—	—
8	P73	—	—	—	—	—	—	—	KR3	TS05	—	—	SO01	—	—	—
9	P72	—	—	—	—	—	—	—	KR2	TS04	—	—	SO21	—	TxDA0	—
10	P71	—	—	—	—	—	—	—	KR1	TS03	—	—	SI21/ SDA21	—	RxDA0	—
11	P70	—	—	—	—	—	—	—	KR0	TS02	—	—	SCK21/ SCL21	—	—	RIN0
12	P30	—	EI30	—	—	—	VCOUT0	INTP3	—	TSCAP	—	RTC1HZ	SCK11/ SCL11	—	—	—
13	P50	CCD03	EI50/ EO50	—	—	—	—	INTP1	—	TS00	—	—	SI11/ SDA11	—	—	—
14	P51	CCD02	EI51/ EO51	—	—	—	—	INTP2	—	—	—	—	SO11	—	—	—
15	P17	CCD01	EO17	—	—	—	—	—	—	—	TI02/ TO02	—	(TxD0)	—	—	—
16	P16	CCD00	EO16	—	—	—	—	INTP5	—	—	TI01/ TO01	—	(RxD0)	—	—	—
17	P15	—	EO15	PCLBUZ1	—	—	—	—	—	—	(TI02)/ (TO02)	—	SCK20/ SCL20	—	—	—
18	P14	—	EO14	—	—	—	VCOUT1	—	—	—	(TI03)/ (TO03)	—	SI20/ RxD2/ SDA20	(SCLA0)	—	—
19	P13	—	EO13	—	—	—	IVREF1	—	—	—	(TI04)/ (TO04)	—	SO20/ TxD2	(SDAA0)	—	—
20	P12	—	EI12/ EO12	TOOLTxD	—	—	—	—	—	—	(TI05)/ (TO05)	—	SO00/ TxD0	—	—	—
21	P11	—	EI11/ EO11	TOOLRxD	—	—	—	—	—	—	(TI06)/ (TO06)	—	SI00/ RxD0/ SDA00	—	—	—
22	P10	—	EI10/ EO10	—	—	—	—	—	—	—	(TI07)/ (TO07)	—	SCK00/ SCL00	—	—	—
23	P146	—	—	—	—	—	—	—	—	—	—	—	—	—	—	—
24	P147	—	EI147	—	ANI18	—	IVCMP0	—	—	—	—	—	—	—	—	—
25	P27	—	—	—	ANI7	—	—	—	—	TS25 Note	—	—	—	—	—	—
26	P26	—	—	—	ANI6	—	—	—	—	TS24 Note	—	—	—	—	—	—

Downloaded from Arrow.com.

Table 1 - 7 Multiplexed Pin Functions of the 48-pin Products (2/2)

Pin Number	I/O			Power supply, system clock, and debugging	Analog Circuits			HMIs			Timers		Communications Interfaces			
48LFQFP, 48HWQFN	Digital port	Controlled current drive port	ELCL input/output port		A/D converter (ADC)	D/A converter (DAC)	Comparator (CMP)	Interrupt	Key interrupt	Capacitive sensing unit (CTSU2L)	Timer array unit (TAU)	Realtime Clock (RTC)	Serial array unit (SAU)	Serial interface IICA (IICA)	Serial interface UARTA (UARTA)	Remote control signal receiver (REMC)
27	P25	—	—	—	ANI5	—	—	—	—	TS23 **Note**	—	—	—	—	—	—
28	P24	—	—	—	ANI4	—	—	—	—	TS22 **Note**	—	—	—	—	—	—
29	P23	—	EI23	—	ANI3	ANO1	IVREF0	—	—	TS21 **Note**	—	—	—	—	—	—
30	P22	—	EI22	—	ANI2	ANO0	—	—	—	TS20 **Note**	—	—	—	—	—	—
31	P21	—	EI21	—	ANI1/ AVREFM	—	—	—	—	—	—	—	—	—	—	—
32	P20	—	EI20	—	ANI0/ AVREFP	—	—	—	—	—	—	—	—	—	—	—
33	P130	—	—	—	—	—	—	—	—	—	—	—	—	—	—	—
34	P01	—	EI01/ EO01	—	—	—	—	—	—	TS27 **Note**	TO00	—	RxD1	—	—	—
35	P00	—	EI00	—	—	—	—	—	—	TS26 **Note**	TI00	—	TxD1	—	—	—
36	P140	—	—	PCLBUZ0	—	—	—	INTP6	—	—	—	—	—	—	—	—
37	P120	—	EI120	—	ANI19	—	IVCMP1	—	—	—	—	—	—	—	TxDA1	—
38	P41	—	—	—	—	—	—	—	—	—	TI07/ TO07	—	—	—	RxDA1	—
39	P40	—	—	TOOL0	—	—	—	—	—	—	—	—	—	—	—	—
40	—	—	—	$\overline{\text{RESET}}$	—	—	—	—	—	—	—	—	—	—	—	—
41	P124	—	—	XT2/ EXCLKS	—	—	—	—	—	—	—	—	—	—	—	—
42	P123	—	—	XT1	—	—	—	—	—	—	—	—	—	—	—	—
43	P137	—	EI137	—	—	—	—	INTP0	—	—	—	—	—	—	—	—
44	P122	—	EI122	X2/EXCLK	—	—	—	—	—	—	—	—	—	—	—	—
45	P121	—	EI121	X1/VBAT	—	—	—	—	—	—	—	—	—	—	—	—
46	—	—	—	REGC	—	—	—	—	—	—	—	—	—	—	—	—
47	—	—	—	VSS	—	—	—	—	—	—	—	—	—	—	—	—
48	—	—	—	VDD	—	—	—	—	—	—	—	—	—	—	—	—

Note Not present in products with 128 or fewer Kbytes of code flash memory.

Downloaded from Arrow.com.

1.3.7 52-pin products

- 52-pin plastic LQFP (10 × 10 mm, 0.65-mm pitch)

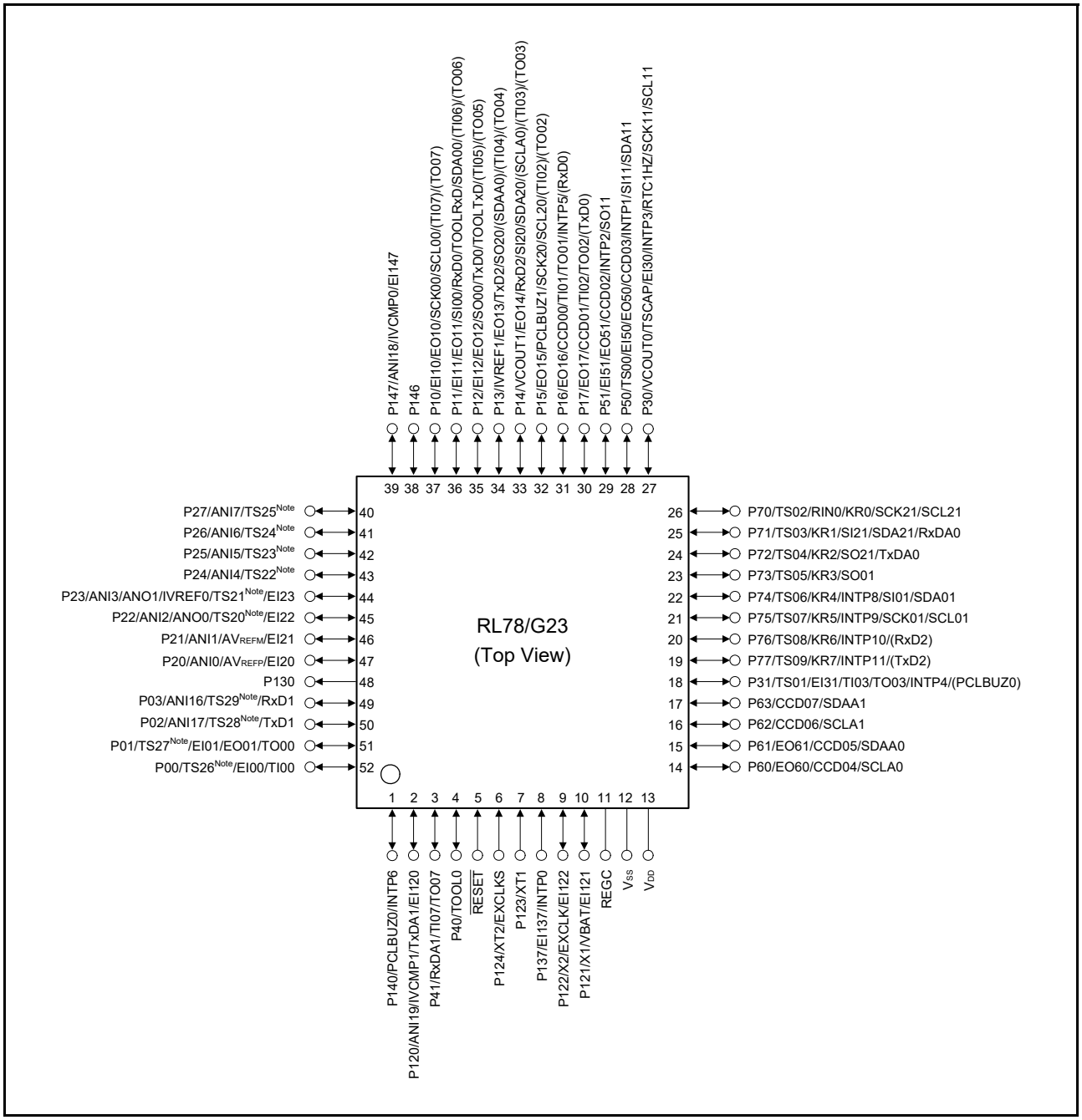

Note Not present in products with 128 or fewer Kbytes of code flash memory.

Caution **Connect the REGC pin to Vss via a capacitor (0.47 to 1 μF).**

Remark 1. For pin identification, see **1.4 Pin Identification**.

Remark 2. Functions in parentheses in the above figure can be assigned via settings in the peripheral I/O redirection register (PIOR). For details, see **4.3.10 Peripheral I/O redirection register (PIOR)** in the RL78/G23 User's Manual.

Downloaded from Arrow.com.

Table 1 - 8 Multiplexed Pin Functions of the 52-pin Products (1/2)

Pin Number	I/O				Analog Circuits			HMIs			Timers		Communications Interfaces			
52LFQFP	Digital port	Controlled current drive port	ELCL input/output port	Power supply, system clock, and debugging	A/D converter (ADC)	D/A converter (DAC)	Comparator (CMP)	Interrupt	Key interrupt	Capacitive sensing unit (CTSU2L)	Timer array unit (TAU)	Realtime Clock (RTC)	Serial array unit (SAU)	Serial interface IICA (IICA)	Serial interface UARTA (UARTA)	Remote control signal receiver (REMC)
1	P140	—	—	PCLBUZ0	—	—	—	INTP6	—	—	—	—	—	—	—	—
2	P120	—	EI120	—	ANI19	—	IVCMP1	—	—	—	—	—	—	—	TxDA1	—
3	P41	—	—	—	—	—	—	—	—	—	TI07/ TO07	—	—	—	RxDA1	—
4	P40	—	—	TOOL0	—	—	—	—	—	—	—	—	—	—	—	—
5	—	—	—	$\overline{\text{RESET}}$	—	—	—	—	—	—	—	—	—	—	—	—
6	P124	—	—	XT2/ EXCLKS	—	—	—	—	—	—	—	—	—	—	—	—
7	P123	—	—	XT1	—	—	—	—	—	—	—	—	—	—	—	—
8	P137	—	EI137	—	—	—	—	INTP0	—	—	—	—	—	—	—	—
9	P122	—	EI122	X2/EXCLK	—	—	—	—	—	—	—	—	—	—	—	—
10	P121	—	EI121	X1/VBAT	—	—	—	—	—	—	—	—	—	—	—	—
11	—	—	—	REGC	—	—	—	—	—	—	—	—	—	—	—	—
12	—	—	—	V_{SS}	—	—	—	—	—	—	—	—	—	—	—	—
13	—	—	—	V_{DD}	—	—	—	—	—	—	—	—	—	—	—	—
14	P60	CCD04	EO60	—	—	—	—	—	—	—	—	—	—	SCLA0	—	—
15	P61	CCD05	EO61	—	—	—	—	—	—	—	—	—	—	SDAA0	—	—
16	P62	CCD06	—	—	—	—	—	—	—	—	—	—	—	SCLA1	—	—
17	P63	CCD07	—	—	—	—	—	—	—	—	—	—	—	SDAA1	—	—
18	P31	—	EI31	(PCLBUZ0)	—	—	—	INTP4	—	TS01	TI03/ TO03	—	—	—	—	—
19	P77	—	—	—	—	—	—	INTP11	KR7	TS09	—	—	(TxD2)	—	—	—
20	P76	—	—	—	—	—	—	INTP10	KR6	TS08	—	—	(RxD2)	—	—	—
21	P75	—	—	—	—	—	—	INTP9	KR5	TS07	—	—	SCK01/ SCL01	—	—	—
22	P74	—	—	—	—	—	—	INTP8	KR4	TS06	—	—	SI01/ SDA01	—	—	—
23	P73	—	—	—	—	—	—	—	KR3	TS05	—	—	SO01	—	—	—
24	P72	—	—	—	—	—	—	—	KR2	TS04	—	—	SO21	—	TxDA0	—
25	P71	—	—	—	—	—	—	—	KR1	TS03	—	—	SI21/ SDA21	—	RxDA0	—
26	P70	—	—	—	—	—	—	—	KR0	TS02	—	—	SCK21/ SCL21	—	—	RIN0
27	P30	—	EI30	—	—	—	VCOUT0	INTP3	—	TSCAP	—	RTC1HZ	SCK11/ SCL11	—	—	—
28	P50	CCD03	EI50/ EO50	—	—	—	—	INTP1	—	TS00	—	—	SI11/ SDA11	—	—	—
29	P51	CCD02	EI51/ EO51	—	—	—	—	INTP2	—	—	—	—	SO11	—	—	—
30	P17	CCD01	EO17	—	—	—	—	—	—	—	TI02/ TO02	—	(TxD0)	—	—	—
31	P16	CCD00	EO16	—	—	—	—	INTP5	—	—	TI01/ TO01	—	(RxD0)	—	—	—

Downloaded from Arrow.com.

Table 1 - 8 Multiplexed Pin Functions of the 52-pin Products (2/2)

Pin Number	I/O			Power supply, system clock, and debugging	Analog Circuits			HMIs			Timers		Communications Interfaces			
52LFQFP	Digital port	Controlled current drive port	ELCL input/output port		A/D converter (ADC)	D/A converter (DAC)	Comparator (CMP)	Interrupt	Key interrupt	Capacitive sensing unit (CTSU2L)	Timer array unit (TAU)	Realtime Clock (RTC)	Serial array unit (SAU)	Serial interface IICA (IICA)	Serial interface UARTA (UARTA)	Remote control signal receiver (REMC)
32	P15	—	EO15	PCLBUZ1	—	—	—	—	—	—	(TI02)/ (TO02)	—	SCK20/ SCL20	—	—	—
33	P14	—	EO14	—	—	—	VCOUT1	—	—	—	(TI03)/ (TO03)	—	SI20/ RxD2/ SDA20	(SCLA0)	—	—
34	P13	—	EO13	—	—	—	IVREF1	—	—	—	(TI04)/ (TO04)	—	SO20/ TxD2	(SDAA0)	—	—
35	P12	—	EI12/ EO12	TOOLTxD	—	—	—	—	—	—	(TI05)/ (TO05)	—	SO00/ TxD0	—	—	—
36	P11	—	EI11/ EO11	TOOLRxD	—	—	—	—	—	—	(TI06)/ (TO06)	—	SI00/ RxD0/ SDA00	—	—	—
37	P10	—	EI10/ EO10	—	—	—	—	—	—	—	(TI07)/ (TO07)	—	SCK00/ SCL00	—	—	—
38	P146	—	—	—	—	—	—	—	—	—	—	—	—	—	—	—
39	P147	—	EI147	—	ANI18	—	IVCMP0	—	—	—	—	—	—	—	—	—
40	P27	—	—	—	ANI7	—	—	—	—	TS25 **Note**	—	—	—	—	—	—
41	P26	—	—	—	ANI6	—	—	—	—	TS24 **Note**	—	—	—	—	—	—
42	P25	—	—	—	ANI5	—	—	—	—	TS23 **Note**	—	—	—	—	—	—
43	P24	—	—	—	ANI4	—	—	—	—	TS22 **Note**	—	—	—	—	—	—
44	P23	—	EI23	—	ANI3	ANO1	IVREF0	—	—	TS21 **Note**	—	—	—	—	—	—
45	P22	—	EI22	—	ANI2	ANO0	—	—	—	TS20 **Note**	—	—	—	—	—	—
46	P21	—	EI21	—	ANI1/ AVREFM	—	—	—	—	—	—	—	—	—	—	—
47	P20	—	EI20	—	ANI0/ AVREFP	—	—	—	—	—	—	—	—	—	—	—
48	P130	—	—	—	—	—	—	—	—	—	—	—	—	—	—	—
49	P03	—	—	—	ANI16	—	—	—	—	TS29 **Note**	—	—	RxD1	—	—	—
50	P02	—	—	—	ANI17	—	—	—	—	TS28 **Note**	—	—	TxD1	—	—	—
51	P01	—	EI01/ EO01	—	—	—	—	—	—	TS27 **Note**	TO00	—	—	—	—	—
52	P00	—	EI00	—	—	—	—	—	—	TS26 **Note**	TI00	—	—	—	—	—

Note Not present in products with 128 or fewer Kbytes of code flash memory.

Downloaded from Arrow.com.

1.3.8 64-pin products

- 64-pin plastic LQFP (12 × 12 mm, 0.65-mm pitch)
- 64-pin plastic LFQFP (10 × 10 mm, 0.50-mm pitch)

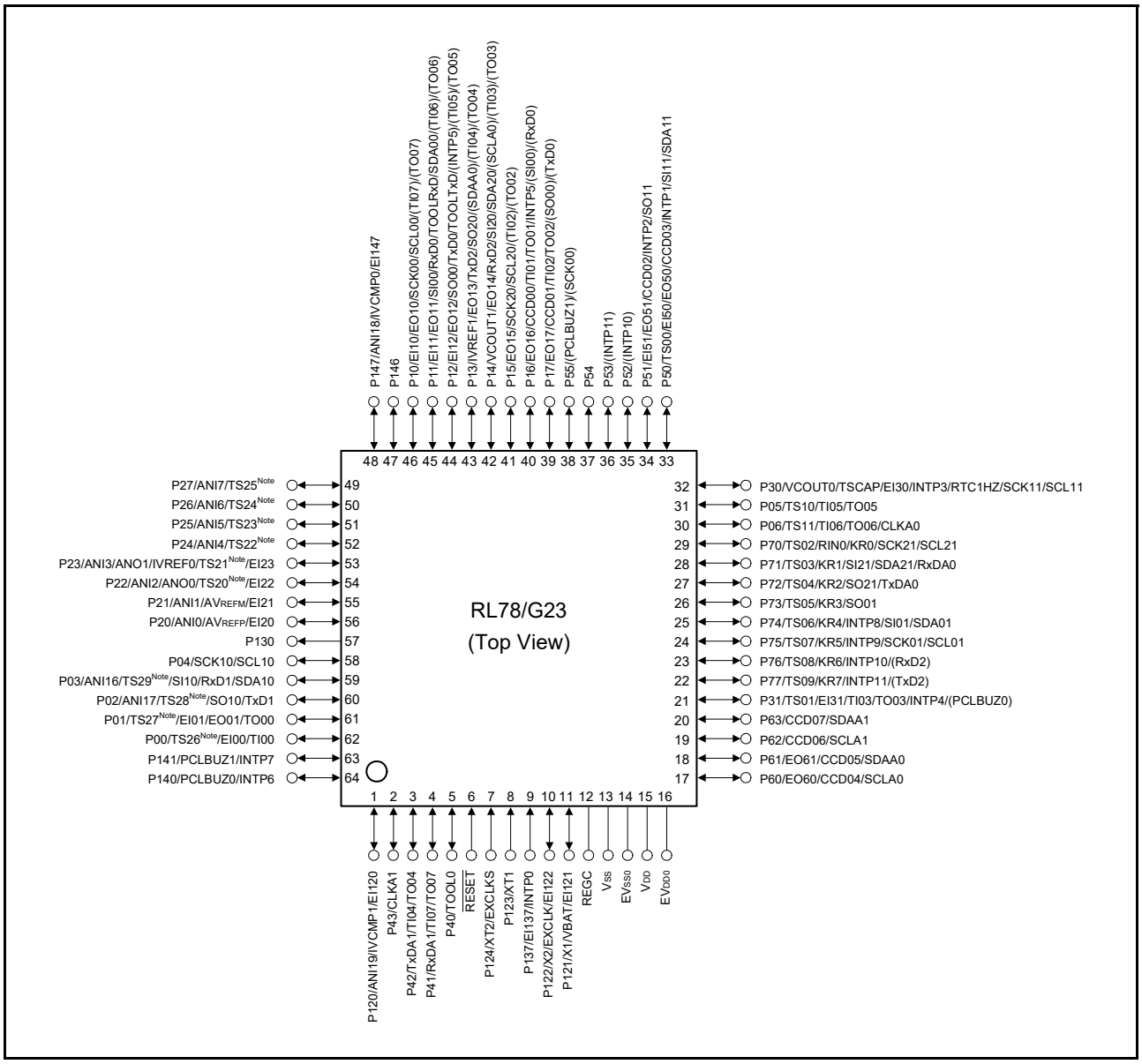

Note Not present in products with 128 or fewer Kbytes of code flash memory.

Caution 1. Connect the EVSS0 pin to the same ground as the VSS pin.

Caution 2. Make sure that the voltage on the VDD pin is no less than that on the EVDD0 pin.

Caution 3. Connect the REGC pin to VSS via a capacitor (0.47 to 1 μF).

Remark 1. For pin identification, see **1.4 Pin Identification**.

Remark 2. When using the microcontroller for an application where the noise generated inside the microcontroller must be reduced, it is recommended to supply separate powers to the VDD and EVDD0 pins and connect the VSS and EVSS0 pins to separate ground lines.

Remark 3. Functions in parentheses in the above figure can be assigned via settings in the peripheral I/O redirection register (PIOR). For details, see 4.3.10 Peripheral I/O redirection register (PIOR) in the RL78/G23 User's Manual.

Downloaded from Arrow.com.

Table 1 - 9 Multiplexed Pin Functions of the 64-pin Products (1/3)

Pin Number	I/O				Analog Circuits			HMIs			Timers		Communications Interfaces			
64LFQFP, 64LQFP	Digital port	Controlled current drive port	ELCL input/output port	Power supply, system clock, and debugging	A/D converter (ADC)	D/A converter (DAC)	Comparator (CMP)	Interrupt	Key interrupt	Capacitive sensing unit (CTSU2L)	Timer array unit (TAU)	Realtime Clock (RTC)	Serial array unit (SAU)	Serial interface IICA (IICA)	Serial interface UARTA (UARTA)	Remote control signal receiver (REMC)
1	P120	—	EI120	—	ANI19	—	IVCMP1	—	—	—	—	—	—	—	—	—
2	P43	—	—	—	—	—	—	—	—	—	—	—	—	—	CLKA1	—
3	P42	—	—	—	—	—	—	—	—	—	TI04/ TO04	—	—	—	TxDA1	—
4	P41	—	—	—	—	—	—	—	—	—	TI07/ TO07	—	—	—	RxDA1	—
5	P40	—	—	TOOL0	—	—	—	—	—	—	—	—	—	—	—	—
6	—	—	—	$\overline{\text{RESET}}$	—	—	—	—	—	—	—	—	—	—	—	—
7	P124	—	—	XT2/ EXCLKS	—	—	—	—	—	—	—	—	—	—	—	—
8	P123	—	—	XT1	—	—	—	—	—	—	—	—	—	—	—	—
9	P137	—	EI137	—	—	—	—	INTP0	—	—	—	—	—	—	—	—
10	P122	—	EI122	X2/EXCLK	—	—	—	—	—	—	—	—	—	—	—	—
11	P121	—	EI121	X1/VBAT	—	—	—	—	—	—	—	—	—	—	—	—
12	—	—	—	REGC	—	—	—	—	—	—	—	—	—	—	—	—
13	—	—	—	V_{SS}	—	—	—	—	—	—	—	—	—	—	—	—
14	—	—	—	EV_{SS0}	—	—	—	—	—	—	—	—	—	—	—	—
15	—	—	—	V_{DD}	—	—	—	—	—	—	—	—	—	—	—	—
16	—	—	—	EV_{DD0}	—	—	—	—	—	—	—	—	—	—	—	—
17	P60	CCD04	EO60	—	—	—	—	—	—	—	—	—	—	SCLA0	—	—
18	P61	CCD05	EO61	—	—	—	—	—	—	—	—	—	—	SDAA0	—	—
19	P62	CCD06	—	—	—	—	—	—	—	—	—	—	—	SCLA1	—	—
20	P63	CCD07	—	—	—	—	—	—	—	—	—	—	—	SDAA1	—	—
21	P31	—	EI31	(PCLBUZ0)	—	—	—	INTP4	—	TS01	TI03/ TO03	—	—	—	—	—
22	P77	—	—	—	—	—	—	INTP11	KR7	TS09	—	—	(TxD2)	—	—	—
23	P76	—	—	—	—	—	—	INTP10	KR6	TS08	—	—	(RxD2)	—	—	—
24	P75	—	—	—	—	—	—	INTP9	KR5	TS07	—	—	SCK01/ SCL01	—	—	—
25	P74	—	—	—	—	—	—	INTP8	KR4	TS06	—	—	SI01/ SDA01	—	—	—
26	P73	—	—	—	—	—	—	—	KR3	TS05	—	—	SO01	—	—	—
27	P72	—	—	—	—	—	—	—	KR2	TS04	—	—	SO21	—	TxDA0	—
28	P71	—	—	—	—	—	—	—	KR1	TS03	—	—	SI21/ SDA21	—	RxDA0	—
29	P70	—	—	—	—	—	—	—	KR0	TS02	—	—	SCK21/ SCL21	—	—	RIN0
30	P06	—	—	—	—	—	—	—	—	TS11	TI06/ TO06	—	—	—	CLKA0	—
31	P05	—	—	—	—	—	—	—	—	TS10	TI05/ TO05	—	—	—	—	—

Downloaded from Arrow.com.

Table 1 - 9 Multiplexed Pin Functions of the 64-pin Products (2/3)

Pin Number	I/O			Power supply, system clock, and debugging	Analog Circuits			HMIs			Timers		Communications Interfaces			
64LFQFP, 64LQFP	Digital port	Controlled current drive port	ELCL input/output port		A/D converter (ADC)	D/A converter (DAC)	Comparator (CMP)	Interrupt	Key interrupt	Capacitive sensing unit (CTSU2L)	Timer array unit (TAU)	Realtime Clock (RTC)	Serial array unit (SAU)	Serial interface IICA (IICA)	Serial interface UARTA (UARTA)	Remote control signal receiver (REMC)
32	P30	—	EI30	—	—	—	VCOUT0	INTP3	—	TSCAP	—	RTC1HZ	SCK11/ SCL11	—	—	—
33	P50	CCD03	EI50/ EO50	—	—	—	—	INTP1	—	TS00	—	—	SI11/ SDA11	—	—	—
34	P51	CCD02	EI51/ EO51	—	—	—	—	INTP2	—	—	—	—	SO11	—	—	—
35	P52	—	—	—	—	—	—	(INTP10)	—	—	—	—	—	—	—	—
36	P53	—	—	—	—	—	—	(INTP11)	—	—	—	—	—	—	—	—
37	P54	—	—	—	—	—	—	—	—	—	—	—	—	—	—	—
38	P55	—	—	(PCLBUZ1)	—	—	—	—	—	—	—	—	(SCK00)	—	—	—
39	P17	CCD01	EO17	—	—	—	—	—	—	—	TI02/ TO02	—	(SO00)/ (TxD0)	—	—	—
40	P16	CCD00	EO16	—	—	—	—	INTP5	—	—	TI01/ TO01	—	(SI00)/ (RxD0)	—	—	—
41	P15	—	EO15	—	—	—	—	—	—	—	(TI02)/ (TO02)	—	SCK20/ SCL20	—	—	—
42	P14	—	EO14	—	—	—	VCOUT1	—	—	—	(TI03)/ (TO03)	—	SI20/ RxD2/ SDA20	(SCLA0)	—	—
43	P13	—	EO13	—	—	—	IVREF1	—	—	—	(TI04)/ (TO04)	—	SO20/ TxD2	(SDAA0)	—	—
44	P12	—	EI12/ EO12	TOOLTxD	—	—	—	(INTP5)	—	—	(TI05)/ (TO05)	—	SO00/ TxD0	—	—	—
45	P11	—	EI11/ EO11	TOOLRxD	—	—	—	—	—	—	(TI06)/ (TO06)	—	SI00/ RxD0/ SDA00	—	—	—
46	P10	—	EI10/ EO10	—	—	—	—	—	—	—	(TI07)/ (TO07)	—	SCK00/ SCL00	—	—	—
47	P146	—	—	—	—	—	—	—	—	—	—	—	—	—	—	—
48	P147	—	EI147	—	ANI18	—	IVCMP0	—	—	—	—	—	—	—	—	—
49	P27	—	—	—	ANI7	—	—	—	—	TS25 Note	—	—	—	—	—	—
50	P26	—	—	—	ANI6	—	—	—	—	TS24 Note	—	—	—	—	—	—
51	P25	—	—	—	ANI5	—	—	—	—	TS23 Note	—	—	—	—	—	—
52	P24	—	—	—	ANI4	—	—	—	—	TS22 Note	—	—	—	—	—	—
53	P23	—	EI23	—	ANI3	ANO1	IVREF0	—	—	TS21 Note	—	—	—	—	—	—
54	P22	—	EI22	—	ANI2	ANO0	—	—	—	TS20 Note	—	—	—	—	—	—
55	P21	—	EI21	—	ANI1/ AVREFM	—	—	—	—	—	—	—	—	—	—	—
56	P20	—	EI20	—	ANI0/ AVREFP	—	—	—	—	—	—	—	—	—	—	—
57	P130	—	—	—	—	—	—	—	—	—	—	—	—	—	—	—

Downloaded from Arrow.com.

Table 1 - 9 Multiplexed Pin Functions of the 64-pin Products (3/3)

Pin Number	I/O			Power supply, system clock, and debugging	Analog Circuits			HMIs			Timers		Communications Interfaces			
64LFQFP, 64LQFP	Digital port	Controlled current drive port	ELCL input/output port		A/D converter (ADC)	D/A converter (DAC)	Comparator (CMP)	Interrupt	Key interrupt	Capacitive sensing unit (CTSU2L)	Timer array unit (TAU)	Realtime Clock (RTC)	Serial array unit (SAU)	Serial interface IICA (IICA)	Serial interface UARTA (UARTA)	Remote control signal receiver (REMC)
58	P04	—	—	—	—	—	—	—	—	—	—	—	SCK10/ SCL10	—	—	—
59	P03	—	—	—	ANI16	—	—	—	—	TS29 **Note**	—	—	SI10/ RxD1/ SDA10	—	—	—
60	P02	—	—	—	ANI17	—	—	—	—	TS28 **Note**	—	—	SO10/ TxD1	—	—	—
61	P01	—	EI01/ EO01	—	—	—	—	—	—	TS27 **Note**	TO00	—	—	—	—	—
62	P00	—	EI00	—	—	—	—	—	—	TS26 **Note**	TI00	—	—	—	—	—
63	P141	—	—	PCLBUZ1	—	—	—	INTP7	—	—	—	—	—	—	—	—
64	P140	—	—	PCLBUZ0	—	—	—	INTP6	—	—	—	—	—	—	—	—

Note Not present in products with 128 or fewer Kbytes of code flash memory.

Downloaded from Arrow.com.

- 64-pin plastic WFLGA (5 × 5 mm, 0.50-mm pitch)

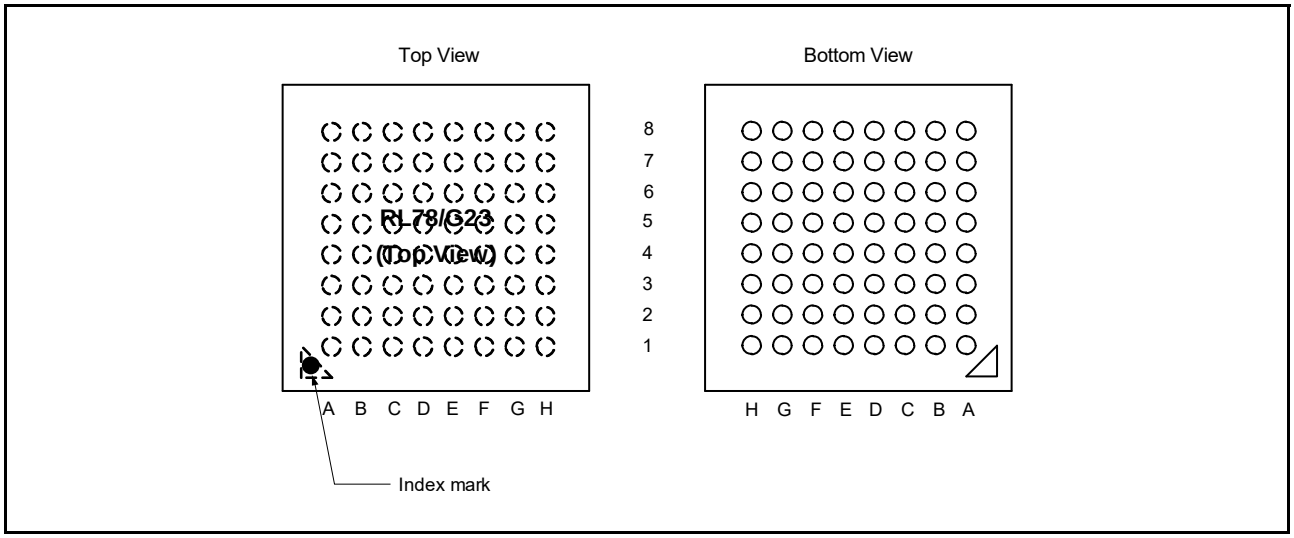

	A	B	C	D	E	F	G	H
8	EVDD0	EVSS0	P121/X1/EI121/VBAT	P122/X2/EXCLK/EI122	P137/INTP0/EI137	P123/XT1	P124/XT2/EXCLKS	P120/ANI19/IVCMP1/EI120
7	P60/CCD04/SCLA0/EO60	VDD	VSS	REGC	$\overline{\text{RESET}}$	P01/TS27Note/EI01/EO01/TO00	P00/TS26Note/EI00/TI00	P140/PCLBUZ0/INTP6
6	P61/CCD05/SDAA0/EO61	P62/CCD06/SCLA1	P63/CCD07/SDAA1	P40/TOOL0	P41/TI07/TO07/RxDA1	P43/CLKA1	P02/ANI17/TS28Note/SO10/TxD1	P141/PCLBUZ1/INTP7
5	P77/KR7/TS09/INTP11/(TxD2)	P31/TI03/TO03/INTP4/TS01/EI31/(PCLBUZ0)	P53/(INTP11)	P42/TI04/TO04/TxDA1	P03/ANI16/TS29Note/SI10/RxD1/SDA10	P04/SCK10/SCL10	P130	P20/ANI0/AVREFP/EI20
4	P75/KR5/TS07/INTP9/SCK01/SCL01	P76/KR6/TS08/INTP10/(RxD2)	P52/(INTP10)	P54	P16/CCD00/TI01/TO01/INTP5/EO16/(SI00)/(RxD0)	P21/ANI1/AVREFM/EI21	P22/ANI2/ANO0/EI22/TS20Note	P23/ANI3/ANO1/IVREF0/EI23/TS21Note
3	P70/KR0/TS02/RIN0/SCK21/SCL21	P73/KR3/TS05/SO01	P74/KR4/TS06/INTP8/SI01/SDA01	P17/CCD01/TI02/TO02/EO17/(SO00)/(TxD0)	P15/SCK20/SCL20/EO15/(TI02)/(TO02)	P12/SO00/TxD0/TOOLTxD/EI12/EO12/(INTP5)/(TI05)/(TO05)	P24/ANI4/TS22Note	P26/ANI6/TS24Note
2	P30/INTP3/TSCAP/RTC1HZ/EI30/VCOUT0/SCK11/SCL11	P72/KR2/TS04/SO21/TxDA0	P71/KR1/TS03/SI21/SDA21/RxDA0	P06/TS11/TI06/TO06/CLKA0	P14/RxD2/SI20/SDA20/VCOUT1/EO14/(SCLA0)/(TI03)/(TO03)	P11/SI00/RxD0/TOOLRxD/SDA00/EI11/EO11/(TI06)/(TO06)	P25/ANI5/TS23Note	P27/ANI7/TS25Note
1	P05/TS10/TI05/TO05	P50/CCD03/TS00/EI50/EO50/INTP1/SI11/SDA11	P51/CCD02/EI51/EO51/INTP2/SO11	P55/(PCLBUZ1)/(SCK00)	P13/TxD2/SO20/IVREF1/EO13/(SDAA0)/(TI04)/(TO04)	P10/SCK00/SCL00/EI10/EO10/(TI07)/(TO07)	P146	P147/ANI18/EI147/IVCMP0

Note Not present in products with 128 or fewer Kbytes of code flash memory.

(Cautions and Remarks are listed on the next page.)

Downloaded from Arrow.com.

Caution 1. Connect the EV_{SS0} pin to the same ground as the V_{SS} pin.
Caution 2. Make sure that the voltage on the V_{DD} pin is no less than that on the EV_{DD0} pin.
Caution 3. Connect the REGC pin to V_{SS} via a capacitor (0.47 to 1 μF).

Remark 1. For pin identification, see **1.4 Pin Identification**.
Remark 2. When using the microcontroller for an application where the noise generated inside the microcontroller must be reduced, it is recommended to supply separate powers to the V_{DD} and EV_{DD0} pins and connect the V_{SS} and EV_{SS0} pins to separate ground lines.
Remark 3. Functions in parentheses in the above figure can be assigned via settings in the peripheral I/O redirection register (PIOR). For details, see **4.3.10 Peripheral I/O redirection register (PIOR)** in the RL78/G23 User's Manual.

Downloaded from Arrow.com.

Table 1 - 10 Multiplexed Pin Functions 2 of the 64-pin Products (1/3)

Pin Number	I/O			Power supply, system clock, and debugging	Analog Circuits			HMIs			Timers		Communications Interfaces			
64WFLGA	Digital port	Controlled current drive port	ELCL input/output port		A/D converter (ADC)	D/A converter (DAC)	Comparator (CMP)	Interrupt	Key interrupt	Capacitive sensing unit (CTSU2L)	Timer array unit (TAU)	Realtime Clock (RTC)	Serial array unit (SAU)	Serial interface IICA (IICA)	Serial interface UARTA (UARTA)	Remote control signal receiver (REMC)
A1	P05	—	—	—	—	—	—	—	—	TS10	TI05/ TO05	—	—	—	—	—
A2	P30	—	EI30	—	—	—	VCOUT0	INTP3	—	TSCAP	—	RTC1HZ	SCK11/ SCL11	—	—	—
A3	P70	—	—	—	—	—	—	—	KR0	TS02	—	—	SCK21/ SCL21	—	—	RIN0
A4	P75	—	—	—	—	—	—	INTP9	KR5	TS07	—	—	SCK01/ SCL01	—	—	—
A5	P77	—	—	—	—	—	—	INTP11	KR7	TS09	—	—	(TxD2)	—	—	—
A6	P61	CCD05	EO61	—	—	—	—	—	—	—	—	—	—	SDAA0	—	—
A7	P60	CCD04	EO60	—	—	—	—	—	—	—	—	—	—	SCLA0	—	—
A8	—	—	—	EV_{DD0}	—	—	—	—	—	—	—	—	—	—	—	—
B1	P50	CCD03	EI50/ EO50	—	—	—	—	INTP1	—	TS00	—	—	SI11/ SDA11	—	—	—
B2	P72	—	—	—	—	—	—	—	KR2	TS04	—	—	SO21	—	TxDA0	—
B3	P73	—	—	—	—	—	—	—	KR3	TS05	—	—	SO01	—	—	—
B4	P76	—	—	—	—	—	—	INTP10	KR6	TS08	—	—	(RxD2)	—	—	—
B5	P31	—	EI31	(PCLBUZ0)	—	—	—	INTP4	—	TS01	TI03/ TO03	—	—	—	—	—
B6	P62	CCD06	—	—	—	—	—	—	—	—	—	—	—	SCLA1	—	—
B7	—	—	—	V_{DD}	—	—	—	—	—	—	—	—	—	—	—	—
B8	—	—	—	EV_{SS0}	—	—	—	—	—	—	—	—	—	—	—	—
C1	P51	CCD02	EI51/ EO51	—	—	—	—	INTP2	—	—	—	—	SO11	—	—	—
C2	P71	—	—	—	—	—	—	—	KR1	TS03	—	—	SI21/ SDA21	—	RxDA0	—
C3	P74	—	—	—	—	—	—	INTP8	KR4	TS06	—	—	SI01/ SDA01	—	—	—
C4	P52	—	—	—	—	—	—	(INTP10)	—	—	—	—	—	—	—	—
C5	P53	—	—	—	—	—	—	(INTP11)	—	—	—	—	—	—	—	—
C6	P63	CCD07	—	—	—	—	—	—	—	—	—	—	—	SDAA1	—	—
C7	—	—	—	V_{SS}	—	—	—	—	—	—	—	—	—	—	—	—
C8	P121	—	EI121	X1/VBAT	—	—	—	—	—	—	—	—	—	—	—	—
D1	P55	—	—	(PCLBUZ1)	—	—	—	—	—	—	—	—	(SCK00)	—	—	—
D2	P06	—	—	—	—	—	—	—	—	TS11	TI06/ TO06	—	—	—	CLKA0	—
D3	P17	CCD01	EO17	—	—	—	—	—	—	—	TI02/ TO02	—	(SO00)/ (TxD0)	—	—	—
D4	P54	—	—	—	—	—	—	—	—	—	—	—	—	—	—	—
D5	P42	—	—	—	—	—	—	—	—	—	TI04/ TO04	—	—	—	TxDA1	—
D6	P40	—	—	TOOL0	—	—	—	—	—	—	—	—	—	—	—	—
D7	—	—	—	REGC	—	—	—	—	—	—	—	—	—	—	—	—

Downloaded from Arrow.com.

Table 1 - 10 Multiplexed Pin Functions 2 of the 64-pin Products (2/3)

Pin Number	I/O			Power supply, system clock, and debugging	Analog Circuits			HMIs			Timers		Communications Interfaces			
64WFLGA	Digital port	Controlled current drive port	ELCL input/output port		A/D converter (ADC)	D/A converter (DAC)	Comparator (CMP)	Interrupt	Key interrupt	Capacitive sensing unit (CTSU2L)	Timer array unit (TAU)	Realtime Clock (RTC)	Serial array unit (SAU)	Serial interface IICA (IICA)	Serial interface UARTA (UARTA)	Remote control signal receiver (REMC)
D8	P122	—	EI122	X2/EXCLK	—	—	—	—	—	—	—	—	—	—	—	—
E1	P13	—	EO13	—	—	—	IVREF1	—	—	—	(TI04)/ (TO04)	—	SO20/ TxD2	(SDAA0)	—	—
E2	P14	—	EO14	—	—	—	VCOUT1	—	—	—	(TI03)/ (TO03)	—	SI20/ RxD2/ SDA20	(SCLA0)	—	—
E3	P15	—	EO15	—	—	—	—	—	—	—	(TI02)/ (TO02)	—	SCK20/ SCL20	—	—	—
E4	P16	CCD00	EO16	—	—	—	—	INTP5	—	—	TI01/ TO01	—	(SI00)/ (RxD0)	—	—	—
E5	P03	—	—	—	ANI16	—	—	—	—	TS29 Note	—	—	SI10/ RxD1/ SDA10	—	—	—
E6	P41	—	—	—	—	—	—	—	—	—	TI07/ TO07	—	—	—	RxDA1	—
E7	—	—	—	$\overline{\text{RESET}}$	—	—	—	—	—	—	—	—	—	—	—	—
E8	P137	—	EI137	—	—	—	—	INTP0	—	—	—	—	—	—	—	—
F1	P10	—	EI10/ EO10	—	—	—	—	—	—	—	(TI07)/ (TO07)	—	SCK00/ SCL00	—	—	—
F2	P11	—	EI11/ EO11	TOOLRxD	—	—	—	—	—	—	(TI06)/ (TO06)	—	SI00/ RxD0/ SDA00	—	—	—
F3	P12	—	EI12/ EO12	TOOLTxD	—	—	—	(INTP5)	—	—	(TI05)/ (TO05)	—	SO00/ TxD0	—	—	—
F4	P21	—	EI21	—	ANI1/ AVREFM	—	—	—	—	—	—	—	—	—	—	—
F5	P04	—	—	—	—	—	—	—	—	—	—	—	SCK10/ SCL10	—	—	—
F6	P43	—	—	—	—	—	—	—	—	—	—	—	—	—	CLKA1	—
F7	P01	—	EI01/ EO01	—	—	—	—	—	—	TS27 Note	TO00	—	—	—	—	—
F8	P123	—	—	XT1	—	—	—	—	—	—	—	—	—	—	—	—
G1	P146	—	—	—	—	—	—	—	—	—	—	—	—	—	—	—
G2	P25	—	—	—	ANI5	—	—	—	—	TS23 Note	—	—	—	—	—	—
G3	P24	—	—	—	ANI4	—	—	—	—	TS22 Note	—	—	—	—	—	—
G4	P22	—	EI22	—	ANI2	ANO0	—	—	—	TS20 Note	—	—	—	—	—	—
G5	P130	—	—	—	—	—	—	—	—	—	—	—	—	—	—	—
G6	P02	—	—	—	ANI17	—	—	—	—	TS28 Note	—	—	SO10/ TxD1	—	—	—
G7	P00	—	EI00	—	—	—	—	—	—	TS26 Note	TI00	—	—	—	—	—
G8	P124	—	—	XT2/ EXCLKS	—	—	—	—	—	—	—	—	—	—	—	—
H1	P147	—	EI147	—	ANI18	—	IVCMP0	—	—	—	—	—	—	—	—	—

Downloaded from Arrow.com.

Table 1 - 10 Multiplexed Pin Functions 2 of the 64-pin Products (3/3)

Pin Number	I/O			Power supply, system clock, and debugging	Analog Circuits			HMIs			Timers		Communications Interfaces			
64WFLGA	Digital port	Controlled current drive port	ELCL input/output port		A/D converter (ADC)	D/A converter (DAC)	Comparator (CMP)	Interrupt	Key interrupt	Capacitive sensing unit (CTSU2L)	Timer array unit (TAU)	Realtime Clock (RTC)	Serial array unit (SAU)	Serial interface IICA (IICA)	Serial interface UARTA (UARTA)	Remote control signal receiver (REMC)
H2	P27	—	—	—	ANI7	—	—	—	—	TS25 **Note**	—	—	—	—	—	—
H3	P26	—	—	—	ANI6	—	—	—	—	TS24 **Note**	—	—	—	—	—	—
H4	P23	—	EI23	—	ANI3	ANO1	IVREF0	—	—	TS21 **Note**	—	—	—	—	—	—
H5	P20	—	EI20	—	ANI0/ AVREFP	—	—	—	—	—	—	—	—	—	—	—
H6	P141	—	—	PCLBUZ1	—	—	—	INTP7	—	—	—	—	—	—	—	—
H7	P140	—	—	PCLBUZ0	—	—	—	INTP6	—	—	—	—	—	—	—	—
H8	P120	—	EI120	—	ANI19	—	IVCMP1	—	—	—	—	—	—	—	—	—

Note Not present in products with 128 or fewer Kbytes of code flash memory.

Downloaded from Arrow.com.

1.3.9 80-pin products

- 80-pin plastic LQFP (14 × 14 mm, 0.65-mm pitch)
- 80-pin plastic LFQFP (12 × 12 mm, 0.50-mm pitch)

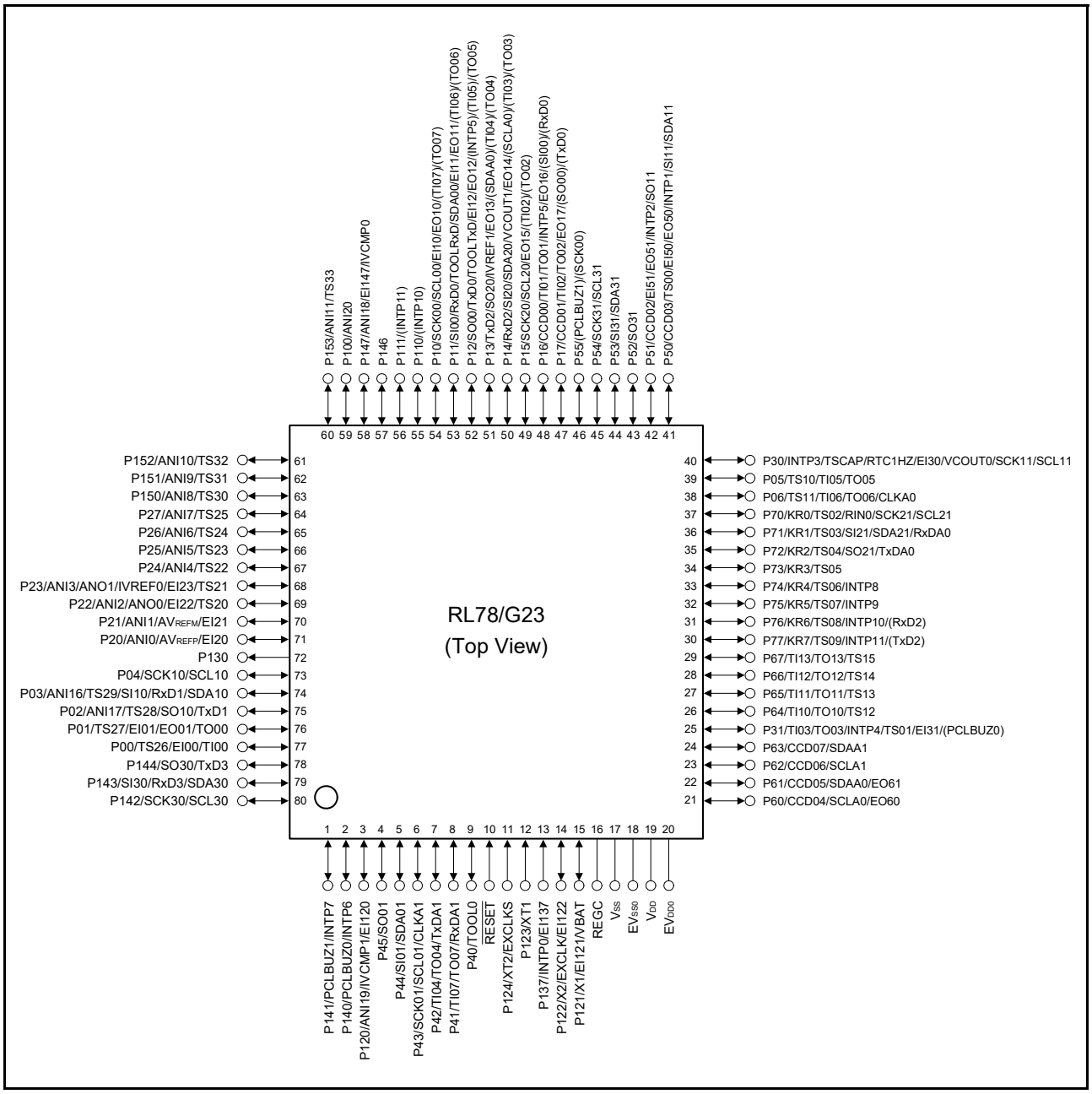

Caution 1. Connect the EV_{SS0} pin to the same ground as the V_{SS} pin.

Caution 2. Make sure that the voltage on the V_{DD} pin is no less than that on the EV_{DD0} pin.

Caution 3. Connect the REGC pin to V_{SS} via a capacitor (0.47 to 1 μF).

Remark 1. For pin identification, see **1.4 Pin Identification**.

Remark 2. When using the microcontroller for an application where the noise generated inside the microcontroller must be reduced, it is recommended to supply separate powers to the V_{DD} and EV_{DD0} pins and connect the V_{SS} and EV_{SS0} pins to separate ground lines.

Remark 3. Functions in parentheses in the above figure can be assigned via settings in the peripheral I/O redirection register (PIOR). For details, see **4.3.10 Peripheral I/O redirection register (PIOR)** in the RL78/G23 User's Manual.

Downloaded from Arrow.com.

Table 1 - 11 Multiplexed Pin Functions of the 80-pin Products (1/3)

Pin Number	I/O			Power supply, system clock, and debugging	Analog Circuits			HMIs			Timers		Communications Interfaces			
80LFQFP, 80LQFP	Digital port	Controlled current drive port	ELCL input/output port		A/D converter (ADC)	D/A converter (DAC)	Comparator (CMP)	Interrupt	Key interrupt	Capacitive sensing unit (CTSU2L)	Timer array unit (TAU)	Realtime Clock (RTC)	Serial array unit (SAU)	Serial interface IICA (IICA)	Serial interface UARTA (UARTA)	Remote control signal receiver (REMC)
1	P141	—	—	PCLBUZ1	—	—	—	INTP7	—	—	—	—	—	—	—	—
2	P140	—	—	PCLBUZ0	—	—	—	INTP6	—	—	—	—	—	—	—	—
3	P120	—	EI120	—	ANI19	—	IVCMP1	—	—	—	—	—	—	—	—	—
4	P45	—	—	—	—	—	—	—	—	—	—	—	SO01	—	—	—
5	P44	—	—	—	—	—	—	—	—	—	—	—	SI01/ SDA01	—	—	—
6	P43	—	—	—	—	—	—	—	—	—	—	—	SCK01/ SCL01	—	CLKA1	—
7	P42	—	—	—	—	—	—	—	—	—	TI04/ TO04	—	—	—	TxDA1	—
8	P41	—	—	—	—	—	—	—	—	—	TI07/ TO07	—	—	—	RxDA1	—
9	P40	—	—	TOOL0	—	—	—	—	—	—	—	—	—	—	—	—
10	—	—	—	$\overline{\text{RESET}}$	—	—	—	—	—	—	—	—	—	—	—	—
11	P124	—	—	XT2/ EXCLKS	—	—	—	—	—	—	—	—	—	—	—	—
12	P123	—	—	XT1	—	—	—	—	—	—	—	—	—	—	—	—
13	P137	—	EI137	—	—	—	—	INTP0	—	—	—	—	—	—	—	—
14	P122	—	EI122	X2/EXCLK	—	—	—	—	—	—	—	—	—	—	—	—
15	P121	—	EI121	X1/VBAT	—	—	—	—	—	—	—	—	—	—	—	—
16	—	—	—	REGC	—	—	—	—	—	—	—	—	—	—	—	—
17	—	—	—	V_{SS}	—	—	—	—	—	—	—	—	—	—	—	—
18	—	—	—	EV_{SS0}	—	—	—	—	—	—	—	—	—	—	—	—
19	—	—	—	V_{DD}	—	—	—	—	—	—	—	—	—	—	—	—
20	—	—	—	EV_{DD0}	—	—	—	—	—	—	—	—	—	—	—	—
21	P60	CCD04	EO60	—	—	—	—	—	—	—	—	—	—	SCLA0	—	—
22	P61	CCD05	EO61	—	—	—	—	—	—	—	—	—	—	SDAA0	—	—
23	P62	CCD06	—	—	—	—	—	—	—	—	—	—	—	SCLA1	—	—
24	P63	CCD07	—	—	—	—	—	—	—	—	—	—	—	SDAA1	—	—
25	P31	—	EI31	(PCLBUZ0)	—	—	—	INTP4	—	TS01	TI03/ TO03	—	—	—	—	—
26	P64	—	—	—	—	—	—	—	—	TS12	TI10/ TO10	—	—	—	—	—
27	P65	—	—	—	—	—	—	—	—	TS13	TI11/ TO11	—	—	—	—	—
28	P66	—	—	—	—	—	—	—	—	TS14	TI12/ TO12	—	—	—	—	—
29	P67	—	—	—	—	—	—	—	—	TS15	TI13/ TO13	—	—	—	—	—
30	P77	—	—	—	—	—	—	INTP11	KR7	TS09	—	—	(TxD2)	—	—	—
31	P76	—	—	—	—	—	—	INTP10	KR6	TS08	—	—	(RxD2)	—	—	—
32	P75	—	—	—	—	—	—	INTP9	KR5	TS07	—	—	—	—	—	—

Downloaded from Arrow.com.

Table 1 - 11 Multiplexed Pin Functions of the 80-pin Products (2/3)

Pin Number	I/O			Power supply, system clock, and debugging	Analog Circuits			HMIs			Timers		Communications Interfaces			
80LFQFP, 80LQFP	Digital port	Controlled current drive port	ELCL input/output port		A/D converter (ADC)	D/A converter (DAC)	Comparator (CMP)	Interrupt	Key interrupt	Capacitive sensing unit (CTSU2L)	Timer array unit (TAU)	Realtime Clock (RTC)	Serial array unit (SAU)	Serial interface IICA (IICA)	Serial interface UARTA (UARTA)	Remote control signal receiver (REMC)
33	P74	—	—	—	—	—	—	INTP8	KR4	TS06	—	—	—	—	—	—
34	P73	—	—	—	—	—	—	—	KR3	TS05	—	—	—	—	—	—
35	P72	—	—	—	—	—	—	—	KR2	TS04	—	—	SO21	—	TxDA0	—
36	P71	—	—	—	—	—	—	—	KR1	TS03	—	—	SI21/ SDA21	—	RxDA0	—
37	P70	—	—	—	—	—	—	—	KR0	TS02	—	—	SCK21/ SCL21	—	—	RIN0
38	P06	—	—	—	—	—	—	—	—	TS11	TI06/ TO06	—	—	—	CLKA0	—
39	P05	—	—	—	—	—	—	—	—	TS10	TI05/ TO05	—	—	—	—	—
40	P30	—	EI30	—	—	—	VCOUT0	INTP3	—	TSCAP	—	RTC1HZ	SCK11/ SCL11	—	—	—
41	P50	CCD03	EI50/ EO50	—	—	—	—	INTP1	—	TS00	—	—	SI11/ SDA11	—	—	—
42	P51	CCD02	EI51/ EO51	—	—	—	—	INTP2	—	—	—	—	SO11	—	—	—
43	P52	—	—	—	—	—	—	—	—	—	—	—	SO31	—	—	—
44	P53	—	—	—	—	—	—	—	—	—	—	—	SI31/ SDA31	—	—	—
45	P54	—	—	—	—	—	—	—	—	—	—	—	SCK31/ SCL31	—	—	—
46	P55	—	—	(PCLBUZ1)	—	—	—	—	—	—	—	—	(SCK00)	—	—	—
47	P17	CCD01	EO17	—	—	—	—	—	—	—	TI02/ TO02	—	(SO00)/ (TxD0)	—	—	—
48	P16	CCD00	EO16	—	—	—	—	INTP5	—	—	TI01/ TO01	—	(SI00)/ (RxD0)	—	—	—
49	P15	—	EO15	—	—	—	—	—	—	—	(TI02)/ (TO02)	—	SCK20/ SCL20	—	—	—
50	P14	—	EO14	—	—	—	VCOUT1	—	—	—	(TI03)/ (TO03)	—	SI20/ RxD2/ SDA20	(SCLA0)	—	—
51	P13	—	EO13	—	—	—	IVREF1	—	—	—	(TI04)/ (TO04)	—	SO20/ TxD2	(SDAA0)	—	—
52	P12	—	EI12/ EO12	TOOLTxD	—	—	—	(INTP5)	—	—	(TI05)/ (TO05)	—	SO00/ TxD0	—	—	—
53	P11	—	EI11/ EO11	TOOLRxD	—	—	—	—	—	—	(TI06)/ (TO06)	—	SI00/ RxD0/ SDA00	—	—	—
54	P10	—	EI10/ EO10	—	—	—	—	—	—	—	(TI07)/ (TO07)	—	SCK00/ SCL00	—	—	—
55	P110	—	—	—	—	—	—	(INTP10)	—	—	—	—	—	—	—	—
56	P111	—	—	—	—	—	—	(INTP11)	—	—	—	—	—	—	—	—
57	P146	—	—	—	—	—	—	—	—	—	—	—	—	—	—	—
58	P147	—	EI147	—	ANI18	—	IVCMP0	—	—	—	—	—	—	—	—	—
59	P100	—	—	—	ANI20	—	—	—	—	—	—	—	—	—	—	—
60	P153	—	—	—	ANI11	—	—	—	—	TS33	—	—	—	—	—	—

Downloaded from Arrow.com.

Table 1 - 11 Multiplexed Pin Functions of the 80-pin Products (3/3)

Pin Number	I/O			Power supply, system clock, and debugging	Analog Circuits			HMIs			Timers		Communications Interfaces			
80LFQFP, 80LQFP	Digital port	Controlled current drive port	ELCL input/output port		A/D converter (ADC)	D/A converter (DAC)	Comparator (CMP)	Interrupt	Key interrupt	Capacitive sensing unit (CTSU2L)	Timer array unit (TAU)	Realtime Clock (RTC)	Serial array unit (SAU)	Serial interface IICA (IICA)	Serial interface UARTA (UARTA)	Remote control signal receiver (REMC)
61	P152	—	—	—	ANI10	—	—	—	—	TS32	—	—	—	—	—	—
62	P151	—	—	—	ANI9	—	—	—	—	TS31	—	—	—	—	—	—
63	P150	—	—	—	ANI8	—	—	—	—	TS30	—	—	—	—	—	—
64	P27	—	—	—	ANI7	—	—	—	—	TS25	—	—	—	—	—	—
65	P26	—	—	—	ANI6	—	—	—	—	TS24	—	—	—	—	—	—
66	P25	—	—	—	ANI5	—	—	—	—	TS23	—	—	—	—	—	—
67	P24	—	—	—	ANI4	—	—	—	—	TS22	—	—	—	—	—	—
68	P23	—	EI23	—	ANI3	ANO1	IVREF0	—	—	TS21	—	—	—	—	—	—
69	P22	—	EI22	—	ANI2	ANO0	—	—	—	TS20	—	—	—	—	—	—
70	P21	—	EI21	—	ANI1/ AVREFM	—	—	—	—	—	—	—	—	—	—	—
71	P20	—	EI20	—	ANI0/ AVREFP	—	—	—	—	—	—	—	—	—	—	—
72	P130	—	—	—	—	—	—	—	—	—	—	—	—	—	—	—
73	P04	—	—	—	—	—	—	—	—	—	—	—	SCK10/ SCL10	—	—	—
74	P03	—	—	—	ANI16	—	—	—	—	TS29	—	—	SI10/ RxD1/ SDA10	—	—	—
75	P02	—	—	—	ANI17	—	—	—	—	TS28	—	—	SO10/ TxD1	—	—	—
76	P01	—	EI01/ EO01	—	—	—	—	—	—	TS27	TO00	—	—	—	—	—
77	P00	—	EI00	—	—	—	—	—	—	TS26	TI00	—	—	—	—	—
78	P144	—	—	—	—	—	—	—	—	—	—	—	SO30/ TxD3	—	—	—
79	P143	—	—	—	—	—	—	—	—	—	—	—	SI30/ RxD3/ SDA30	—	—	—
80	P142	—	—	—	—	—	—	—	—	—	—	—	SCK30/ SCL30	—	—	—

Downloaded from Arrow.com.

1.3.10 100-pin products

- 100-pin plastic LFQFP (14 × 14 mm, 0.50-mm pitch)

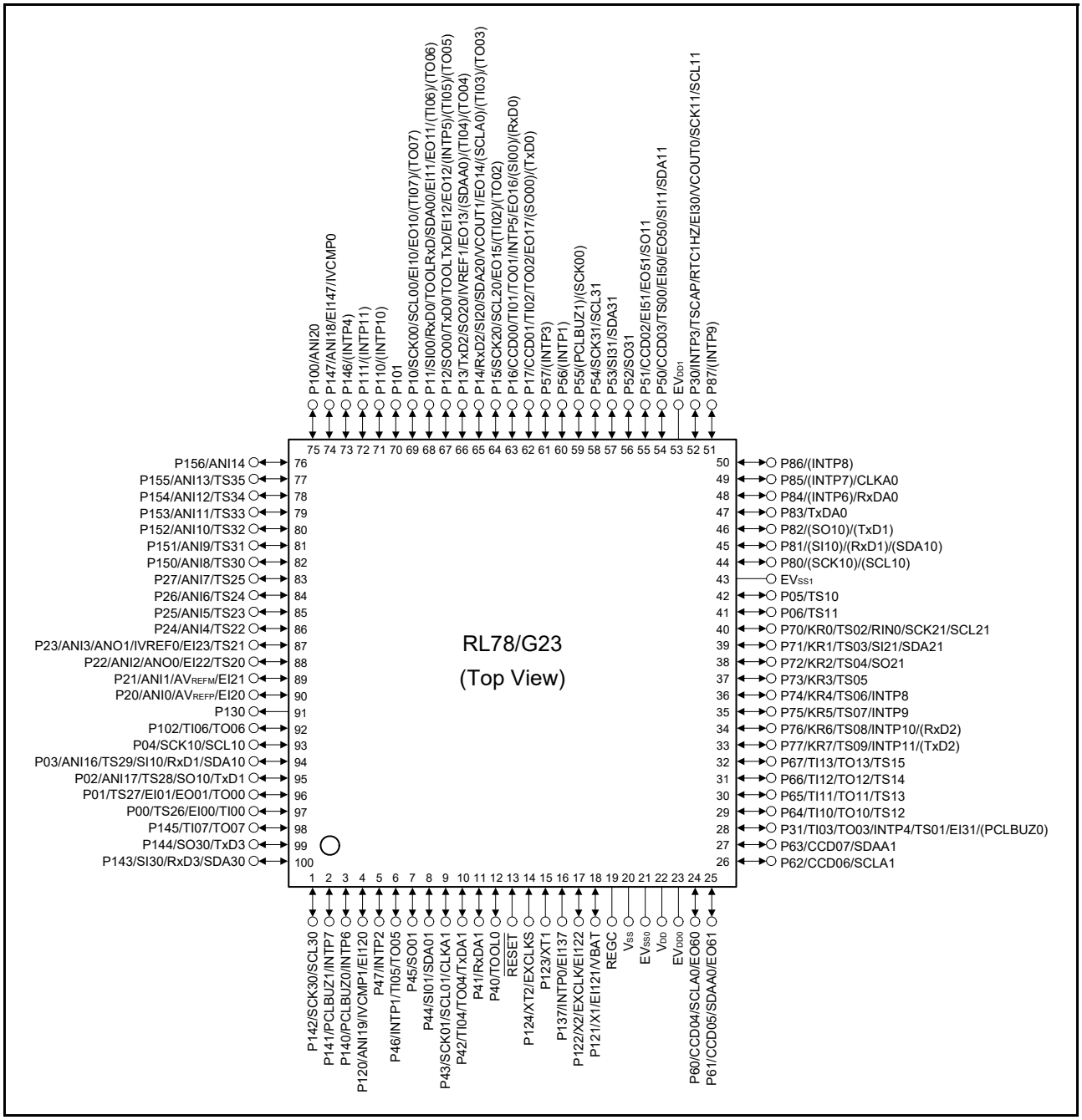

Caution 1. Connect the EV_{SS0} and EV_{SS1} pins to the same ground as the V_{SS} pin.

Caution 2. Make sure that the voltage on the V_{DD} pin is no less than that on the EV_{DD0} and EV_{DD1} pins. Also make sure that the voltage on the EV_{DD0} is the same as that on the EV_{DD1} pin.

Caution 3. Connect the REGC pin to V_{SS} via a capacitor (0.47 to 1 μF).

Remark 1. For pin identification, see **1.4 Pin Identification**.

Remark 2. When using the microcontroller for an application where the noise generated inside the microcontroller must be reduced, it is recommended to supply separate powers to the V_{DD}, EV_{DD0}, and EV_{DD1} pins and connect the V_{SS}, EV_{SS0}, and EV_{SS1} pins to separate ground lines.

Remark 3. Functions in parentheses in the above figure can be assigned via settings in the peripheral I/O redirection register (PIOR). For details, see **4.3.10 Peripheral I/O redirection register (PIOR)** in the RL78/G23 User's Manual.

Downloaded from Arrow.com.

Table 1 - 12 Multiplexed Pin Functions of the 100-pin Products (1/4)

Pin Number	I/O			Power supply, system clock, and debugging	Analog Circuits			HMIs			Timers		Communications Interfaces			
100LFQFP	Digital port	Controlled current drive port	ELCL input/output port		A/D converter (ADC)	D/A converter (DAC)	Comparator (CMP)	Interrupt	Key interrupt	Capacitive sensing unit (CTSU2L)	Timer array unit (TAU)	Realtime Clock (RTC)	Serial array unit (SAU)	Serial interface IICA (IICA)	Serial interface UARTA (UARTA)	Remote control signal receiver (REMC)
1	P142	—	—	—	—	—	—	—	—	—	—	—	SCK30/ SCL30	—	—	—
2	P141	—	—	PCLBUZ1	—	—	—	INTP7	—	—	—	—	—	—	—	—
3	P140	—	—	PCLBUZ0	—	—	—	INTP6	—	—	—	—	—	—	—	—
4	P120	—	EI120	—	ANI19	—	IVCMP1	—	—	—	—	—	—	—	—	—
5	P47	—	—	—	—	—	—	INTP2	—	—	—	—	—	—	—	—
6	P46	—	—	—	—	—	—	INTP1	—	—	TI05/ TO05	—	—	—	—	—
7	P45	—	—	—	—	—	—	—	—	—	—	—	SO01	—	—	—
8	P44	—	—	—	—	—	—	—	—	—	—	—	SI01/ SDA01	—	—	—
9	P43	—	—	—	—	—	—	—	—	—	—	—	SCK01/ SCL01	—	CLKA1	—
10	P42	—	—	—	—	—	—	—	—	—	TI04/ TO04	—	—	—	TxDA1	—
11	P41	—	—	—	—	—	—	—	—	—	—	—	—	—	RxDA1	—
12	P40	—	—	TOOL0	—	—	—	—	—	—	—	—	—	—	—	—
13	—	—	—	$\overline{\text{RESET}}$	—	—	—	—	—	—	—	—	—	—	—	—
14	P124	—	—	XT2/ EXCLKS	—	—	—	—	—	—	—	—	—	—	—	—
15	P123	—	—	XT1	—	—	—	—	—	—	—	—	—	—	—	—
16	P137	—	EI137	—	—	—	—	INTP0	—	—	—	—	—	—	—	—
17	P122	—	EI122	X2/EXCLK	—	—	—	—	—	—	—	—	—	—	—	—
18	P121	—	EI121	X1/VBAT	—	—	—	—	—	—	—	—	—	—	—	—
19	—	—	—	REGC	—	—	—	—	—	—	—	—	—	—	—	—
20	—	—	—	V_{SS}	—	—	—	—	—	—	—	—	—	—	—	—
21	—	—	—	EV_{SS0}	—	—	—	—	—	—	—	—	—	—	—	—
22	—	—	—	V_{DD}	—	—	—	—	—	—	—	—	—	—	—	—
23	—	—	—	EV_{DD0}	—	—	—	—	—	—	—	—	—	—	—	—
24	P60	CCD04	EO60	—	—	—	—	—	—	—	—	—	—	SCLA0	—	—
25	P61	CCD05	EO61	—	—	—	—	—	—	—	—	—	—	SDAA0	—	—
26	P62	CCD06	—	—	—	—	—	—	—	—	—	—	—	SCLA1	—	—
27	P63	CCD07	—	—	—	—	—	—	—	—	—	—	—	SDAA1	—	—
28	P31	—	EI31	(PCLBUZ0)	—	—	—	INTP4	—	TS01	TI03/ TO03	—	—	—	—	—
29	P64	—	—	—	—	—	—	—	—	TS12	TI10/ TO10	—	—	—	—	—
30	P65	—	—	—	—	—	—	—	—	TS13	TI11/ TO11	—	—	—	—	—
31	P66	—	—	—	—	—	—	—	—	TS14	TI12/ TO12	—	—	—	—	—

Downloaded from Arrow.com.

Table 1 - 12 Multiplexed Pin Functions of the 100-pin Products (2/4)

Pin Number	I/O			Power supply, system clock, and debugging	Analog Circuits			HMIs			Timers		Communications Interfaces			
100LFQFP	Digital port	Controlled current drive port	ELCL input/output port		A/D converter (ADC)	D/A converter (DAC)	Comparator (CMP)	Interrupt	Key interrupt	Capacitive sensing unit (CTSU2L)	Timer array unit (TAU)	Realtime Clock (RTC)	Serial array unit (SAU)	Serial interface IICA (IICA)	Serial interface UARTA (UARTA)	Remote control signal receiver (REMC)
32	P67	—	—	—	—	—	—	—	—	TS15	TI13/ TO13	—	—	—	—	—
33	P77	—	—	—	—	—	—	INTP11	KR7	TS09	—	—	(TxD2)	—	—	—
34	P76	—	—	—	—	—	—	INTP10	KR6	TS08	—	—	(RxD2)	—	—	—
35	P75	—	—	—	—	—	—	INTP9	KR5	TS07	—	—	—	—	—	—
36	P74	—	—	—	—	—	—	INTP8	KR4	TS06	—	—	—	—	—	—
37	P73	—	—	—	—	—	—	—	KR3	TS05	—	—	—	—	—	—
38	P72	—	—	—	—	—	—	—	KR2	TS04	—	—	SO21	—	—	—
39	P71	—	—	—	—	—	—	—	KR1	TS03	—	—	SI21/ SDA21	—	—	—
40	P70	—	—	—	—	—	—	—	KR0	TS02	—	—	SCK21/ SCL21	—	—	RIN0
41	P06	—	—	—	—	—	—	—	—	TS11	—	—	—	—	—	—
42	P05	—	—	—	—	—	—	—	—	TS10	—	—	—	—	—	—
43	—	—	—	EV_{SS1}	—	—	—	—	—	—	—	—	—	—	—	—
44	P80	—	—	—	—	—	—	—	—	—	—	—	(SCK10)/ (SCL10)	—	—	—
45	P81	—	—	—	—	—	—	—	—	—	—	—	(SI10)/ (RxD1)/ (SDA10)	—	—	—
46	P82	—	—	—	—	—	—	—	—	—	—	—	(SO10)/ (TxD1)	—	—	—
47	P83	—	—	—	—	—	—	—	—	—	—	—	—	—	TxDA0	—
48	P84	—	—	—	—	—	—	(INTP6)	—	—	—	—	—	—	RxDA0	—
49	P85	—	—	—	—	—	—	(INTP7)	—	—	—	—	—	—	CLKA0	—
50	P86	—	—	—	—	—	—	(INTP8)	—	—	—	—	—	—	—	—
51	P87	—	—	—	—	—	—	(INTP9)	—	—	—	—	—	—	—	—
52	P30	—	EI30	—	—	—	VCOUT0	INTP3	—	TSCAP	—	RTC1HZ	SCK11/ SCL11	—	—	—
53	—	—	—	EV_{DD1}	—	—	—	—	—	—	—	—	—	—	—	—
54	P50	CCD03	EI50/ EO50	—	—	—	—	—	—	TS00	—	—	SI11/ SDA11	—	—	—
55	P51	CCD02	EI51/ EO51	—	—	—	—	—	—	—	—	—	SO11	—	—	—
56	P52	—	—	—	—	—	—	—	—	—	—	—	SO31	—	—	—
57	P53	—	—	—	—	—	—	—	—	—	—	—	SI31/ SDA31	—	—	—
58	P54	—	—	—	—	—	—	—	—	—	—	—	SCK31/ SCL31	—	—	—
59	P55	—	—	(PCLBUZ1)	—	—	—	—	—	—	—	—	(SCK00)	—	—	—
60	P56	—	—	—	—	—	—	(INTP1)	—	—	—	—	—	—	—	—
61	P57	—	—	—	—	—	—	(INTP3)	—	—	—	—	—	—	—	—
62	P17	CCD01	EO17	—	—	—	—	—	—	—	TI02/ TO02	—	(SO00)/ (TxD0)	—	—	—

Downloaded from Arrow.com.

Table 1 - 12 Multiplexed Pin Functions of the 100-pin Products (3/4)

Pin Number	I/O			Power supply, system clock, and debugging	Analog Circuits			HMIs			Timers		Communications Interfaces			
100LFQFP	Digital port	Controlled current drive port	ELCL input/output port		A/D converter (ADC)	D/A converter (DAC)	Comparator (CMP)	Interrupt	Key interrupt	Capacitive sensing unit (CTSU2L)	Timer array unit (TAU)	Realtime Clock (RTC)	Serial array unit (SAU)	Serial interface IICA (IICA)	Serial interface UARTA (UARTA)	Remote control signal receiver (REMC)
63	P16	CCD00	EO16	—	—	—	—	INTP5	—	—	TI01/ TO01	—	(SI00)/ (RxD0)	—	—	—
64	P15	—	EO15	—	—	—	—	—	—	—	(TI02)/ (TO02)	—	SCK20/ SCL20	—	—	—
65	P14	—	EO14	—	—	—	VCOUT1	—	—	—	(TI03)/ (TO03)	—	SI20/ RxD2/ SDA20	(SCLA0)	—	—
66	P13	—	EO13	—	—	—	IVREF1	—	—	—	(TI04)/ (TO04)	—	SO20/ TxD2	(SDAA0)	—	—
67	P12	—	EI12/ EO12	TOOLTxD	—	—	—	(INTP5)	—	—	(TI05)/ (TO05)	—	SO00/ TxD0	—	—	—
68	P11	—	EI11/ EO11	TOOLRxD	—	—	—	—	—	—	(TI06)/ (TO06)	—	SI00/ RxD0/ SDA00	—	—	—
69	P10	—	EI10/ EO10	—	—	—	—	—	—	—	(TI07)/ (TO07)	—	SCK00/ SCL00	—	—	—
70	P101	—	—	—	—	—	—	—	—	—	—	—	—	—	—	—
71	P110	—	—	—	—	—	—	(INTP10)	—	—	—	—	—	—	—	—
72	P111	—	—	—	—	—	—	(INTP11)	—	—	—	—	—	—	—	—
73	P146	—	—	—	—	—	—	(INTP4)	—	—	—	—	—	—	—	—
74	P147	—	EI147	—	ANI18	—	IVCMP0	—	—	—	—	—	—	—	—	—
75	P100	—	—	—	ANI20	—	—	—	—	—	—	—	—	—	—	—
76	P156	—	—	—	ANI14	—	—	—	—	—	—	—	—	—	—	—
77	P155	—	—	—	ANI13	—	—	—	—	TS35	—	—	—	—	—	—
78	P154	—	—	—	ANI12	—	—	—	—	TS34	—	—	—	—	—	—
79	P153	—	—	—	ANI11	—	—	—	—	TS33	—	—	—	—	—	—
80	P152	—	—	—	ANI10	—	—	—	—	TS32	—	—	—	—	—	—
81	P151	—	—	—	ANI9	—	—	—	—	TS31	—	—	—	—	—	—
82	P150	—	—	—	ANI8	—	—	—	—	TS30	—	—	—	—	—	—
83	P27	—	—	—	ANI7	—	—	—	—	TS25	—	—	—	—	—	—
84	P26	—	—	—	ANI6	—	—	—	—	TS24	—	—	—	—	—	—
85	P25	—	—	—	ANI5	—	—	—	—	TS23	—	—	—	—	—	—
86	P24	—	—	—	ANI4	—	—	—	—	TS22	—	—	—	—	—	—
87	P23	—	EI23	—	ANI3	ANO1	IVREF0	—	—	TS21	—	—	—	—	—	—
88	P22	—	EI22	—	ANI2	ANO0	—	—	—	TS20	—	—	—	—	—	—
89	P21	—	EI21	—	ANI1/ AVREFM	—	—	—	—	—	—	—	—	—	—	—
90	P20	—	EI20	—	ANI0/ AVREFP	—	—	—	—	—	—	—	—	—	—	—
91	P130	—	—	—	—	—	—	—	—	—	—	—	—	—	—	—
92	P102	—	—	—	—	—	—	—	—	—	TI06/ TO06	—	—	—	—	—
93	P04	—	—	—	—	—	—	—	—	—	—	—	SCK10/ SCL10	—	—	—

Downloaded from Arrow.com.

Table 1 - 12 Multiplexed Pin Functions of the 100-pin Products (4/4)

Pin Number	I/O			Power supply, system clock, and debugging	Analog Circuits			HMIs			Timers		Communications Interfaces			
100LFQFP	Digital port	Controlled current drive port	ELCL input/output port		A/D converter (ADC)	D/A converter (DAC)	Comparator (CMP)	Interrupt	Key interrupt	Capacitive sensing unit (CTSU2L)	Timer array unit (TAU)	Realtime Clock (RTC)	Serial array unit (SAU)	Serial interface IICA (IICA)	Serial interface UARTA (UARTA)	Remote control signal receiver (REMC)
94	P03	—	—	—	ANI16	—	—	—	—	TS29	—	—	SI10/ RxD1/ SDA10	—	—	—
95	P02	—	—	—	ANI17	—	—	—	—	TS28	—	—	SO10/ TxD1	—	—	—
96	P01	—	EI01/ EO01	—	—	—	—	—	—	TS27	TO00	—	—	—	—	—
97	P00	—	EI00	—	—	—	—	—	—	TS26	TI00	—	—	—	—	—
98	P145	—	—	—	—	—	—	—	—	—	TI07/ TO07	—	—	—	—	—
99	P144	—	—	—	—	—	—	—	—	—	—	—	SO30/ TxD3	—	—	—
100	P143	—	—	—	—	—	—	—	—	—	—	—	SI30/ RxD3/ SDA30	—	—	—

Downloaded from Arrow.com.

- 100-pin plastic LQFP (14 × 20 mm, 0.65-mm pitch)

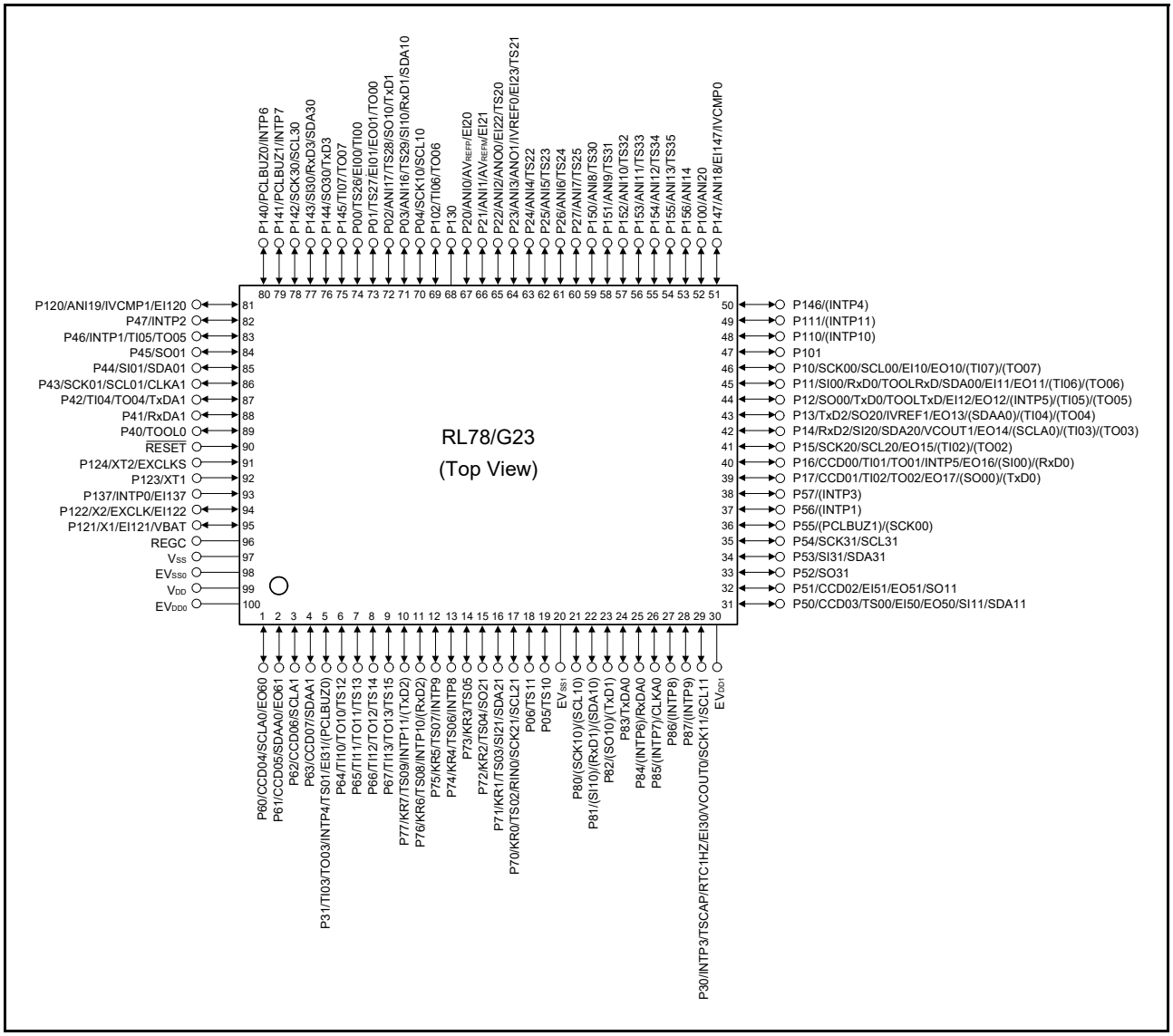

Caution 1. Connect the EV_{SS0} and EV_{SS1} pins to the same ground as the V_{SS} pin.

Caution 2. Make sure that the voltage on the V_{DD} pin is no less than that on the EV_{DD0} and EV_{DD1} pins. Also make sure that the voltage on the EV_{DD0} is the same as that on the EV_{DD1} pin.

Caution 3. Connect the REGC pin to V_{SS} via a capacitor (0.47 to 1 μF).

Remark 1. For pin identification, see **1.4 Pin Identification**.

Remark 2. When using the microcontroller for an application where the noise generated inside the microcontroller must be reduced, it is recommended to supply separate powers to the V_{DD}, EV_{DD0}, and EV_{DD1} pins and connect the V_{SS}, EV_{SS0}, and EV_{SS1} pins to separate ground lines.

Remark 3. Functions in parentheses in the above figure can be assigned via settings in the peripheral I/O redirection register (PIOR). For details, see **4.3.10 Peripheral I/O redirection register (PIOR)** in the RL78/G23 User's Manual.

Downloaded from Arrow.com.

Table 1 - 13 Multiplexed Pin Functions 2 of the 100-pin Products (1/4)

Pin Number	I/O			Power supply, system clock, and debugging	Analog Circuits			HMIs			Timers		Communications Interfaces			
100LQFP	Digital port	Controlled current drive port	ELCL input/output port		A/D converter (ADC)	D/A converter (DAC)	Comparator (CMP)	Interrupt	Key interrupt	Capacitive sensing unit (CTSU2L)	Timer array unit (TAU)	Realtime Clock (RTC)	Serial array unit (SAU)	Serial interface IICA (IICA)	Serial interface UARTA (UARTA)	Remote control signal receiver (REMC)
1	P60	CCD04	EO60	—	—	—	—	—	—	—	—	—	—	SCLA0	—	—
2	P61	CCD05	EO61	—	—	—	—	—	—	—	—	—	—	SDAA0	—	—
3	P62	CCD06	—	—	—	—	—	—	—	—	—	—	—	SCLA1	—	—
4	P63	CCD07	—	—	—	—	—	—	—	—	—	—	—	SDAA1	—	—
5	P31	—	EI31	(PCLBUZ0)	—	—	—	INTP4	—	TS01	TI03/ TO03	—	—	—	—	—
6	P64	—	—	—	—	—	—	—	—	TS12	TI10/ TO10	—	—	—	—	—
7	P65	—	—	—	—	—	—	—	—	TS13	TI11/ TO11	—	—	—	—	—
8	P66	—	—	—	—	—	—	—	—	TS14	TI12/ TO12	—	—	—	—	—
9	P67	—	—	—	—	—	—	—	—	TS15	TI13/ TO13	—	—	—	—	—
10	P77	—	—	—	—	—	—	INTP11	KR7	TS09	—	—	(TxD2)	—	—	—
11	P76	—	—	—	—	—	—	INTP10	KR6	TS08	—	—	(RxD2)	—	—	—
12	P75	—	—	—	—	—	—	INTP9	KR5	TS07	—	—	—	—	—	—
13	P74	—	—	—	—	—	—	INTP8	KR4	TS06	—	—	—	—	—	—
14	P73	—	—	—	—	—	—	—	KR3	TS05	—	—	—	—	—	—
15	P72	—	—	—	—	—	—	—	KR2	TS04	—	—	SO21	—	—	—
16	P71	—	—	—	—	—	—	—	KR1	TS03	—	—	SI21/ SDA21	—	—	—
17	P70	—	—	—	—	—	—	—	KR0	TS02	—	—	SCK21/ SCL21	—	—	RIN0
18	P06	—	—	—	—	—	—	—	—	TS11	—	—	—	—	—	—
19	P05	—	—	—	—	—	—	—	—	TS10	—	—	—	—	—	—
20	—	—	—	EV_{SS1}	—	—	—	—	—	—	—	—	—	—	—	—
21	P80	—	—	—	—	—	—	—	—	—	—	—	(SCK10)/ (SCL10)	—	—	—
22	P81	—	—	—	—	—	—	—	—	—	—	—	(SI10)/ (RxD1)/ (SDA10)	—	—	—
23	P82	—	—	—	—	—	—	—	—	—	—	—	(SO10)/ (TxD1)	—	—	—
24	P83	—	—	—	—	—	—	—	—	—	—	—	—	—	TxDA0	—
25	P84	—	—	—	—	—	—	(INTP6)	—	—	—	—	—	—	RxDA0	—
26	P85	—	—	—	—	—	—	(INTP7)	—	—	—	—	—	—	CLKA0	—
27	P86	—	—	—	—	—	—	(INTP8)	—	—	—	—	—	—	—	—
28	P87	—	—	—	—	—	—	(INTP9)	—	—	—	—	—	—	—	—
29	P30	—	EI30	—	—	—	VCOUT0	INTP3	—	TSCAP	—	RTC1HZ	SCK11/ SCL11	—	—	—
30	—	—	—	EV_{DD1}	—	—	—	—	—	—	—	—	—	—	—	—

Downloaded from Arrow.com.

Table 1 - 13 Multiplexed Pin Functions 2 of the 100-pin Products (2/4)

Pin Number	I/O			Power supply, system clock, and debugging	Analog Circuits			HMIs			Timers		Communications Interfaces			
100LQFP	Digital port	Controlled current drive port	ELCL input/output port		A/D converter (ADC)	D/A converter (DAC)	Comparator (CMP)	Interrupt	Key interrupt	Capacitive sensing unit (CTSU2L)	Timer array unit (TAU)	Realtime Clock (RTC)	Serial array unit (SAU)	Serial interface IICA (IICA)	Serial interface UARTA (UARTA)	Remote control signal receiver (REMC)
31	P50	CCD03	EI50/ EO50	—	—	—	—	—	—	TS00	—	—	SI11/ SDA11	—	—	—
32	P51	CCD02	EI51/ EO51	—	—	—	—	—	—	—	—	—	SO11	—	—	—
33	P52	—	—	—	—	—	—	—	—	—	—	—	SO31	—	—	—
34	P53	—	—	—	—	—	—	—	—	—	—	—	SI31/ SDA31	—	—	—
35	P54	—	—	—	—	—	—	—	—	—	—	—	SCK31/ SCL31	—	—	—
36	P55	—	—	(PCLBUZ1)	—	—	—	—	—	—	—	—	(SCK00)	—	—	—
37	P56	—	—	—	—	—	—	(INTP1)	—	—	—	—	—	—	—	—
38	P57	—	—	—	—	—	—	(INTP3)	—	—	—	—	—	—	—	—
39	P17	CCD01	EO17	—	—	—	—	—	—	—	TI02/ TO02	—	(SO00)/ (TxD0)	—	—	—
40	P16	CCD00	EO16	—	—	—	—	INTP5	—	—	TI01/ TO01	—	(SI00)/ (RxD0)	—	—	—
41	P15	—	EO15	—	—	—	—	—	—	—	(TI02)/ (TO02)	—	SCK20/ SCL20	—	—	—
42	P14	—	EO14	—	—	—	VCOUT1	—	—	—	(TI03)/ (TO03)	—	SI20/ RxD2/ SDA20	(SCLA0)	—	—
43	P13	—	EO13	—	—	—	IVREF1	—	—	—	(TI04)/ (TO04)	—	SO20/ TxD2	(SDAA0)	—	—
44	P12	—	EI12/ EO12	TOOLTxD	—	—	—	(INTP5)	—	—	(TI05)/ (TO05)	—	SO00/ TxD0	—	—	—
45	P11	—	EI11/ EO11	TOOLRxD	—	—	—	—	—	—	(TI06)/ (TO06)	—	SI00/ RxD0/ SDA00	—	—	—
46	P10	—	EI10/ EO10	—	—	—	—	—	—	—	(TI07)/ (TO07)	—	SCK00/ SCL00	—	—	—
47	P101	—	—	—	—	—	—	—	—	—	—	—	—	—	—	—
48	P110	—	—	—	—	—	—	(INTP10)	—	—	—	—	—	—	—	—
49	P111	—	—	—	—	—	—	(INTP11)	—	—	—	—	—	—	—	—
50	P146	—	—	—	—	—	—	(INTP4)	—	—	—	—	—	—	—	—
51	P147	—	EI147	—	ANI18	—	IVCMP0	—	—	—	—	—	—	—	—	—
52	P100	—	—	—	ANI20	—	—	—	—	—	—	—	—	—	—	—
53	P156	—	—	—	ANI14	—	—	—	—	—	—	—	—	—	—	—
54	P155	—	—	—	ANI13	—	—	—	—	TS35	—	—	—	—	—	—
55	P154	—	—	—	ANI12	—	—	—	—	TS34	—	—	—	—	—	—
56	P153	—	—	—	ANI11	—	—	—	—	TS33	—	—	—	—	—	—
57	P152	—	—	—	ANI10	—	—	—	—	TS32	—	—	—	—	—	—
58	P151	—	—	—	ANI9	—	—	—	—	TS31	—	—	—	—	—	—
59	P150	—	—	—	ANI8	—	—	—	—	TS30	—	—	—	—	—	—
60	P27	—	—	—	ANI7	—	—	—	—	TS25	—	—	—	—	—	—

Downloaded from Arrow.com.

Table 1 - 13 Multiplexed Pin Functions 2 of the 100-pin Products (3/4)

Pin Number	I/O			Power supply, system clock, and debugging	Analog Circuits			HMIs			Timers		Communications Interfaces			
100LQFP	Digital port	Controlled current drive port	ELCL input/output port		A/D converter (ADC)	D/A converter (DAC)	Comparator (CMP)	Interrupt	Key interrupt	Capacitive sensing unit (CTSU2L)	Timer array unit (TAU)	Realtime Clock (RTC)	Serial array unit (SAU)	Serial interface IICA (IICA)	Serial interface UARTA (UARTA)	Remote control signal receiver (REMC)
61	P26	—	—	—	ANI6	—	—	—	—	TS24	—	—	—	—	—	—
62	P25	—	—	—	ANI5	—	—	—	—	TS23	—	—	—	—	—	—
63	P24	—	—	—	ANI4	—	—	—	—	TS22	—	—	—	—	—	—
64	P23	—	EI23	—	ANI3	ANO1	IVREF0	—	—	TS21	—	—	—	—	—	—
65	P22	—	EI22	—	ANI2	ANO0	—	—	—	TS20	—	—	—	—	—	—
66	P21	—	EI21	—	ANI1/ AVREFM	—	—	—	—	—	—	—	—	—	—	—
67	P20	—	EI20	—	ANI0/ AVREFP	—	—	—	—	—	—	—	—	—	—	—
68	P130	—	—	—	—	—	—	—	—	—	—	—	—	—	—	—
69	P102	—	—	—	—	—	—	—	—	—	TI06/ TO06	—	—	—	—	—
70	P04	—	—	—	—	—	—	—	—	—	—	—	SCK10/ SCL10	—	—	—
71	P03	—	—	—	ANI16	—	—	—	—	TS29	—	—	SI10/ RxD1/ SDA10	—	—	—
72	P02	—	—	—	ANI17	—	—	—	—	TS28	—	—	SO10/ TxD1	—	—	—
73	P01	—	EI01/ EO01	—	—	—	—	—	—	TS27	TO00	—	—	—	—	—
74	P00	—	EI00	—	—	—	—	—	—	TS26	TI00	—	—	—	—	—
75	P145	—	—	—	—	—	—	—	—	—	TI07/ TO07	—	—	—	—	—
76	P144	—	—	—	—	—	—	—	—	—	—	—	SO30/ TxD3	—	—	—
77	P143	—	—	—	—	—	—	—	—	—	—	—	SI30/ RxD3/ SDA30	—	—	—
78	P142	—	—	—	—	—	—	—	—	—	—	—	SCK30/ SCL30	—	—	—
79	P141	—	—	PCLBUZ1	—	—	—	INTP7	—	—	—	—	—	—	—	—
80	P140	—	—	PCLBUZ0	—	—	—	INTP6	—	—	—	—	—	—	—	—
81	P120	—	EI120	—	ANI19	—	IVCMP1	—	—	—	—	—	—	—	—	—
82	P47	—	—	—	—	—	—	INTP2	—	—	—	—	—	—	—	—
83	P46	—	—	—	—	—	—	INTP1	—	—	TI05/ TO05	—	—	—	—	—
84	P45	—	—	—	—	—	—	—	—	—	—	—	SO01	—	—	—
85	P44	—	—	—	—	—	—	—	—	—	—	—	SI01/ SDA01	—	—	—
86	P43	—	—	—	—	—	—	—	—	—	—	—	SCK01/ SCL01	—	CLKA1	—
87	P42	—	—	—	—	—	—	—	—	—	TI04/ TO04	—	—	—	TxDA1	—
88	P41	—	—	—	—	—	—	—	—	—	—	—	—	—	RxDA1	—
89	P40	—	—	TOOL0	—	—	—	—	—	—	—	—	—	—	—	—

Downloaded from Arrow.com.

Table 1 - 13 Multiplexed Pin Functions 2 of the 100-pin Products (4/4)

Pin Number	I/O			Power supply, system clock, and debugging	Analog Circuits			HMIs			Timers		Communications Interfaces			
100LQFP	Digital port	Controlled current drive port	ELCL input/output port		A/D converter (ADC)	D/A converter (DAC)	Comparator (CMP)	Interrupt	Key interrupt	Capacitive sensing unit (CTSU2L)	Timer array unit (TAU)	Realtime Clock (RTC)	Serial array unit (SAU)	Serial interface IICA (IICA)	Serial interface UARTA (UARTA)	Remote control signal receiver (REMC)
90	—	—	—	$\overline{\text{RESET}}$	—	—	—	—	—	—	—	—	—	—	—	—
91	P124	—	—	XT2/ EXCLKS	—	—	—	—	—	—	—	—	—	—	—	—
92	P123	—	—	XT1	—	—	—	—	—	—	—	—	—	—	—	—
93	P137	—	EI137	—	—	—	—	INTP0	—	—	—	—	—	—	—	—
94	P122	—	EI122	X2/EXCLK	—	—	—	—	—	—	—	—	—	—	—	—
95	P121	—	EI121	X1/VBAT	—	—	—	—	—	—	—	—	—	—	—	—
96	—	—	—	REGC	—	—	—	—	—	—	—	—	—	—	—	—
97	—	—	—	V_{SS}	—	—	—	—	—	—	—	—	—	—	—	—
98	—	—	—	EV_{SS0}	—	—	—	—	—	—	—	—	—	—	—	—
99	—	—	—	V_{DD}	—	—	—	—	—	—	—	—	—	—	—	—
100	—	—	—	EV_{DD0}	—	—	—	—	—	—	—	—	—	—	—	—

Downloaded from Arrow.com.

1.3.11 128-pin products

- 128-pin plastic LFQFP (14 × 20 mm, 0.50-mm pitch)

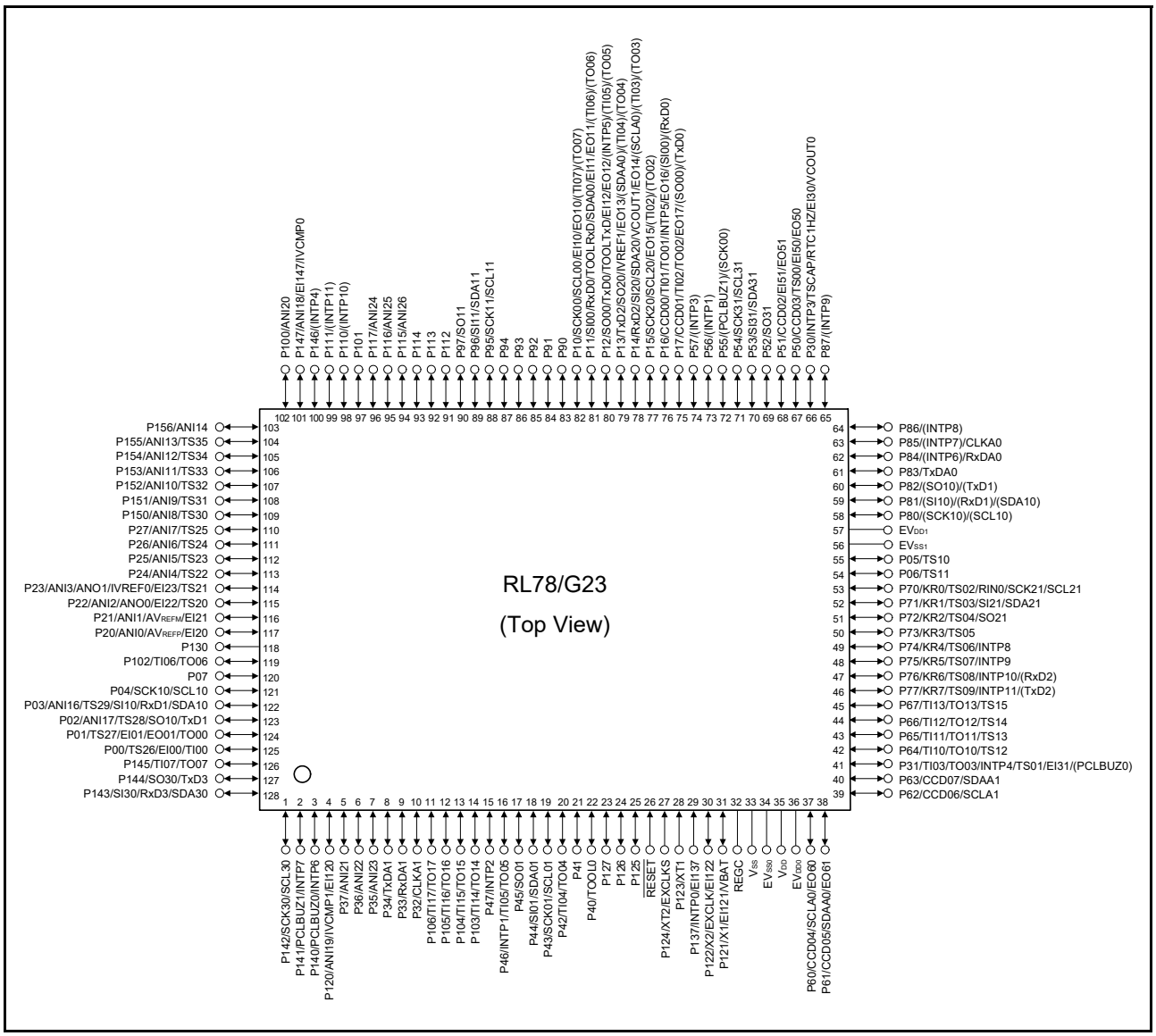

Caution 1. Connect the EV_{SS0} and EV_{SS1} pins to the same ground as the V_{SS} pin.

Caution 2. Make sure that the voltage on the V_{DD} pin is no less than that on the EV_{DD0} and EV_{DD1} pins. Also make sure that the voltage on the EV_{DD0} is the same as that on the EV_{DD1} pin.

Caution 3. Connect the REGC pin to V_{SS} via a capacitor (0.47 to 1 μF).

Remark 1. For pin identification, see **1.4 Pin Identification**.

Remark 2. When using the microcontroller for an application where the noise generated inside the microcontroller must be reduced, it is recommended to supply separate powers to the V_{DD}, EV_{DD0}, and EV_{DD1} pins and connect the V_{SS}, EV_{SS0}, and EV_{SS1} pins to separate ground lines.

Remark 3. Functions in parentheses in the above figure can be assigned via settings in the peripheral I/O redirection register (PIOR). For details, see **4.3.10 Peripheral I/O redirection register (PIOR)** in the RL78/G23 User's Manual.

Downloaded from Arrow.com.

Table 1 - 14 Multiplexed Pin Functions of the 128-pin Products (1/5)

Pin Number	I/O			Power supply, system clock, and debugging	Analog Circuits			HMIs			Timers		Communications Interfaces			
128LFQFP	Digital port	Controlled current drive port	ELCL input/output port		A/D converter (ADC)	D/A converter (DAC)	Comparator (CMP)	Interrupt	Key interrupt	Capacitive sensing unit (CTSU2L)	Timer array unit (TAU)	Realtime Clock (RTC)	Serial array unit (SAU)	Serial interface IICA (IICA)	Serial interface UARTA (UARTA)	Remote control signal receiver (REMC)
1	P142	—	—	—	—	—	—	—	—	—	—	—	SCK30/ SCL30	—	—	—
2	P141	—	—	PCLBUZ1	—	—	—	INTP7	—	—	—	—	—	—	—	—
3	P140	—	—	PCLBUZ0	—	—	—	INTP6	—	—	—	—	—	—	—	—
4	P120	—	EI120	—	ANI19	—	IVCMP1	—	—	—	—	—	—	—	—	—
5	P37	—	—	—	ANI21	—	—	—	—	—	—	—	—	—	—	—
6	P36	—	—	—	ANI22	—	—	—	—	—	—	—	—	—	—	—
7	P35	—	—	—	ANI23	—	—	—	—	—	—	—	—	—	—	—
8	P34	—	—	—	—	—	—	—	—	—	—	—	—	—	TxDA1	—
9	P33	—	—	—	—	—	—	—	—	—	—	—	—	—	RxDA1	—
10	P32	—	—	—	—	—	—	—	—	—	—	—	—	—	CLKA1	—
11	P106	—	—	—	—	—	—	—	—	—	TI17/ TO17	—	—	—	—	—
12	P105	—	—	—	—	—	—	—	—	—	TI16/ TO16	—	—	—	—	—
13	P104	—	—	—	—	—	—	—	—	—	TI15/ TO15	—	—	—	—	—
14	P103	—	—	—	—	—	—	—	—	—	TI14/ TO14	—	—	—	—	—
15	P47	—	—	—	—	—	—	INTP2	—	—	—	—	—	—	—	—
16	P46	—	—	—	—	—	—	INTP1	—	—	TI05/ TO05	—	—	—	—	—
17	P45	—	—	—	—	—	—	—	—	—	—	—	SO01	—	—	—
18	P44	—	—	—	—	—	—	—	—	—	—	—	SI01/ SDA01	—	—	—
19	P43	—	—	—	—	—	—	—	—	—	—	—	SCK01/ SCL01	—	—	—
20	P42	—	—	—	—	—	—	—	—	—	TI04/ TO04	—	—	—	—	—
21	P41	—	—	—	—	—	—	—	—	—	—	—	—	—	—	—
22	P40	—	—	TOOL0	—	—	—	—	—	—	—	—	—	—	—	—
23	P127	—	—	—	—	—	—	—	—	—	—	—	—	—	—	—
24	P126	—	—	—	—	—	—	—	—	—	—	—	—	—	—	—
25	P125	—	—	—	—	—	—	—	—	—	—	—	—	—	—	—
26	—	—	—	$\overline{\text{RESET}}$	—	—	—	—	—	—	—	—	—	—	—	—
27	P124	—	—	XT2/ EXCLKS	—	—	—	—	—	—	—	—	—	—	—	—
28	P123	—	—	XT1	—	—	—	—	—	—	—	—	—	—	—	—
29	P137	—	EI137	—	—	—	—	INTP0	—	—	—	—	—	—	—	—
30	P122	—	EI122	X2/EXCLK	—	—	—	—	—	—	—	—	—	—	—	—
31	P121	—	EI121	X1/VBAT	—	—	—	—	—	—	—	—	—	—	—	—
32	—	—	—	REGC	—	—	—	—	—	—	—	—	—	—	—	—

Downloaded from Arrow.com.

Table 1 - 14 Multiplexed Pin Functions of the 128-pin Products (2/5)

Pin Number	I/O			Power supply, system clock, and debugging	Analog Circuits			HMIs			Timers		Communications Interfaces			
128LFQFP	Digital port	Controlled current drive port	ELCL input/output port		A/D converter (ADC)	D/A converter (DAC)	Comparator (CMP)	Interrupt	Key interrupt	Capacitive sensing unit (CTSU2L)	Timer array unit (TAU)	Realtime Clock (RTC)	Serial array unit (SAU)	Serial interface IICA (IICA)	Serial interface UARTA (UARTA)	Remote control signal receiver (REMC)
33	—	—	—	V_{SS}	—	—	—	—	—	—	—	—	—	—	—	—
34	—	—	—	EV_{SS0}	—	—	—	—	—	—	—	—	—	—	—	—
35	—	—	—	V_{DD}	—	—	—	—	—	—	—	—	—	—	—	—
36	—	—	—	EV_{DD0}	—	—	—	—	—	—	—	—	—	—	—	—
37	P60	CCD04	EO60	—	—	—	—	—	—	—	—	—	—	SCLA0	—	—
38	P61	CCD05	EO61	—	—	—	—	—	—	—	—	—	—	SDAA0	—	—
39	P62	CCD06	—	—	—	—	—	—	—	—	—	—	—	SCLA1	—	—
40	P63	CCD07	—	—	—	—	—	—	—	—	—	—	—	SDAA1	—	—
41	P31	—	EI31	(PCLBUZ0)	—	—	—	INTP4	—	TS01	TI03/ TO03	—	—	—	—	—
42	P64	—	—	—	—	—	—	—	—	TS12	TI10/ TO10	—	—	—	—	—
43	P65	—	—	—	—	—	—	—	—	TS13	TI11/ TO11	—	—	—	—	—
44	P66	—	—	—	—	—	—	—	—	TS14	TI12/ TO12	—	—	—	—	—
45	P67	—	—	—	—	—	—	—	—	TS15	TI13/ TO13	—	—	—	—	—
46	P77	—	—	—	—	—	—	INTP11	KR7	TS09	—	—	(TxD2)	—	—	—
47	P76	—	—	—	—	—	—	INTP10	KR6	TS08	—	—	(RxD2)	—	—	—
48	P75	—	—	—	—	—	—	INTP9	KR5	TS07	—	—	—	—	—	—
49	P74	—	—	—	—	—	—	INTP8	KR4	TS06	—	—	—	—	—	—
50	P73	—	—	—	—	—	—	—	KR3	TS05	—	—	—	—	—	—
51	P72	—	—	—	—	—	—	—	KR2	TS04	—	—	SO21	—	—	—
52	P71	—	—	—	—	—	—	—	KR1	TS03	—	—	SI21/ SDA21	—	—	—
53	P70	—	—	—	—	—	—	—	KR0	TS02	—	—	SCK21/ SCL21	—	—	RIN0
54	P06	—	—	—	—	—	—	—	—	TS11	—	—	—	—	—	—
55	P05	—	—	—	—	—	—	—	—	TS10	—	—	—	—	—	—
56	—	—	—	EV_{SS1}	—	—	—	—	—	—	—	—	—	—	—	—
57	—	—	—	EV_{DD1}	—	—	—	—	—	—	—	—	—	—	—	—
58	P80	—	—	—	—	—	—	—	—	—	—	—	(SCK10)/ (SCL10)	—	—	—
59	P81	—	—	—	—	—	—	—	—	—	—	—	(SI10)/ (RxD1)/ (SDA10)	—	—	—
60	P82	—	—	—	—	—	—	—	—	—	—	—	(SO10)/ (TxD1)	—	—	—
61	P83	—	—	—	—	—	—	—	—	—	—	—	—	—	TxDA0	—
62	P84	—	—	—	—	—	—	(INTP6)	—	—	—	—	—	—	RxDA0	—
63	P85	—	—	—	—	—	—	(INTP7)	—	—	—	—	—	—	CLKA0	—
64	P86	—	—	—	—	—	—	(INTP8)	—	—	—	—	—	—	—	—

Downloaded from Arrow.com.

Table 1 - 14 Multiplexed Pin Functions of the 128-pin Products (3/5)

Pin Number	I/O			Power supply, system clock, and debugging	Analog Circuits			HMIs			Timers		Communications Interfaces			
128LFQFP	Digital port	Controlled current drive port	ELCL input/output port		A/D converter (ADC)	D/A converter (DAC)	Comparator (CMP)	Interrupt	Key interrupt	Capacitive sensing unit (CTSU2L)	Timer array unit (TAU)	Realtime Clock (RTC)	Serial array unit (SAU)	Serial interface IICA (IICA)	Serial interface UARTA (UARTA)	Remote control signal receiver (REMC)
65	P87	—	—	—	—	—	—	(INTP9)	—	—	—	—	—	—	—	—
66	P30	—	EI30	—	—	—	VCOUT0	INTP3	—	TSCAP	—	RTC1HZ	—	—	—	—
67	P50	CCD03	EI50/ EO50	—	—	—	—	—	—	TS00	—	—	—	—	—	—
68	P51	CCD02	EI51/ EO51	—	—	—	—	—	—	—	—	—	—	—	—	—
69	P52	—	—	—	—	—	—	—	—	—	—	—	SO31	—	—	—
70	P53	—	—	—	—	—	—	—	—	—	—	—	SI31/ SDA31	—	—	—
71	P54	—	—	—	—	—	—	—	—	—	—	—	SCK31/ SCL31	—	—	—
72	P55	—	—	(PCLBUZ1)	—	—	—	—	—	—	—	—	(SCK00)	—	—	—
73	P56	—	—	—	—	—	—	(INTP1)	—	—	—	—	—	—	—	—
74	P57	—	—	—	—	—	—	(INTP3)	—	—	—	—	—	—	—	—
75	P17	CCD01	EO17	—	—	—	—	—	—	—	TI02/ TO02	—	(SO00)/ (TxD0)	—	—	—
76	P16	CCD00	EO16	—	—	—	—	INTP5	—	—	TI01/ TO01	—	(SI00)/ (RxD0)	—	—	—
77	P15	—	EO15	—	—	—	—	—	—	—	(TI02)/ (TO02)	—	SCK20/ SCL20	—	—	—
78	P14	—	EO14	—	—	—	VCOUT1	—	—	—	(TI03)/ (TO03)	—	SI20/ RxD2/ SDA20	(SCLA0)	—	—
79	P13	—	EO13	—	—	—	IVREF1	—	—	—	(TI04)/ (TO04)	—	SO20/ TxD2	(SDAA0)	—	—
80	P12	—	EI12/ EO12	TOOLTxD	—	—	—	(INTP5)	—	—	(TI05)/ (TO05)	—	SO00/ TxD0	—	—	—
81	P11	—	EI11/ EO11	TOOLRxD	—	—	—	—	—	—	(TI06)/ (TO06)	—	SI00/ RxD0/ SDA00	—	—	—
82	P10	—	EI10/ EO10	—	—	—	—	—	—	—	(TI07)/ (TO07)	—	SCK00/ SCL00	—	—	—
83	P90	—	—	—	—	—	—	—	—	—	—	—	—	—	—	—
84	P91	—	—	—	—	—	—	—	—	—	—	—	—	—	—	—
85	P92	—	—	—	—	—	—	—	—	—	—	—	—	—	—	—
86	P93	—	—	—	—	—	—	—	—	—	—	—	—	—	—	—
87	P94	—	—	—	—	—	—	—	—	—	—	—	—	—	—	—
88	P95	—	—	—	—	—	—	—	—	—	—	—	SCK11/ SCL11	—	—	—
89	P96	—	—	—	—	—	—	—	—	—	—	—	SI11/ SDA11	—	—	—
90	P97	—	—	—	—	—	—	—	—	—	—	—	SO11	—	—	—
91	P112	—	—	—	—	—	—	—	—	—	—	—	—	—	—	—
92	P113	—	—	—	—	—	—	—	—	—	—	—	—	—	—	—
93	P114	—	—	—	—	—	—	—	—	—	—	—	—	—	—	—

Downloaded from Arrow.com.

Table 1 - 14 Multiplexed Pin Functions of the 128-pin Products (4/5)

Pin Number	I/O			Power supply, system clock, and debugging	Analog Circuits			HMIs			Timers		Communications Interfaces			
128LFQFP	Digital port	Controlled current drive port	ELCL input/output port		A/D converter (ADC)	D/A converter (DAC)	Comparator (CMP)	Interrupt	Key interrupt	Capacitive sensing unit (CTSU2L)	Timer array unit (TAU)	Realtime Clock (RTC)	Serial array unit (SAU)	Serial interface IICA (IICA)	Serial interface UARTA (UARTA)	Remote control signal receiver (REMC)
94	P115	—	—	—	ANI26	—	—	—	—	—	—	—	—	—	—	—
95	P116	—	—	—	ANI25	—	—	—	—	—	—	—	—	—	—	—
96	P117	—	—	—	ANI24	—	—	—	—	—	—	—	—	—	—	—
97	P101	—	—	—	—	—	—	—	—	—	—	—	—	—	—	—
98	P110	—	—	—	—	—	—	(INTP10)	—	—	—	—	—	—	—	—
99	P111	—	—	—	—	—	—	(INTP11)	—	—	—	—	—	—	—	—
100	P146	—	—	—	—	—	—	(INTP4)	—	—	—	—	—	—	—	—
101	P147	—	EI147	—	ANI18	—	IVCMP0	—	—	—	—	—	—	—	—	—
102	P100	—	—	—	ANI20	—	—	—	—	—	—	—	—	—	—	—
103	P156	—	—	—	ANI14	—	—	—	—	—	—	—	—	—	—	—
104	P155	—	—	—	ANI13	—	—	—	—	TS35	—	—	—	—	—	—
105	P154	—	—	—	ANI12	—	—	—	—	TS34	—	—	—	—	—	—
106	P153	—	—	—	ANI11	—	—	—	—	TS33	—	—	—	—	—	—
107	P152	—	—	—	ANI10	—	—	—	—	TS32	—	—	—	—	—	—
108	P151	—	—	—	ANI9	—	—	—	—	TS31	—	—	—	—	—	—
109	P150	—	—	—	ANI8	—	—	—	—	TS30	—	—	—	—	—	—
110	P27	—	—	—	ANI7	—	—	—	—	TS25	—	—	—	—	—	—
111	P26	—	—	—	ANI6	—	—	—	—	TS24	—	—	—	—	—	—
112	P25	—	—	—	ANI5	—	—	—	—	TS23	—	—	—	—	—	—
113	P24	—	—	—	ANI4	—	—	—	—	TS22	—	—	—	—	—	—
114	P23	—	EI23	—	ANI3	ANO1	IVREF0	—	—	TS21	—	—	—	—	—	—
115	P22	—	EI22	—	ANI2	ANO0	—	—	—	TS20	—	—	—	—	—	—
116	P21	—	EI21	—	ANI1/ AVREFM	—	—	—	—	—	—	—	—	—	—	—
117	P20	—	EI20	—	ANI0/ AVREFP	—	—	—	—	—	—	—	—	—	—	—
118	P130	—	—	—	—	—	—	—	—	—	—	—	—	—	—	—
119	P102	—	—	—	—	—	—	—	—	—	TI06/ TO06	—	—	—	—	—
120	P07	—	—	—	—	—	—	—	—	—	—	—	—	—	—	—
121	P04	—	—	—	—	—	—	—	—	—	—	—	SCK10/ SCL10	—	—	—
122	P03	—	—	—	ANI16	—	—	—	—	TS29	—	—	SI10/ RxD1/ SDA10	—	—	—
123	P02	—	—	—	ANI17	—	—	—	—	TS28	—	—	SO10/ TxD1	—	—	—
124	P01	—	EI01/ EO01	—	—	—	—	—	—	TS27	TO00	—	—	—	—	—
125	P00	—	EI00	—	—	—	—	—	—	TS26	TI00	—	—	—	—	—
126	P145	—	—	—	—	—	—	—	—	—	TI07/ TO07	—	—	—	—	—

Downloaded from Arrow.com.

Table 1 - 14 Multiplexed Pin Functions of the 128-pin Products (5/5)

Pin Number	I/O			Power supply, system clock, and debugging	Analog Circuits			HMIs			Timers		Communications Interfaces			
128LFQFP	Digital port	Controlled current drive port	ELCL input/output port		A/D converter (ADC)	D/A converter (DAC)	Comparator (CMP)	Interrupt	Key interrupt	Capacitive sensing unit (CTSU2L)	Timer array unit (TAU)	Realtime Clock (RTC)	Serial array unit (SAU)	Serial interface IICA (IICA)	Serial interface UARTA (UARTA)	Remote control signal receiver (REMC)
127	P144	—	—	—	—	—	—	—	—	—	—	—	SO30/ TxD3	—	—	—
128	P143	—	—	—	—	—	—	—	—	—	—	—	SI30/ RxD3/ SDA30	—	—	—

Downloaded from Arrow.com.

1.4 Pin Identification

ANI0 to ANI14, ANI16 to ANI26:	Analog input
ANO0, ANO1:	Analog output
AV_{REFM}:	Analog reference voltage minus
AV_{REFP}:	Analog reference voltage plus
CCD00 to CCD07:	Controlled current drive output
CLKA0, CLKA1:	Asynchronous serial clock output
EI00, EI01, EI10 to EI12, EI20 to EI23, EI30, EI31, EI50, EI51, EI120 to EI122, EI137, EI147:	Logic & event link controller input
EO01, EO10 to EO17, EO50, EO51, EO60, EO61:	Logic & event link controller output
EV_{DD0}, EV_{DD1}:	Power supply for port
EV_{SS0}, EV_{SS1}:	Ground for port
EXCLK:	External clock input (main system clock)
EXCLKS:	External clock input (subsystem clock)
INTP0 to INTP11:	Interrupt request from peripheral modules
IVCMP0, IVCMP1:	Comparator input
IVREF0, IVREF1:	Comparator reference input
KR0 to KR7:	Key return input
P00 to P07:	Port 0
P10 to P17:	Port 1
P20 to P27:	Port 2
P30 to P37:	Port 3
P40 to P47:	Port 4
P50 to P57:	Port 5
P60 to P67:	Port 6
P70 to P77:	Port 7
P80 to P87:	Port 8
P90 to P97:	Port 9
P100 to P106:	Port 10
P110 to P117:	Port 11
P120 to P127:	Port 12
P130, P137:	Port 13
P140 to P147:	Port 14
P150 to P156:	Port 15

PCLBUZ0, PCLBUZ1:	Programmable clock output/buzzer output
REGC:	Regulator capacitance
$\overline{\text{RESET}}$:	Reset
RIN0:	IR remote controller input
RTC1HZ:	Realtime clock correction clock (1 Hz) output
RxD0 to RxD3, RxDA0, RxDA1:	Receive data
SCLA0, SCLA1, SCK00, SCK01, SCK10, SCK11, SCK20, SCK21, SCK30, SCK31:	Serial clock input/output
SCL00, SCL01, SCL10, SCL11, SCL20, SCL21, SCL30, SCL31:	Serial clock output
SDAA0, SDAA1, SDA00, SDA01, SDA10, SDA11, SDA20, SDA21, SDA30, SDA31:	Serial data input/output
SI00, SI01, SI10, SI11, SI20, SI21, SI30, SI31:	Serial data input
SO00, SO01, SO10, SO11, SO20, SO21, SO30, SO31:	Serial data output
TSCAP:	Touch sensor capacitance
TI00 to TI07, TI10 to TI17:	Timer input
TO00 to TO07, TO10 to TO17:	Timer output
TOOL0:	Data input/output for tool
TOOLRxD, TOOLTxD:	Data input/output for external device
TS00 to TS15, TS20 to TS35:	Capacitive touch sensor
TxD0 to TxD3, TxDA0, TxDA1:	Transmit data
VBAT:	Battery backup power supply
VCOUT0, VCOUT1:	Comparator output
V_{DD}:	Power supply
V_{SS}:	Ground
X1, X2:	Crystal oscillator (main system clock)
XT1, XT2:	Crystal oscillator (subsystem clock)

Downloaded from Arrow.com.

1.5 Block Diagram

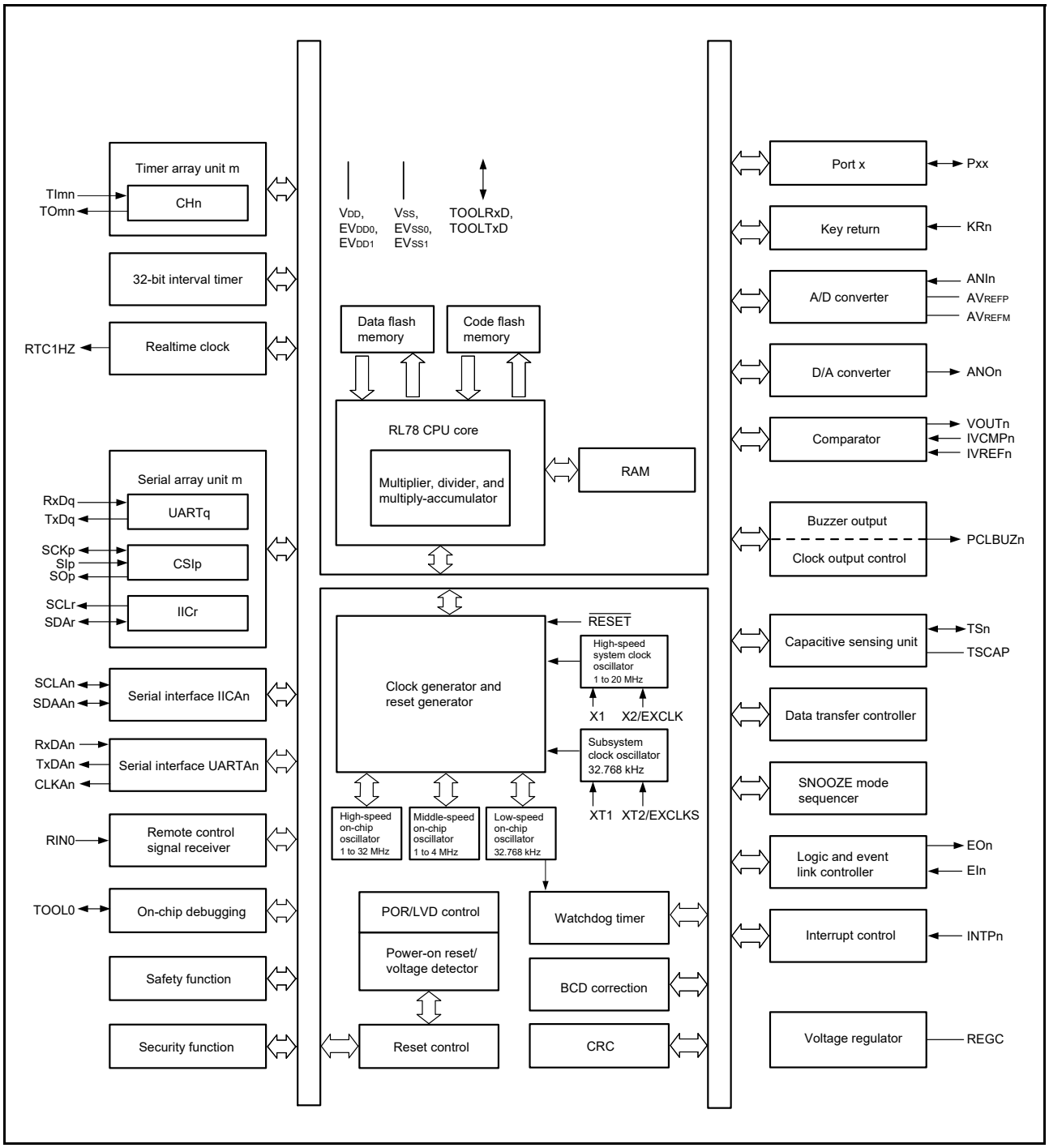

Caution 1. 32- to 128-pin products incorporate the remote control signal receiver.
Caution 2. 36- to 128-pin products incorporate the serial interface UARTAn.
Caution 3. 40- to 128-pin products incorporate the key return function.

Remark m: Unit number, n: Channel number, p: Simplified SPI (CSI) number, q: UART number, r: Simplified I²C number, xx: Port number

Downloaded from Arrow.com.

1.6 Outline of Functions

[30- to 48-pin products]

Caution This outline describes the functions at the time when the peripheral I/O redirection register (PIOR) is set to 00H.

(1/3)

Item		30-pin	32-pin	36-pin	40-pin	44-pin	48-pin
		R7F100GAx	R7F100GBx	R7F100GCx	R7F100GEx	R7F100GFx	R7F100GGx
Code flash memory		96 to 256 KB	96 to 256 KB	96 to 256 KB	96 to 256 KB	96 to 768 KB	96 to 768 KB
Data flash memory		8 KB	8 KB	8 KB	8 KB	8 KB	8 KB
RAM		12 to 24 KB	12 to 24 KB	12 to 24 KB	12 to 24 KB	12 to 48 KB	12 to 48 KB
Address space		1 MB					
CPU/ peripheral hardware clock frequency (f_{CLK})	Main system clock	HS (high-speed main) mode: 1 to 32 MHz (V_{DD} = 1.8 to 5.5 V) HS (high-speed main) mode: 1 to 4 MHz[Note 1] (V_{DD} = 1.6 to 5.5 V) LS (low-speed main) mode: 1 to 24 MHz (V_{DD} = 1.8 to 5.5 V) LS (low-speed main) mode: 1 to 4 MHz[Note 1] (V_{DD} = 1.6 to 5.5 V) LP (low-power main) mode: 1 to 2 MHz[Note 2] (V_{DD} = 1.6 to 5.5 V)					
	Subsystem clock	SUB mode: 32.768 kHz (V_{DD} = 1.6 to 5.5 V)					
Main system clock	High-speed system clock (f_{MX})	1 to 20 MHz					
	High-speed on-chip oscillator clock (f_{IH})	1 MHz, 2 MHz, 3 MHz, 4 MHz, 6 MHz, 8 MHz, 12 MHz, 16 MHz, 24 MHz, 32 MHz					
	Middle-speed on-chip oscillator clock (f_{IM})	1 MHz, 2 MHz, 4 MHz					
<R> Subsystem clock	Subsystem clock X (f_{SX})	32.768 kHz (V_{DD} = 1.6 to 5.5 V or V_{DD} = 2.4 to 5.5 V when f_{XT} is selected)			32.768 kHz (V_{DD} = 1.6 to 5.5 V)		
	Low-speed on-chip oscillator clock (f_{IL})	32.768 kHz (typ.)					
General-purpose registers		8 bits × 32 registers (8 bits × 8 registers × 4 banks)					
Minimum instruction execution time		0.03125 μs (at the 32-MHz operation with the high-speed on-chip oscillator clock (f_{IH}))					
Instruction set		• Data transfer (8/16 bits) • Adder and subtractor/logical operation (8/16 bits) • Multiplication (8 bits × 8 bits, 16 bits × 16 bits), division (16 bits ÷ 16 bits, 32 bits ÷ 32 bits) • Multiplication and accumulation (16 bits × 16 bits + 32 bits) • Rotate, barrel shift, and bit manipulation (set, reset, test, and Boolean operation), etc.					
I/O port	Total number of pins	26	28	32	36	40	44
	CMOS I/O	23 (N-ch open-drain I/O [V_{DD} withstand voltage]: 10)	24 (N-ch open-drain I/O [V_{DD} withstand voltage]: 10)	28 (N-ch open-drain I/O [V_{DD} withstand voltage]: 12)	30 (N-ch open-drain I/O [V_{DD} withstand voltage]: 12)	33 (N-ch open-drain I/O [V_{DD} withstand voltage]: 12)	36 (N-ch open-drain I/O [V_{DD} withstand voltage]: 13)
	CMOS input	1	1	1	3	3	3
	CMOS output	—	—	—	—	—	1
	N-ch open-drain I/O (withstand voltage: 6 V)	2	3	3	3	4	4
	Controlled current drive port	6	7	7	7	7	8

Downloaded from Arrow.com.

(2/3)

Item		30-pin	32-pin	36-pin	40-pin	44-pin	48-pin
		R7F100GAx	R7F100GBx	R7F100GCx	R7F100GEx	R7F100GFx	R7F100GGx
Timers	16-bit timer	8 channels					
	Watchdog timer	1 channel					
	Realtime clock (RTC)	1 channel					
	32-bit interval timer (TML32)	1 channel in 32-bit counter mode, 2 channels in 16-bit counter mode, 4 channels in 8-bit counter mode					
	Timer output	4 channels (PWM outputs: 3[Note 3]), 8 channels (PWM outputs: 7[Note 3])[Note 4]				5 channels (PWM outputs: 4[Note 3]), 8 channels (PWM outputs: 7[Note 3])[Note 4]	
	RTC output	1 channel					
Clock output/buzzer output		2 channels					
		• 3.91 kHz, 7.81 kHz, 15.63 kHz, 2 MHz, 4 MHz, 8 MHz, 16 MHz (at the 32-MHz operation with the main system clock (f_{MAIN})) • 256 Hz, 512 Hz, 1.024 kHz, 2.048 kHz, 4.096 kHz, 8.192 kHz, 16.384 kHz, 32.768 kHz (at the 32.768-kHz operation with the low-speed peripheral clock (f_{SXP}))					
8-/10-/12-bit resolution A/D converter		8 channels			9 channels	10 channels	
D/A converter		2 channels					
Comparator		2 channels					
Serial interface		[30- and 32-pin products] • Simplified SPI (CSI): 1 channel/simplified I²C: 1 channel/UART: 1 channel • Simplified SPI (CSI): 1 channel/simplified I²C: 1 channel/UART: 1 channel • Simplified SPI (CSI): 1 channel/simplified I²C: 1 channel/UART (UART supporting LIN-bus): 1 channel [36- to 44-pin products] • Simplified SPI (CSI): 1 channel/simplified I²C: 1 channel/UART: 1 channel • Simplified SPI (CSI): 1 channel/simplified I²C: 1 channel/UART: 1 channel • Simplified SPI (CSI): 2 channels/simplified I²C: 2 channels/UART (UART supporting LIN-bus): 1 channel [48-pin products] • Simplified SPI (CSI): 2 channels/simplified I²C: 2 channels/UART: 1 channel • Simplified SPI (CSI): 1 channel/simplified I²C: 1 channel/UART: 1 channel • Simplified SPI (CSI): 2 channels/simplified I²C: 2 channels/UART (UART supporting LIN-bus): 1 channel					
	UARTA	—		1 channel		2 channels	
	I²C bus	1 channel				2 channels	
Remote control signal receiver		—	1 channel				
Data transfer controller (DTC)		30 sources	30 sources	32 sources	33 sources	35 sources	36 sources
Logic and event link controller (ELCL)		1					
SNOOZE mode sequencer (SMS)		1					
Capacitive sensing unit	ROM size: 96 to 128 KB	2	3	5	6	6	8
	ROM size: 192 to 768 KB	6	7	11	13	14	16
Vectored interrupt sources	Internal	31	32	35	35	39	39
	External	6	6	6	7	7	10
Key interrupt		—			4		6

Downloaded from Arrow.com.

(3/3)

Item		30-pin	32-pin	36-pin	40-pin	44-pin	48-pin
		R7F100GAx	R7F100GBx	R7F100GCx	R7F100GEx	R7F100GFx	R7F100GGx
Reset		• Reset by $\overline{\text{RESET}}$ pin • Internal reset by watchdog timer • Internal reset by power-on-reset • Internal reset by voltage detectors (LVD0 and LVD1) • Internal reset by illegal instruction execution**Note 5** • Internal reset by RAM parity error • Internal reset by illegal-memory access					
Power-on-reset circuit		Detection voltage • 1.50 V (typ.)					
Voltage detector	LVD0	Detection voltage • Rising edge: 1.69 V to 3.96 V (6 stages) • Falling edge: 1.65 V to 3.88 V (6 stages)					
	LVD1	Detection voltage • Rising edge: 1.67 V to 4.16 V (18 stages) • Falling edge: 1.63 V to 4.08 V (18 stages)					
On-chip debugging		Available (tracing supported)					
Power supply voltage		V_{DD} = 1.6 to 5.5 V					
Operating ambient temperature		T_A = -40 to +85°C (2D: Consumer applications), T_A = -40 to +105°C (3C: Industrial applications)					

Note 1. Overwrite the flash memory during operation at 2 MHz or a lower frequency.

Note 2. When the flash memory is to be overwritten, switch to high-speed main (HS) mode or low-speed main (LS) mode.

Note 3. The number of PWM outputs varies depending on the setting of channels in use (the number of masters and slaves). For details, see **7.9.3 Operation for the multiple PWM output function** in the RL78/G23 User's Manual.

Note 4. This applies when the corresponding bit in the peripheral I/O redirection register (PIOR) is set to 1.

Note 5. In normal operation, executing the instruction code FFH triggers an internal reset, but this is not the case during emulation by the on-chip debugging emulator.

Downloaded from Arrow.com.

[52- to 128-pin products]

Caution This outline describes the functions at the time when the peripheral I/O redirection register (PIOR) is set to 00H.

(1/3)

Item		52-pin	64-pin	80-pin	100-pin	128-pin
		R7F100GJx	R7F100GLx	R7F100GMx	R7F100GPx	R7F100GSx
Code flash memory		96 to 768 KB	96 to 768 KB	128 to 768 KB	128 to 768 KB	256 to 768 KB
Data flash memory		8 KB	8 KB	8 KB	8 KB	8 KB
RAM		12 to 48 KB	12 to 48 KB	16 to 48 KB	16 to 48 KB	24 to 48 KB
Address space		1 MB				
CPU/ peripheral hardware clock frequency (f_{CLK})	Main system clock	HS (high-speed main) mode: 1 to 32 MHz (V_{DD} = 1.8 to 5.5 V) HS (high-speed main) mode: 1 to 4 MHz[Note 1] (V_{DD} = 1.6 to 5.5 V) LS (low-speed main) mode: 1 to 24 MHz (V_{DD} = 1.8 to 5.5 V) LS (low-speed main) mode: 1 to 4 MHz[Note 1] (V_{DD} = 1.6 to 5.5 V) LP (low-power main) mode: 1 to 2 MHz[Note 2] (V_{DD} = 1.6 to 5.5 V)				
	Subsystem clock	SUB mode: 32.768 kHz (V_{DD} = 1.6 to 5.5 V)				
Main system clock	High-speed system clock (f_{MX})	1 to 20 MHz				
	High-speed on-chip oscillator clock (f_{IH})	1 MHz, 2 MHz, 3 MHz, 4 MHz, 6 MHz, 8 MHz, 12 MHz, 16 MHz, 24 MHz, 32 MHz				
	Middle-speed on-chip oscillator clock (f_{IM})	1 MHz, 2 MHz, 4 MHz				
Subsystem clock	Subsystem clock X (f_{SX})	32.768 kHz (V_{DD} = 1.6 to 5.5 V)				
	Low-speed on-chip oscillator clock (f_{IL})	32.768 kHz (typ.)				
General-purpose registers		8 bits × 32 registers (8 bits × 8 registers × 4 banks)				
Minimum instruction execution time		0.03125 μs (at the 32-MHz operation with the high-speed on-chip oscillator clock (f_{IH}))				
Instruction set		• Data transfer (8/16 bits) • Adder and subtractor/logical operation (8/16 bits) • Multiplication (8 bits × 8 bits, 16 bits × 16 bits), division (16 bits ÷ 16 bits, 32 bits ÷ 32 bits) • Multiplication and accumulation (16 bits × 16 bits + 32 bits) • Rotate, barrel shift, and bit manipulation (set, reset, test, and Boolean operation), etc.				
I/O port	Total number of pins	48	58	74	92	120
	CMOS I/O	40 (N-ch open-drain I/O [V_{DD} withstand voltage]: 15)	50 (N-ch open-drain I/O [EV_{DD} withstand voltage]: 22[Note 3]/ 18[Note 4])	66 (N-ch open-drain I/O [EV_{DD} withstand voltage]: 27)	84 (N-ch open-drain I/O [EV_{DD} withstand voltage]: 31)	112 (N-ch open-drain I/O [EV_{DD} withstand voltage]: 33)
	CMOS input	3	3	3	3	3
	CMOS output	1	1	1	1	1
	N-ch open-drain I/O (withstand voltage: 6 V)	4	4	4	4	4
	Controlled current drive port	8	8	8	8	8

Downloaded from Arrow.com.

(2/3)

Item		52-pin	64-pin	80-pin	100-pin	128-pin
		R7F100GJx	R7F100GLx	R7F100GMx	R7F100GPx	R7F100GSx
Timers	16-bit timer	8 channels		12 channels		16 channels
	Watchdog timer	1 channel				
	Realtime clock (RTC)	1 channel				
	32-bit interval timer (TML32)	1 channel in 32-bit counter mode, 2 channels in 16-bit counter mode, 4 channels in 8-bit counter mode				
	Timer output	5 channels (PWM outputs: 4Note 5), 8 channels (PWM outputs: 7Note 5)Note 6	8 channels (PWM outputs: 7Note 5)	12 channels (PWM outputs: 10Note 5)		16 channels (PWM outputs: 14Note 5)
	RTC output	1 channel				
Clock output/buzzer output		2 channels				
		• 3.91 kHz, 7.81 kHz, 15.63 kHz, 2 MHz, 4 MHz, 8 MHz, 16 MHz (at the 32-MHz operation with the main system clock (f_{MAIN})) • 256 Hz, 512 Hz, 1.024 kHz, 2.048 kHz, 4.096 kHz, 8.192 kHz, 16.384 kHz, 32.768 kHz (at the 32.768-kHz operation with the low-speed peripheral clock (f_{SXP}))				
8-/10-/12-bit resolution A/D converter		12 channels	12 channels	17 channels	20 channels	26 channels
D/A converter		2 channels				
Comparator		2 channels				
Serial interfaces		[52-pin products] • Simplified SPI (CSI): 2 channels/simplified I²C: 2 channels/UART: 1 channel • Simplified SPI (CSI): 1 channel/simplified I²C: 1 channel/UART: 1 channel • Simplified SPI (CSI): 2 channels/simplified I²C: 2 channels/UART (UART supporting LIN-bus): 1 channel [64-pin products] • Simplified SPI (CSI): 2 channels/simplified I²C: 2 channels/UART: 1 channel • Simplified SPI (CSI): 2 channels/simplified I²C: 2 channels/UART: 1 channel • Simplified SPI (CSI): 2 channels/simplified I²C: 2 channels/UART (UART supporting LIN-bus): 1 channel [80- to 128-pin products] • Simplified SPI (CSI): 2 channels/simplified I²C: 2 channels/UART: 1 channel • Simplified SPI (CSI): 2 channels/simplified I²C: 2 channels/UART: 1 channel • Simplified SPI (CSI): 2 channels/simplified I²C: 2 channels/UART (UART supporting LIN-bus): 1 channel • Simplified SPI (CSI): 2 channels/simplified I²C: 2 channels/UART: 1 channel				
	UARTA	2 channels				
	I²C bus	2 channels				
Remote control signal receiver		1 channel				
Data transfer controller (DTC)		36 sources	37 sources	39 sources		
Logic and event link controller (ELCL)		1				
SNOOZE mode sequencer (SMS)		1				
Capacitive sensing unit	ROM size: 96 to 128 KB	10	12	30	32	32
	ROM size: 192 to 768 KB	20	22	30	32	32
Vectored interrupt sources	Internal	39	39	44	44	48
	External	12	13	13	13	13
Key interrupt		8				

Downloaded from Arrow.com.

(3/3)

Item		52-pin	64-pin	80-pin	100-pin	128-pin
		R7F100GJx	R7F100GLx	R7F100GMx	R7F100GPx	R7F100GSx
Reset		• Reset by $\overline{\text{RESET}}$ pin • Internal reset by watchdog timer • Internal reset by power-on-reset • Internal reset by voltage detectors (LVD0 and LVD1) • Internal reset by illegal instruction execution**Note 7** • Internal reset by RAM parity error • Internal reset by illegal-memory access				
Power-on-reset circuit		Detection voltage • 1.50 V (typ.)				
Voltage detector	LVD0	Detection voltage • Rising edge: 1.69 V to 3.96 V (6 stages) • Falling edge: 1.65 V to 3.88 V (6 stages)				
	LVD1	Detection voltage • Rising edge: 1.67 V to 4.16 V (18 stages) • Falling edge: 1.63 V to 4.08 V (18 stages)				
On-chip debugging		Available (tracing supported)				
Power supply voltage		V_{DD} = 1.6 to 5.5 V				
Operating ambient temperature		T_A = -40 to +85°C (2D: Consumer applications), T_A = -40 to +105°C (3C: Industrial applications)				

Note 1. Overwrite the flash memory during operation at 2 MHz or a lower frequency.

Note 2. When the flash memory is to be overwritten, switch to high-speed main (HS) mode or low-speed main (LS) mode.

Note 3. This only applies to the products with 96- and 128-Kbyte flash memory.

Note 4. This only applies to the products with 192- to 768-Kbyte flash memory.

Note 5. The number of PWM outputs varies depending on the setting of channels in use (the number of masters and slaves). For details, see **7.9.3 Operation for the multiple PWM output function** in the RL78/G23 User's Manual.

Note 6. This applies when the corresponding bit in the peripheral I/O redirection register (PIOR) is set to 1.

Note 7. In normal operation, executing the instruction code FFH triggers an internal reset, but this is not the case during emulation by the on-chip debugging emulator.

Downloaded from Arrow.com.

2. Electrical Characteristics

This section describes the electrical characteristics of the following products.

- 2D : Consumer applications, T_A = -40 to +85°C
  R7F100Gxx2Dxx
- 3C : Industrial applications, T_A = -40 to +105°C
  R7F100Gxx3Cxx

Caution 1. RL78 microcontrollers have on-chip debugging functionality for use in the development and evaluation of user systems. Do not use on-chip debugging with products designated as part of mass production, because using this function may cause the guaranteed number of times the flash memory is rewritten to be exceeded, and product reliability therefore cannot be guaranteed. Renesas Electronics is not liable for problems occurring when on-chip debugging is used with products designated as part of mass production.

Caution 2. For the consumer application products, the ambient operating temperature of T_A = -40°C to +85°C applies.

Caution 3. For products that do not have an EV_{DD0}, EV_{DD1}, EV_{SS0}, or EV_{SS1} pin, read EV_{DD0} and EV_{DD1} as V_{DD}, and EV_{SS0} and EV_{SS1} as V_{SS}.

Caution 4. The present pins differ depending on the products. For details, see section 2.1 Functions of Port Pins through section 2.2.1 Functions for each product in the RL78/G23 User's Manual.

Downloaded from Arrow.com.

2.1 Absolute Maximum Ratings

(1/2)

Item	Symbols	Conditions	Ratings	Unit
Supply voltage	V_{DD}		-0.5 to +6.5	V
	EV_{DD0}, EV_{DD1}	EV_{DD0} = EV_{DD1}	-0.5 to +6.5	V
	EV_{SS0}, EV_{SS1}	EV_{SS0} = EV_{SS1}	-0.5 to +0.3	V
REGC pin input voltage	V_{IREGC}	REGC	-0.3 to +2.1 and -0.3 to V_{DD} + 0.3 **Note 1**	V
Input voltage	V_{I1}	P00 to P07, P10 to P17, P30 to P37, P40 to P47, P50 to P57, P64 to P67, P70 to P77, P80 to P87, P90 to P97, P100 to P106, P110 to P117, P120, P125 to P127, P140 to P147	-0.3 to EV_{DD0} + 0.3 and -0.3 to V_{DD} + 0.3 **Note 2**	V
	V_{I2}	P60 to P63 (N-ch open-drain)	-0.3 to +6.5	V
	V_{I3}	P20 to P27, P121 to P124, P137, P150 to P156, EXCLK, EXCLKS, $\overline{\text{RESET}}$	-0.3 to V_{DD} + 0.3 **Note 2**	V
Output voltage	V_{O1}	P00 to P07, P10 to P17, P30 to P37, P40 to P47, P50 to P57, P60 to P67, P70 to P77, P80 to P87, P90 to P97, P100 to P106, P110 to P117, P120, P125 to P127, P130, P140 to P147	-0.3 to EV_{DD0} + 0.3 and -0.3 to V_{DD} + 0.3 **Note 2**	V
	V_{O2}	P20 to P27, P121, P122, P150 to P156	-0.3 to V_{DD} + 0.3 **Note 2**	V
Analog input voltage	V_{AI1}	ANI16 to ANI26	-0.3 to EV_{DD0} + 0.3 and -0.3 to AV_{REFP} + 0.3 **Notes 2, 3**	V
	V_{AI2}	ANI0 to ANI14	-0.3 to V_{DD} + 0.3 and -0.3 to AV_{REFP} + 0.3 **Notes 2, 3**	V

Note 1. Connect the REGC pin to V_{SS} via a capacitor (0.47 to 1 μF). The listed value is the absolute maximum rating of the REGC pin. Only use the capacitor connection. Do not apply a specific voltage to this pin.

Note 2. This voltage must be no higher than 6.5 V.

Note 3. The voltage on a pin in use for A/D conversion must not exceed AV_{REFP} + 0.3.

Caution **Product quality may suffer if the absolute maximum rating is exceeded even momentarily for any parameter. That is, the absolute maximum ratings are rated values at which the product is on the verge of suffering physical damage, and therefore the product must be used under conditions that ensure that the absolute maximum ratings are not exceeded.**

Remark 1. The characteristics of functions multiplexed on a given pin are the same as those for the port pin unless otherwise specified.

Remark 2. AV_{REFP} refers to the positive reference voltage of the A/D converter.

Remark 3. The reference voltage is V_{SS}.

Downloaded from Arrow.com.

(2/2)

Item	Symbols	Conditions			Ratings	Unit
High-level output current	I_{OH1}	Per pin	P00 to P07, P10 to P17, P30 to P37, P40 to P47, P50 to P57, P64 to P67, P70 to P77, P80 to P87, P90 to P97, P100 to P106, P110 to P117, P120, P125 to P127, P130, P140 to P147		-40	mA
		Total of all pins -170 mA	P00 to P04, P07, P32 to P37, P40 to P47, P102 to P106, P120, P125 to P127, P130, P140 to P145		-70	mA
			P05, P06, P10 to P17, P30, P31, P50 to P57, P64 to P67, P70 to P77, P80 to P87, P90 to P97, P100, P101, P110 to P117, P146, P147		-100	mA
	I_{OH2}	Per pin	P20 to P27, P121, P122, P150 to P156		-5	mA
		Total of all pins			-20	mA
Low-level output current	I_{OL1}	Per pin	P00 to P07, P10 to P17, P30 to P37, P40 to P47, P50 to P57, P60 to P67, P70 to P77, P80 to P87, P90 to P97, P100 to P106, P110 to P117, P120, P125 to P127, P130, P140 to P147		40 **Note**	mA
		Total of all pins 170 mA	P00 to P04, P07, P32 to P37, P40 to P47, P102 to P106, P120, P125 to P127, P130, P140 to P145		70	mA
			P05, P06, P10 to P17, P30, P31, P50 to P57, P60 to P67, P70 to P77, P80 to P87, P90 to P97, P100, P101, P110 to P117, P146, P147		100	mA
	I_{OL2}	Per pin	P20 to P27, P121, P122, P150 to P156		10	mA
		Total of all pins			20	mA
Ambient operating temperature	T_A	In normal operation mode		3C: Industrial applications	-40 to +105	°C
				2D: Consumer applications	-40 to +85	
		In flash memory programming mode		3C: Industrial applications	-40 to +105	
				2D: Consumer applications	-40 to +85	
Storage temperature	T_{stg}				-65 to +150	°C

Note The rating for the following port pins is 80 mA when I_{OL1} = 40.0 mA is specified by the 40-mA port output control register (PTDC).

- Pins P04, P10, and P120 of the 64- to 100-pin package products with 384- to 768-Kbyte code flash memory
- Pin P110 of the 100-pin package products with 384- to 768-Kbyte code flash memory
- Pins P17 and P51 of the 30- to 52-pin package products
- Pin P70 of the 32- to 52-pin package products

Caution **Product quality may suffer if the absolute maximum rating is exceeded even momentarily for any parameter. That is, the absolute maximum ratings are rated values at which the product is on the verge of suffering physical damage, and therefore the product must be used under conditions that ensure that the absolute maximum ratings are not exceeded.**

Remark The characteristics of functions multiplexed on a given pin are the same as those for the port pin unless otherwise specified.

Downloaded from Arrow.com.

2.2 Characteristics of the Oscillators

2.2.1 Characteristics of the X1 oscillator

(T_A = -40 to +105°C, 1.6 V ≤ V_{DD} ≤ 5.5 V, V_{SS} = 0 V)

Item	Resonator	Conditions	Min.	Typ.	Max.	Unit
X1 clock oscillation allowable input cycle time**Note**	Ceramic resonator/ crystal resonator		0.05		1	μs

Note The listed time and frequency indicate permissible ranges of the oscillator. For actual applications, request evaluation by the manufacturer of the oscillator circuit mounted on a board so you can use appropriate values. Refer to **2.4 AC Characteristics** for instruction execution time.

Caution **Since the CPU is started by the high-speed on-chip oscillator clock after release from the reset state, the user should use the oscillation stabilization time counter status register (OSTC) to check the X1 clock oscillation stabilization time. Specify the values for the oscillation stabilization time in the OSTC register and the oscillation stabilization time select register (OSTS) after having sufficiently evaluated the oscillation stabilization time with the resonator to be used.**

2.2.2 Characteristics of the XT1 oscillator

(T_A = -40 to +105°C, 2.4 V ≤ V_{DD} ≤ 5.5 V for the 30- to 36-pin products, 1.6 V ≤ V_{DD} ≤ 5.5 V for the 40- to 128-pin products, V_{SS} = 0 V)

Item	Resonator	Conditions	Min.	Typ.	Max.	Unit
XT1 clock oscillation frequency (f_{XT})**Note**	Crystal resonator			32.768		kHz

Note The listed time and frequency indicate permissible ranges of the oscillator. For actual applications, request evaluation by the manufacturer of the oscillator circuit mounted on a board so you can use appropriate values. Refer to **2.4 AC Characteristics** for instruction execution time.

Downloaded from Arrow.com.

2.2.3 Characteristics of the on-chip oscillators

(T_A = -40 to +105°C, 1.6 V ≤ V_{DD} ≤ 5.5 V, V_{SS} = 0 V)

Item	Symbol	Conditions			Min.	Typ.	Max.	Unit
High-speed on-chip oscillator clock frequency	f_{IH}				1		32	MHz
High-speed on-chip oscillator clock frequency accuracy Note 1		HIPREC = 1	+85 to +105°C	1.8 V ≤ V_{DD} ≤ 5.5 V	-2.0		+2.0	%
				1.6 V ≤ V_{DD} ≤ 5.5 V	-6.0		+6.0	%
			-20 to +85°C	1.8 V ≤ V_{DD} ≤ 5.5 V	-1.0		+1.0	%
				1.6 V ≤ V_{DD} ≤ 5.5 V	-5.0		+5.0	%
			-40 to -20°C	1.8 V ≤ V_{DD} ≤ 5.5 V	-1.5		+1.5	%
				1.6 V ≤ V_{DD} ≤ 5.5 V	-5.5		+5.5	%
		HIPREC = 0 Note 2			-15		0	%
High-speed on-chip oscillator clock correction resolution						0.05		%
Middle-speed on-chip oscillator clock frequency Note 3	f_{IM}				1		4	MHz
Middle-speed on-chip oscillator clock frequency accuracy Note 1					-12		+12	%
Middle-speed on-chip oscillator clock correction resolution						0.15		%
Middle-speed on-chip oscillator frequency temperature coefficient							±0.17 Note 4	%/°C
Low-speed on-chip oscillator clock frequency Note 3	f_{IL}					32.768		kHz
Low-speed on-chip oscillator clock frequency accuracy Note 1					-15		+15	%
Low-speed on-chip oscillator clock correction resolution						0.3		%
Low-speed on-chip oscillator frequency temperature coefficient							±0.21 Note 4	%/°C

Note 1. The accuracy values were obtained in testing of this product.

Note 2. The listed condition applies when the setting of the FRQSEL3 bit of the user option byte is 1.

Note 3. The listed values only indicate the characteristics of the oscillators. Refer to **2.4 AC Characteristics** for instruction execution time.

Note 4. These values are the results of characteristic evaluation and are not checked for shipment.

Downloaded from Arrow.com.

2.3 DC Characteristics

2.3.1 Pin characteristics

(T_A = -40 to +105°C, 1.6 V ≤ EV_{DD0} = EV_{DD1} ≤ V_{DD} ≤ 5.5 V, V_{SS} = EV_{SS0} = EV_{SS1} = 0 V) (1/7)

Item	Symbol	Conditions		Min.	Typ.	Max.	Unit
Allowable high-level output current Note 1	I_{OH1}	Per pin for P00 to P07, P10 to P17, P30 to P37, P40 to P47, P50 to P57, P64 to P67, P70 to P77, P80 to P87, P90 to P97, P100 to P106, P110 to P117, P120, P125 to P127, P130, P140 to P147	1.6 V ≤ EV_{DD0} ≤ 5.5 V			-10.0 Note 2	mA
		Total of P00 to P04, P07, P32 to P37, P40 to P47, P102 to P106, P120, P125 to P127, P130, P140 to P145 (when duty ≤ 70% Note 3)	4.0 V ≤ EV_{DD0} ≤ 5.5 V			-55.0 Note 4	mA
			2.7 V ≤ EV_{DD0} < 4.0 V			-10.0	mA
			1.8 V ≤ EV_{DD0} < 2.7 V			-5.0	mA
			1.6 V ≤ EV_{DD0} < 1.8 V			-2.5	mA
		Total of P05, P06, P10 to P17, P30, P31, P50 to P57, P64 to P67, P70 to P77, P80 to P87, P90 to P97, P100, P101, P110 to P117, P146, P147 (when duty ≤ 70% Note 3)	4.0 V ≤ EV_{DD0} ≤ 5.5 V			-80.0 Note 5	mA
			2.7 V ≤ EV_{DD0} < 4.0 V			-19.0	mA
			1.8 V ≤ EV_{DD0} < 2.7 V			-10.0	mA
			1.6 V ≤ EV_{DD0} < 1.8 V			-5.0	mA
		Total of all pins (when duty ≤ 70% Note 3)	1.6 V ≤ EV_{DD0} ≤ 5.5 V			-135.0 Note 6	mA
	I_{OH2}	Per pin for P20 to P27, P121, P122, P150 to P156	4.0 V ≤ V_{DD} ≤ 5.5 V			-3.0 Note 2	mA
			2.7 V ≤ V_{DD} < 4.0 V			-1.0 Note 2	mA
			1.8 V ≤ V_{DD} < 2.7 V			-1.0 Note 2	mA
			1.6 V ≤ V_{DD} < 1.8 V			-0.5 Note 2	mA
		Total of all pins (when duty ≤ 70% Note 3)	4.0 V ≤ V_{DD} ≤ 5.5 V			-20.0	mA
			2.7 V ≤ V_{DD} < 4.0 V			-10.0	mA
			1.8 V ≤ V_{DD} < 2.7 V			-5.0	mA
			1.6 V ≤ V_{DD} < 1.8 V			-5.0	mA

Note 1. Device operation is guaranteed at the listed currents even if current is flowing from the EV_{DD0}, EV_{DD1}, or V_{DD} pin to an output pin.

Note 2. The combination of these and other pins must also not exceed the value for maximum total current.

Note 3. The listed currents apply when the duty cycle is no greater than 70%. Use the following formula to calculate the output current when the duty cycle is greater than 70%, where n is the duty cycle.

- Total output current from the listed pins = (I_{OH} × 0.7)/(n × 0.01)
  Example when n = 80% and I_{OH} = -10.0 mA
  Total output current from the listed pins = (-10.0 × 0.7)/(80 × 0.01) ≈ -8.7 mA
  Note that the duty cycle has no effect on the current that is allowed to flow into a single pin. A current higher than the absolute maximum rating must not flow into a single pin.

(Notes, Caution, and Remark continue on the next page.)

Downloaded from Arrow.com.

Note 4. The maximum value is -30 mA in the products for industrial applications (R7F100Gxx3Cxx) with an ambient operating temperature range of +85°C to +105°C.

Note 5. The maximum value is -50 mA in the products for industrial applications (R7F100Gxx3Cxx) with an ambient operating temperature range of +85°C to +105°C.

Note 6. The maximum values are respectively -100 mA and -60 mA in the products for industrial applications (R7F100Gxx3Cxx) with an ambient operating temperature range of -40°C to +85°C and of +85°C to +105°C.

Caution **The following pins are not capable of the output of high-level signals in the N-ch open-drain output mode. P00, P02 to P04, P10 to P15, P17, P34, P42 to P45, P50, P52 to P55, P71, P72, P74, P80 to P83, P96, P120, and P142 to P144**

Remark The characteristics of functions multiplexed on a given pin are the same as those for the port pin unless otherwise specified.

Downloaded from Arrow.com.

(T_A = -40 to +105°C, 1.6 V ≤ EV_{DD0} = EV_{DD1} ≤ V_{DD} ≤ 5.5 V, V_{SS} = EV_{SS0} = EV_{SS1} = 0 V) (2/7)

Item	Symbol	Conditions		Min.	Typ.	Max.	Unit
Allowable low-level output current[Note 1]	I_{OL1}	Per pin for P00 to P07, P10 to P17, P30 to P37, P40 to P47, P50 to P57, P64 to P67, P70 to P77, P80 to P87, P90 to P97, P100 to P106, P110 to P117, P120, P125 to P127, P130, P140 to P147				20.0 Notes 2, 3	mA
		Per pin for P60 to P63				15.0 Note 2	mA
		Total of P00 to P04, P07, P32 to P37, P40 to P47, P102 to P106, P120, P125 to P127, P130, P140 to P145 (when duty ≤ 70%[Note 4])	4.0 V ≤ EV_{DD0} ≤ 5.5 V			70.0 Note 5	mA
			2.7 V ≤ EV_{DD0} < 4.0 V			15.0	mA
			1.8 V ≤ EV_{DD0} < 2.7 V			9.0	mA
			1.6 V ≤ EV_{DD0} < 1.8 V			4.5	mA
		Total of P05, P06, P10 to P17, P30, P31, P50 to P57, P60 to P67, P70 to P77, P80 to P87, P90 to P97, P100, P101, P110 to P117, P146, P147 (when duty ≤ 70%[Note 4])	4.0 V ≤ EV_{DD0} ≤ 5.5 V			80.0 Note 5	mA
			2.7 V ≤ EV_{DD0} < 4.0 V			35.0	mA
			1.8 V ≤ EV_{DD0} < 2.7 V			20.0	mA
			1.6 V ≤ EV_{DD0} < 1.8 V			10.0	mA
		Total of all pins (when duty ≤ 70%[Note 4])				150.0 Note 6	mA
	I_{OL2}	Per pin for P20 to P27, P121, P122, P150 to P156	4.0 V ≤ V_{DD} ≤ 5.5 V			8.5[Note 2]	mA
			2.7 V ≤ V_{DD} < 4.0 V			1.5[Note 2]	mA
			1.8 V ≤ V_{DD} < 2.7 V			0.6[Note 2]	mA
			1.6 V ≤ V_{DD} < 1.8 V			0.4[Note 2]	mA
		Total of all pins (when duty ≤ 70%[Note 4])	4.0 V ≤ V_{DD} ≤ 5.5 V			20	mA
			2.7 V ≤ V_{DD} < 4.0 V			20	mA
			1.8 V ≤ V_{DD} < 2.7 V			15	mA
			1.6 V ≤ V_{DD} < 1.8 V			10	mA

Note 1. Device operation is guaranteed at the listed currents even if current is flowing from an output pin to the EV_{SS0}, EV_{SS1}, or V_{SS} pin.

Note 2. The combination of these and other pins must also not exceed the value for maximum total current.

Note 3. The maximum rating for the following port pins is 40 mA when I_{OL1} = 40.0 mA is specified by the 40-mA port output control register (PTDC).

- Pins P04, P10, and P120 of the 64- to 100-pin package products with 384- to 768-Kbyte code flash memory
- Pin P101 of the 100-pin package products with 384- to 768-Kbyte code flash memory
- Pins P17 and P51 of the 30- to 52-pin package products
- Pin P70 of the 32- to 52-pin package products

Note 4. The listed currents apply when the duty cycle is no greater than 70%. Use the following formula to calculate the output current when the duty cycle is greater than 70%, where n is the duty cycle.

- Total output current from the listed pins = (I_{OL} × 0.7)/(n × 0.01)
  Example when n = 80% and I_{OL} = 10.0 mA
  Total output current from the listed pins = (10.0 × 0.7)/(80 × 0.01) ≈ 8.7 mA
  Note that the duty cycle has no effect on the current that is allowed to flow into a single pin. A current higher than the absolute maximum rating must not flow into a single pin.

(Notes and Remark continue on the next page.)

Downloaded from Arrow.com.

Note 5. The maximum value is 40 mA in the products for industrial applications (R7F100Gxx3Cxx) with an ambient operating temperature range of +85°C to +105°C.

Note 6. The maximum value is 80 mA in the products for industrial applications (R7F100Gxx3Cxx) with an ambient operating temperature range of +85°C to +105°C.

Remark The characteristics of functions multiplexed on a given pin are the same as those for the port pin unless otherwise specified.

Downloaded from Arrow.com.

(TA = -40 to +105°C, 1.6 V ≤ EVDD0 = EVDD1 ≤ VDD ≤ 5.5 V, VSS = EVSS0 = EVSS1 = 0 V) (3/7)

Item	Symbol	Conditions		Min.	Typ.	Max.	Unit
Input voltage, high	VIH1	P00 to P07, P10 to P17, P30 to P37, P40 to P47, P50 to P57, P64 to P67, P70 to P77, P80 to P87, P90 to P97, P100 to P106, P110 to P117, P120, P125 to P127, P140 to P147	Normal input buffer	0.8 EVDD0		EVDD0	V
<R>	VIH2	P01, P03, P04, P10, P11, P13 to P17, P41, P43, P44, P53 to P55, P71, P80, P81, P142, P143	TTL input buffer 4.0 V ≤ EVDD0 ≤ 5.5 V	2.2		EVDD0	V
			TTL input buffer 3.3 V ≤ EVDD0 < 4.0 V	2.0		EVDD0	V
			TTL input buffer 1.6 V ≤ EVDD0 < 3.3 V	1.5		EVDD0	V
	VIH3	P20 to P27, P150 to P156		0.7 VDD		VDD	V
	VIH4	P60 to P63		0.7 EVDD0		6.0	V
	VIH5	P121 to P124, P137, EXCLK, EXCLKS, $\overline{\text{RESET}}$		0.8 VDD		VDD	V
Input voltage, low	VIL1	P00 to P07, P10 to P17, P30 to P37, P40 to P47, P50 to P57, P64 to P67, P70 to P77, P80 to P87, P90 to P97, P100 to P106, P110 to P117, P120, P125 to P127, P140 to P147	Normal input buffer	0		0.2 EVDD0	V
<R>	VIL2	P01, P03, P04, P10, P11, P13 to P17, P41, P43, P44, P53 to P55, P71, P80, P81, P142, P143	TTL input buffer 4.0 V ≤ EVDD0 ≤ 5.5 V	0		0.8	V
			TTL input buffer 3.3 V ≤ EVDD0 < 4.0 V	0		0.5	V
			TTL input buffer 1.6 V ≤ EVDD0 < 3.3 V	0		0.32	V
	VIL3	P20 to P27, P150 to P156		0		0.3 VDD	V
	VIL4	P60 to P63		0		0.3 EVDD0	V
	VIL5	P121 to P124, P137, EXCLK, EXCLKS, $\overline{\text{RESET}}$		0		0.2 VDD	V

Caution **The maximum value of VIH of pins P00, P02 to P04, P10 to P15, P17, P34, P42 to P45, P50, P52 to P55, P71, P72, P74, P80 to P83, P96, P120, and P142 to P144 is EVDD0, even in the N-ch open-drain output mode.**

Remark The characteristics of functions multiplexed on a given pin are the same as those for the port pin unless otherwise specified.

Downloaded from Arrow.com.

(T_A = -40 to +105°C, 1.6 V ≤ EV_{DD0} = EV_{DD1} ≤ V_{DD} ≤ 5.5 V, V_{SS} = EV_{SS0} = EV_{SS1} = 0 V) (4/7)

Item	Symbol	Conditions		Min.	Typ.	Max.	Unit
Output voltage, high	V_{OH1}	P00 to P07, P10 to P17, P30 to P37, P40 to P47, P50 to P57, P64 to P67, P70 to P77, P80 to P87, P90 to P97, P100 to P106, P110 to P117, P120, P125 to P127, P130, P140 to P147	4.0 V ≤ EV_{DD0} ≤ 5.5 V, I_{OH1} = -10.0 mA	EV_{DD0} - 1.5			V
			4.0 V ≤ EV_{DD0} ≤ 5.5 V, I_{OH1} = -3.0 mA	EV_{DD0} - 0.7			V
			2.7 V ≤ EV_{DD0} ≤ 5.5 V, I_{OH1} = -2.0 mA	EV_{DD0} - 0.6			V
			1.8 V ≤ EV_{DD0} ≤ 5.5 V, I_{OH1} = -1.5 mA	EV_{DD0} - 0.5			V
			1.6 V ≤ EV_{DD0} < 5.5 V, I_{OH1} = -1.0 mA	EV_{DD0} - 0.5			V
	V_{OH2}	P20 to P27, P121, P122, P150 to P156	4.0 V ≤ V_{DD} ≤ 5.5 V, I_{OH2} = -3.0 mA	V_{DD} - 0.7			V
			2.7 V ≤ V_{DD} < 4.0 V, I_{OH2} = -1.0 mA	V_{DD} - 0.5			V
			1.8 V ≤ V_{DD} < 2.7 V, I_{OH2} = -1.0 mA	V_{DD} - 0.5			V
			1.6 V ≤ V_{DD} < 1.8 V, I_{OH2} = -0.5 mA	V_{DD} - 0.5			V

Caution **P00, P02 to P04, P10 to P15, P17, P34, P42 to P45, P50, P52 to P55, P71, P72, P74, P80 to P83, P96, P120, and P142 to P144 do not output high-level signals in the N-ch open-drain output mode.**

Remark The characteristics of functions multiplexed on a given pin are the same as those for the port pin unless otherwise specified.

Downloaded from Arrow.com.

(T_A = -40 to +105°C, 1.6 V ≤ EV_{DD0} = EV_{DD1} ≤ V_{DD} ≤ 5.5 V, V_{SS} = EV_{SS0} = EV_{SS1} = 0 V) (5/7)

Item	Symbol	Conditions			Min.	Typ.	Max.	Unit
Output voltage, low	V_{OL1}	P00 to P07, P10 to P17, P30 to P37, P40 to P47, P50 to P57, P64 to P67, P70 to P77, P80 to P87, P90 to P97, P100 to P106, P110 to P117, P120, P125 to P127, P130, P140 to P147	4.0 V ≤ EV_{DD0} ≤ 5.5 V	I_{OL1} = 20.0 mA			1.3	V
				I_{OL1} = 40.0 mA Note			1.3	V
			4.0 V ≤ EV_{DD0} ≤ 5.5 V	I_{OL1} = 8.5 mA			0.7	V
				I_{OL1} = 17.0 mA Note			0.7	V
			2.7 V ≤ EV_{DD0} ≤ 5.5 V	I_{OL1} = 3.0 mA			0.6	V
				I_{OL1} = 6.0 mA Note			0.6	V
			2.7 V ≤ EV_{DD0} ≤ 5.5 V	I_{OL1} = 1.5 mA			0.4	V
				I_{OL1} = 3.0 mA Note			0.4	V
			1.8 V ≤ EV_{DD0} ≤ 5.5 V	I_{OL1} = 0.6 mA			0.4	V
				I_{OL1} = 1.2 mA Note			0.4	V
			1.6 V ≤ EV_{DD0} ≤ 5.5 V	I_{OL1} = 0.3 mA			0.4	V
				I_{OL1} = 0.6 mA Note			0.4	V
	V_{OL2}	P20 to P27, P121, P122, P150 to P156	4.0 V ≤ V_{DD} ≤ 5.5 V, I_{OL2} = 8.5 mA				0.7	V
			2.7 V ≤ V_{DD} < 4.0 V, I_{OL2} = 1.5 mA				0.5	V
			1.8 V ≤ V_{DD} < 2.7 V, I_{OL2} = 0.6 mA				0.4	V
			1.6 V ≤ V_{DD} < 1.8 V, I_{OL2} = 0.4 mA				0.4	V
	V_{OL3}	P60 to P63	4.0 V ≤ EV_{DD0} ≤ 5.5 V, I_{OL3} = 15.0 mA				2.0	V
			4.0 V ≤ EV_{DD0} ≤ 5.5 V, I_{OL3} = 5.0 mA				0.4	V
			2.7 V ≤ EV_{DD0} ≤ 5.5 V, I_{OL3} = 3.0 mA				0.4	V
			1.8 V ≤ EV_{DD0} ≤ 5.5 V, I_{OL3} = 2.0 mA				0.4	V
			1.6 V ≤ EV_{DD0} ≤ 5.5 V, I_{OL3} = 1.0 mA				0.4	V

Note The listed value applies when I_{OL1} = 40.0 mA is specified for the following port pins by the 40-mA port output control register (PTDC).

- Pins P04, P10, and P120 of the 64- to 100-pin package products with 384- to 768-Kbyte code flash memory
- Pin P101 of the 100-pin package products with 384- to 768-Kbyte code flash memory
- Pins P17 and P51 of the 30- to 52-pin package products
- Pin P70 of the 32- to 52-pin products

Remark The characteristics of functions multiplexed on a given pin are the same as those for the port pin unless otherwise specified.

Downloaded from Arrow.com.

(T_A = -40 to +105°C, 1.6 V ≤ EV_{DD0} = EV_{DD1} ≤ V_{DD} ≤ 5.5 V, V_{SS} = EV_{SS0} = EV_{SS1} = 0 V) (6/7)

Item	Symbol	Conditions			Min.	Typ.	Max.	Unit
Output current[Note]	$CCDI_{OL}$	P16, P17, P50, P51, P60 to P63	CCSm = 01H	4.0 V ≤ EV_{DD0} ≤ 5.5 V	1.0	1.8	2.6	mA
				2.7 V ≤ EV_{DD0} < 4.0 V	0.8	1.5	2.3	mA
			CCSm = 02H	4.0 V ≤ EV_{DD0} ≤ 5.5 V	3.0	4.9	6.5	mA
				3.0 V ≤ EV_{DD0} < 4.0 V	2.7	4.3	5.9	mA
			CCSm = 03H	4.0 V ≤ EV_{DD0} ≤ 5.5 V	6.6	10.0	13.2	mA
				3.3 V ≤ EV_{DD0} < 4.0 V	6.0	9.1	12.1	mA
		P60 to P63	CCSm = 04H	4.0 V ≤ EV_{DD0} ≤ 5.5 V	10.2	15.0	19.8	mA
				3.3 V ≤ EV_{DD0} < 4.0 V	9.4	13.8	18.2	mA

Note The listed currents apply when the output current control function is enabled.

Downloaded from Arrow.com.

(T_A = -40 to +105°C, 1.6 V ≤ EV_{DD0} = EV_{DD1} ≤ V_{DD} ≤ 5.5 V, V_{SS} = EV_{SS0} = EV_{SS1} = 0 V) (7/7)

Item	Symbol	Conditions		Min.	Typ.	Max.	Unit
Input leakage current, high	I_{LIH1}	P00 to P07, P10 to P17, P30 to P37, P40 to P47, P50 to P57, P60 to P67, P70 to P77, P80 to P87, P90 to P97, P100 to P106, P110 to P117, P120, P125 to P127, P140 to P147	V_I = EV_{DD0}			0.5	μA
	I_{LIH2}	P20 to P27, P137, P150 to P156, $\overline{RESET}$	V_I = V_{DD}			0.5	μA
	I_{LIH3}	P121 to P124 (X1, X2, XT1, XT2, EXCLK, EXCLKS)	V_I = V_{DD}			0.5	μA
Input leakage current, low	I_{LIL1}	P00 to P07, P10 to P17, P30 to P37, P40 to P47, P50 to P57, P60 to P67, P70 to P77, P80 to P87, P90 to P97, P100 to P106, P110 to P117, P120, P125 to P127, P140 to P147	V_I = EV_{SS0}			-0.5	μA
	I_{LIL2}	P20 to P27, P137, P150 to P156, $\overline{RESET}$	V_I = V_{SS}			-0.5	μA
	I_{LIL3}	P121 to P124 (X1, X2, XT1, XT2, EXCLK, EXCLKS)	V_I = V_{SS}			-0.5	μA
On-chip pll-up resistance	R_U	P00 to P07, P10 to P17, P30 to P37, P40 to P47, P50 to P57, P64 to P67, P70 to P77, P80 to P87, P90 to P97, P100 to P106, P110 to P117, P120 to P122, P125 to P127, P140 to P147	V_I = EV_{SS0}, In input port	10	20	100	kΩ

Remark The characteristics of functions multiplexed on a given pin are the same as those for the port pin unless otherwise specified.

Downloaded from Arrow.com.

2.3.2 Supply current characteristics

1. 30- to 64-pin package products with 96- to 128-Kbyte code flash memory

(T_A = -40 to +105°C, 1.6 V ≤ EV_{DD0} ≤ V_{DD} ≤ 5.5 V, V_{SS} = EV_{SS0} = 0 V) (1/4)

Item	Symbol	Conditions					Min.	Typ.	Max.	Unit
Supply current **Note 1**	I_{DD1}	Operating mode	HS (high-speed main) mode	f_{IH} = 32 MHz**Note 2**	Basic operation	V_{DD} = 5.0 V		1.3	—	mA
						V_{DD} = 1.8 V		1.3	—	
					Normal operation	V_{DD} = 5.0 V		3.0	5.0	mA
						V_{DD} = 1.8 V		3.0	5.0	
			LS (low-speed main) mode	f_{IH} = 24 MHz**Note 2**	Normal operation	V_{DD} = 5.0 V		2.3	3.8	mA
						V_{DD} = 1.8 V		2.3	3.8	
				f_{IH} = 16 MHz**Note 2**	Normal operation	V_{DD} = 5.0 V		1.7	2.7	mA
						V_{DD} = 1.8 V		1.7	2.7	
				f_{IM} = 4 MHz**Note 3**	Normal operation	V_{DD} = 5.0 V		0.4	0.7	mA
						V_{DD} = 1.6 V		0.4	0.7	
			LP (low-power main) mode	f_{IM} = 2 MHz**Note 3**	Normal operation	V_{DD} = 5.0 V		200	325	μA
						V_{DD} = 1.6 V		200	325	
				f_{IM} = 1 MHz**Note 3**	Normal operation	V_{DD} = 5.0 V		112	178	μA
						V_{DD} = 1.6 V		111	176	
			HS (high-speed main) mode	f_{MX} = 20 MHz**Note 4**, Square wave input	Normal operation	V_{DD} = 5.0 V		1.9	3.2	mA
						V_{DD} = 1.8 V		1.9	3.2	
			LS (low-speed main) mode	f_{MX} = 20 MHz**Note 4**, Square wave input	Normal operation	V_{DD} = 5.0 V		1.8	3.0	mA
						V_{DD} = 1.8 V		1.7	3.0	
				f_{MX} = 20 MHz**Note 4**, Resonator connection	Normal operation	V_{DD} = 5.0 V		1.9	3.2	mA
						V_{DD} = 1.8 V		1.9	3.2	
				f_{MX} = 10 MHz**Note 4**, Square wave input	Normal operation	V_{DD} = 5.0 V		0.9	1.6	mA
						V_{DD} = 1.8 V		0.9	1.6	
				f_{MX} = 10 MHz**Note 4**, Resonator connection	Normal operation	V_{DD} = 5.0 V		1.0	1.7	mA
						V_{DD} = 1.8 V		1.0	1.7	
				f_{MX} = 8 MHz**Note 4**, Square wave input	Normal operation	V_{DD} = 5.0 V		0.8	1.3	mA
						V_{DD} = 1.8 V		0.7	1.3	
				f_{MX} = 8 MHz**Note 4**, Resonator connection	Normal operation	V_{DD} = 5.0 V		0.9	1.4	mA
						V_{DD} = 1.8 V		0.8	1.4	

Note 1. The listed currents are the total currents flowing into V_{DD} and EV_{DD0}, including the input leakage currents flowing when the level of the input pin is fixed to V_{DD}, EV_{DD0} or V_{SS}, EV_{SS0}. The following points apply in the HS (high-speed main), LS (low-speed main), and LP (low-power main) modes.

- The currents in the "Typ." column do not include the operating currents of the peripheral modules.
- The currents in the "Max." column include the operating currents of the PCLBUZ, TAU, SAU, and IICA modules.

<R>

Note 2. The listed currents apply when the high-speed system clock, middle-speed on-chip oscillator, low-speed on-chip oscillator, and subsystem clock are stopped.

Note 3. The listed currents apply when the high-speed on-chip oscillator, high-speed system clock, low-speed on-chip oscillator, and subsystem clock are stopped.

Note 4. The listed currents apply when the high-speed on-chip oscillator, middle-speed on-chip oscillator, low-speed on-chip oscillator, and subsystem clock are stopped.

(Remarks are listed on the next page.)

Downloaded from Arrow.com.

Remark 1. f_{IH}: High-speed on-chip oscillator clock frequency
Remark 2. f_{IM}: Middle-speed on-chip oscillator clock frequency
Remark 3. f_{MX}: High-speed system clock frequency (X1 clock oscillation frequency or external main system clock frequency)
Remark 4. The typical value for the ambient operating temperature (T_A) is +25°C unless otherwise specified.

Downloaded from Arrow.com.

1. 30- to 64-pin package products with 96- to 128-Kbyte code flash memory

(T_A = -40 to +105°C, 1.6 V ≤ EV_{DD0} ≤ V_{DD} ≤ 5.5 V, V_{SS} = EV_{SS0} = 0 V) (2/4)

Item	Symbol	Conditions					Min.	Typ.	Max.	Unit
Supply current Note 1	I_{DD1}	Operating mode	Subsystem clock operation mode	f_{SUB} = 32.768 kHz Note 2, Low-speed on-chip oscillator operation	Normal operation	T_A = -40°C		3.2	5.5	μA
						T_A = +25°C		3.5	5.8	
						T_A = +50°C		3.8	8.5	
						T_A = +70°C		4.4	13.8	
						T_A = +85°C		5.3	22.1	
						T_A = +105°C		7.7	40.9	
				f_{SUB} = 32.768 kHz Note 3, Square wave input	Normal operation	T_A = -40°C		3.2	5.6	μA
						T_A = +25°C		3.4	5.7	
						T_A = +50°C		3.7	8.5	
						T_A = +70°C		4.3	13.7	
						T_A = +85°C		5.2	21.4	
						T_A = +105°C		7.6	39.0	
				f_{SUB} = 32.768 kHz Note 3, Resonator connection	Normal operation	T_A = -40°C		3.2	5.2	μA
						T_A = +25°C		3.4	5.4	
						T_A = +50°C		3.7	7.7	
						T_A = +70°C		4.3	13.4	
						T_A = +85°C		5.2	20.9	
						T_A = +105°C		7.7	38.5	

Note 1. The listed currents are the total currents flowing into V_{DD} and EV_{DD0}, including the input leakage currents flowing when the level of the input pin is fixed to V_{DD}, EV_{DD0} or V_{SS}, EV_{SS0}. In the subsystem clock operation mode, the currents in both the "Typ." and "Max." columns do not include the operating currents of the peripheral modules.

Note 2. The listed currents apply when the high-speed on-chip oscillator, middle-speed on-chip oscillator, high-speed system clock, and subsystem clock are stopped.

Note 3. The listed currents apply when the high-speed on-chip oscillator, high-speed system clock, middle-speed on-chip oscillator, and low-speed on-chip oscillator are stopped, and the low power consumption oscillation 3 is specified (AMPHS1, AMPHS0 = 11B).

Remark 1. f_{IL}: Low-speed on-chip oscillator clock frequency

Remark 2. f_{SUB}: Subsystem clock frequency (XT1 clock oscillation frequency)

Downloaded from Arrow.com.

1. 30- to 64-pin package products with 96- to 128-Kbyte code flash memory

(T_A = -40 to +105°C, 1.6 V ≤ EV_{DD0} ≤ V_{DD} ≤ 5.5 V, V_{SS} = EV_{SS0} = 0 V) (3/4)

Item	Symbol	Conditions				Min.	Typ.	Max.	Unit
Supply current Note 1	I_{DD2} Note 2	HALT mode	HS (high-speed main) mode	f_{IH} = 32 MHz Note 3	V_{DD} = 5.0 V		0.54	1.93	mA
					V_{DD} = 1.8 V		0.53	1.92	
			LS (low-speed main) mode	f_{IH} = 24 MHz Note 3	V_{DD} = 5.0 V		0.45	1.50	mA
					V_{DD} = 1.8 V		0.44	1.49	
				f_{IH} = 16 MHz Note 3	V_{DD} = 5.0 V		0.45	1.19	mA
					V_{DD} = 1.8 V		0.44	1.18	
				f_{IM} = 4 MHz Note 4	V_{DD} = 5.0 V		0.08	0.26	mA
					V_{DD} = 1.6 V		0.08	0.26	
			LP (low-power main) mode	f_{IM} = 2 MHz Note 4	V_{DD} = 5.0 V		33	120	μA
					V_{DD} = 1.6 V		33	120	
				f_{IM} = 1 MHz Note 4	V_{DD} = 5.0 V		29	76	μA
					V_{DD} = 1.6 V		28	74	
			HS (high-speed main) mode	f_{MX} = 20 MHz Note 5, Square wave input	V_{DD} = 5.0 V		0.22	1.07	mA
					V_{DD} = 1.8 V		0.19	1.03	
			LS (low-speed main) mode	f_{MX} = 20 MHz Note 5, Square wave input	V_{DD} = 5.0 V		0.22	1.07	mA
					V_{DD} = 1.8 V		0.19	1.03	
				f_{MX} = 20 MHz Note 5, Resonator connection	V_{DD} = 5.0 V		0.40	1.28	mA
					V_{DD} = 1.8 V		0.39	1.27	
				f_{MX} = 10 MHz Note 5, Square wave input	V_{DD} = 5.0 V		0.14	0.57	mA
					V_{DD} = 1.8 V		0.12	0.54	
				f_{MX} = 10 MHz Note 5, Resonator connection	V_{DD} = 5.0 V		0.24	0.69	mA
					V_{DD} = 1.8 V		0.23	0.68	
				f_{MX} = 8 MHz Note 5, Square wave input	V_{DD} = 5.0 V		0.12	0.47	mA
					V_{DD} = 1.8 V		0.10	0.44	
				f_{MX} = 8 MHz Note 5, Resonator connection	V_{DD} = 5.0 V		0.21	0.58	mA
					V_{DD} = 1.8 V		0.20	0.57	

Note 1. The listed currents are the total currents flowing into V_{DD} and EV_{DD0}, including the input leakage currents flowing when the level of the input pin is fixed to V_{DD}, EV_{DD0} or V_{SS}, EV_{SS0}. The following points apply in the HS (high-speed main), LS (low-speed main), and LP (low-power main) modes.

- The currents in the "Typ." column do not include the operating currents of the peripheral modules.
- The currents in the "Max." column include the operating currents of the PCLBUZ, TAU, SAU, and IICA modules.

<R>

Note 2. The listed currents apply when the HALT instruction has been fetched from the flash memory for execution.

Note 3. The listed currents apply when the high-speed system clock, middle-speed on-chip oscillator, low-speed on-chip oscillator, and subsystem clock are stopped.

Note 4. The listed currents apply when the high-speed on-chip oscillator, high-speed system clock, low-speed on-chip oscillator, and subsystem clock are stopped.

Note 5. The listed currents apply when the high-speed on-chip oscillator, middle-speed on-chip oscillator, low-speed on-chip oscillator, and subsystem clock are stopped.

(Remarks are listed on the next page.)

Downloaded from Arrow.com.

Remark 1. f_{IH}: High-speed on-chip oscillator clock frequency
Remark 2. f_{IM}: Middle-speed on-chip oscillator clock frequency
Remark 3. f_{MX}: High-speed system clock frequency (X1 clock oscillation frequency or external main system clock frequency)
Remark 4. The typical value for the ambient operating temperature (T_A) is +25°C unless otherwise specified.

Downloaded from Arrow.com.

1. 30- to 64-pin package products with 96- to 128-Kbyte code flash memory

(T_A = -40 to +105°C, 1.6 V ≤ EV_{DD0} ≤ V_{DD} ≤ 5.5 V, V_{SS} = EV_{SS0} = 0 V) (4/4)

Item	Symbol	Conditions				Min.	Typ.	Max.	Unit
Supply current Note 1	I_{DD2} Note 2	HALT mode	Subsystem clock operation mode	f_{SUB} = 32.768 kHz Note 3, Low-speed on-chip oscillator operation	T_A = -40°C		0.53	2.31	μA
					T_A = +25°C		0.65	2.38	
					T_A = +50°C		0.80	4.95	
					T_A = +70°C		1.17	9.97	
					T_A = +85°C		1.78	17.96	
					T_A = +105°C		4.41	37.71	
				f_{SUB} = 32.768 kHz Note 4, Square wave input	T_A = -40°C		0.20	1.97	μA
					T_A = +25°C		0.29	2.00	
					T_A = +50°C		0.54	5.33	
					T_A = +70°C		0.99	10.94	
					T_A = +85°C		1.70	19.62	
					T_A = +105°C		4.10	41.82	
				f_{SUB} = 32.768 kHz Note 5, Resonator connection	T_A = -40°C		0.21	2.04	μA
					T_A = +25°C		0.33	2.28	
					T_A = +50°C		0.49	4.98	
					T_A = +70°C		1.05	11.36	
					T_A = +85°C		1.76	20.04	
					T_A = +105°C		4.20	42.52	
	I_{DD3}	STOP mode	RAMSDS = 0 Note 6		T_A = -40°C		0.15	1.45	μA
					T_A = +25°C		0.23	1.45	
					T_A = +50°C		0.45	4	
					T_A = +70°C		0.9	9	
					T_A = +85°C		1.6	17	
					T_A = +105°C		4	35	
			RAMSDS = 1 Note 7		T_A = -40°C		0.14	1.45	μA
					T_A = +25°C		0.21	1.45	
					T_A = +50°C		0.4	3.5	
					T_A = +70°C		0.8	8.5	
					T_A = +85°C		1.4	15	
					T_A = +105°C		3.2	30	
			RAMSDS = 1, 128-Hz realtime clock operation Note 8		T_A = -40°C		0.22	1.53	μA
					T_A = +25°C		0.32	1.56	
					T_A = +50°C		0.53	3.62	
					T_A = +70°C		0.94	8.64	
					T_A = +85°C		1.55	15.15	
					T_A = +105°C		3.40	30.20	

(Notes and Remarks are listed on the next page.)

Downloaded from Arrow.com.

Note 1. The listed currents are the total currents flowing into V_{DD} and EV_{DD0}, including the input leakage currents flowing when the level of the input pin is fixed to V_{DD}, EV_{DD0} or V_{SS}, EV_{SS0}. In the subsystem clock operation mode or the STOP mode, the currents in both the "Typ." and "Max." columns do not include the operating currents of the peripheral modules.

Note 2. The listed currents apply when the HALT instruction has been fetched from the flash memory for execution.

Note 3. The listed currents apply when the high-speed on-chip oscillator, middle-speed on-chip oscillator, high-speed system clock, and subsystem clock are stopped.

Note 4. The listed currents apply when the high-speed on-chip oscillator, middle-speed on-chip oscillator, high-speed system clock, and low-speed on-chip oscillator are stopped.

Note 5. The listed currents apply when the high-speed on-chip oscillator, middle-speed on-chip oscillator, high-speed system clock, and low-speed on-chip oscillator are stopped, and the setting of RTCLPC is 1, and the low power consumption oscillation 3 is specified (AMPHS1, AMPHS0 = 11B).

Note 6. The listed currents with this setting allow retention of the contents of the entire RAM area. The listed currents apply when the low-speed on-chip oscillator and subsystem clock oscillation are stopped. For the current for operation of the subsystem clock in the STOP mode, refer to that in the HALT mode.

Note 7. The listed currents with this setting allow retention of the contents of a specified 4-Kbyte area of the RAM. The listed currents apply when the low-speed on-chip oscillator and subsystem clock oscillation are stopped.

Note 8. The listed currents with this setting allow retention of the contents of a specified 4-Kbyte area of the RAM. The listed currents apply when the low-speed on-chip oscillator is stopped, the setting of RTCLPC is 1, and the low power consumption oscillation 3 is specified (AMPHS1, AMPHS0 = 11B). The current flowing into the RTC is included.

Remark 1. f_{IL}: Low-speed on-chip oscillator clock frequency

Remark 2. f_{SUB}: Subsystem clock frequency (XT1 clock oscillation frequency)

Downloaded from Arrow.com.

2. 30- to 64-pin package products with 192- to 256-Kbyte code flash memory and 80-pin package product with 128- to 256-Kbyte code flash memory

(T_A = -40 to +105°C, 1.6 V ≤ EV_{DD0} ≤ V_{DD} ≤ 5.5 V, V_{SS} = EV_{SS0} = 0 V) (1/4)

Item	Symbol	Conditions					Min.	Typ.	Max.	Unit
Supply current Note 1	I_{DD1}	Operating mode	HS (high-speed main) mode	f_{IH} = 32 MHz Note 2	Basic operation	V_{DD} = 5.0 V		1.4	—	mA
						V_{DD} = 1.8 V		1.4	—	
					Normal operation	V_{DD} = 5.0 V		3.0	5.0	mA
						V_{DD} = 1.8 V		3.0	5.0	
			LS (low-speed main) mode	f_{IH} = 24 MHz Note 2	Normal operation	V_{DD} = 5.0 V		2.3	3.8	mA
						V_{DD} = 1.8 V		2.3	3.8	
				f_{IH} = 16 MHz Note 2	Normal operation	V_{DD} = 5.0 V		1.7	2.8	mA
						V_{DD} = 1.8 V		1.7	2.7	
				f_{IM} = 4 MHz Note 3	Normal operation	V_{DD} = 5.0 V		0.4	0.7	mA
						V_{DD} = 1.6 V		0.4	0.7	
			LP (low-power main) mode	f_{IM} = 2 MHz Note 3	Normal operation	V_{DD} = 5.0 V		203	329	μA
						V_{DD} = 1.6 V		202	328	
				f_{IM} = 1 MHz Note 3	Normal operation	V_{DD} = 5.0 V		115	181	μA
						V_{DD} = 1.6 V		114	180	
			HS (high-speed main) mode	f_{MX} = 20 MHz Note 4, Square wave input	Normal operation	V_{DD} = 5.0 V		1.9	3.2	mA
						V_{DD} = 1.8 V		1.9	3.2	
			LS (low-speed main) mode	f_{MX} = 20 MHz Note 4, Square wave input	Normal operation	V_{DD} = 5.0 V		1.8	3.0	mA
						V_{DD} = 1.8 V		1.7	3.0	
				f_{MX} = 20 MHz Note 4, Resonator connection	Normal operation	V_{DD} = 5.0 V		1.9	3.2	mA
						V_{DD} = 1.8 V		1.9	3.2	
				f_{MX} = 10 MHz Note 4, Square wave input	Normal operation	V_{DD} = 5.0 V		0.9	1.6	mA
						V_{DD} = 1.8 V		0.9	1.6	
				f_{MX} = 10 MHz Note 4, Resonator connection	Normal operation	V_{DD} = 5.0 V		1.0	1.7	mA
						V_{DD} = 1.8 V		1.0	1.7	
				f_{MX} = 8 MHz Note 4, Square wave input	Normal operation	V_{DD} = 5.0 V		0.8	1.3	mA
						V_{DD} = 1.8 V		0.7	1.3	
				f_{MX} = 8 MHz Note 4, Resonator connection	Normal operation	V_{DD} = 5.0 V		0.9	1.4	mA
						V_{DD} = 1.8 V		0.8	1.4	

Note 1. The listed currents are the total currents flowing into V_{DD} and EV_{DD0}, including the input leakage currents flowing when the level of the input pin is fixed to V_{DD}, EV_{DD0} or V_{SS}, EV_{SS0}. The following points apply in the HS (high-speed main), LS (low-speed main), and LP (low-power main) modes.

- The currents in the "Typ." column do not include the operating currents of the peripheral modules.
- The currents in the "Max." column include the operating currents of the PCLBUZ, TAU, SAU, and IICA modules.

<R>

Note 2. The listed currents apply when the high-speed system clock, middle-speed on-chip oscillator, low-speed on-chip oscillator, and subsystem clock are stopped.

Note 3. The listed currents apply when the high-speed on-chip oscillator, high-speed system clock, low-speed on-chip oscillator, and subsystem clock are stopped.

Note 4. The listed currents apply when the high-speed on-chip oscillator, middle-speed on-chip oscillator, low-speed on-chip oscillator, and subsystem clock are stopped.

(Remarks are listed on the next page.)

Downloaded from Arrow.com.

Remark 1. f_{IH}: High-speed on-chip oscillator clock frequency
Remark 2. f_{IM}: Middle-speed on-chip oscillator clock frequency
Remark 3. f_{MX}: High-speed system clock frequency (X1 clock oscillation frequency or external main system clock frequency)
Remark 4. The typical value for the ambient operating temperature (T_A) is +25°C unless otherwise specified.

Downloaded from Arrow.com.

2. 30- to 64-pin package products with 192- to 256-Kbyte code flash memory and 80-pin package product with 128- to 256-Kbyte code flash memory

(T_A = -40 to +105°C, 1.6 V ≤ EV_{DD0} ≤ V_{DD} ≤ 5.5 V, V_{SS} = EV_{SS0} = 0 V) (2/4)

Item	Symbol	Conditions					Min.	Typ.	Max.	Unit
Supply current **Note 1**	I_{DD1}	Operating mode	Subsystem clock operation mode	f_{SUB} = 32.768 kHz**Note 2**, Low-speed on-chip oscillator operation	Normal operation	T_A = -40°C		3.3	6.1	μA
						T_A = +25°C		3.6	6.3	
						T_A = +50°C		3.9	9.6	
						T_A = +70°C		4.5	15.9	
						T_A = +85°C		5.4	25.3	
						T_A = +105°C		7.8	56.3	
				f_{SUB} = 32.768 kHz**Note 3**, Square wave input	Normal operation	T_A = -40°C		3.3	6.1	μA
						T_A = +25°C		3.5	6.4	
						T_A = +50°C		3.8	9.6	
						T_A = +70°C		4.4	16.1	
						T_A = +85°C		5.3	26.4	
						T_A = +105°C		7.8	57.0	
				f_{SUB} = 32.768 kHz**Note 3**, Resonator connection	Normal operation	T_A = -40°C		3.3	6.0	μA
						T_A = +25°C		3.5	6.0	
						T_A = +50°C		3.8	8.9	
						T_A = +70°C		4.4	15.3	
						T_A = +85°C		5.3	25.6	
						T_A = +105°C		7.9	55.3	

Note 1. The listed currents are the total currents flowing into V_{DD} and EV_{DD0}, including the input leakage currents flowing when the level of the input pin is fixed to V_{DD}, EV_{DD0} or V_{SS}, EV_{SS0}. In the subsystem clock operation mode, the currents in both the "Typ." and "Max." columns do not include the operating currents of the peripheral modules.

Note 2. The listed currents apply when the high-speed on-chip oscillator, middle-speed on-chip oscillator, high-speed system clock, and subsystem clock are stopped.

Note 3. The listed currents apply when the high-speed on-chip oscillator, high-speed system clock, middle-speed on-chip oscillator, and low-speed on-chip oscillator are stopped, and the low power consumption oscillation 3 is specified (AMPHS1, AMPHS0 = 11B).

Remark 1. f_{IL}: Low-speed on-chip oscillator clock frequency

Remark 2. f_{SUB}: Subsystem clock frequency (XT1 clock oscillation frequency)

Downloaded from Arrow.com.

2. 30- to 64-pin package products with 192- to 256-Kbyte code flash memory and 80-pin package product with 128- to 256-Kbyte code flash memory

(T_A = -40 to +105°C, 1.6 V ≤ EV_{DD0} ≤ V_{DD} ≤ 5.5 V, V_{SS} = EV_{SS0} = 0 V) (3/4)

Item	Symbol	Conditions				Min.	Typ.	Max.	Unit
Supply current Note 1	I_{DD2} Note 2	HALT mode	HS (high-speed main) mode	f_{IH} = 32 MHz Note 3	V_{DD} = 5.0 V		0.57	1.97	mA
					V_{DD} = 1.8 V		0.56	1.96	
			LS (low-speed main) mode	f_{IH} = 24 MHz Note 3	V_{DD} = 5.0 V		0.47	1.53	mA
					V_{DD} = 1.8 V		0.47	1.52	
				f_{IH} = 16 MHz Note 3	V_{DD} = 5.0 V		0.48	1.22	mA
					V_{DD} = 1.8 V		0.47	1.21	
				f_{IM} = 4 MHz Note 4	V_{DD} = 5.0 V		0.08	0.27	mA
					V_{DD} = 1.6 V		0.08	0.26	
			LP (low-power main) mode	f_{IM} = 2 MHz Note 4	V_{DD} = 5.0 V		38	126	μA
					V_{DD} = 1.6 V		37	125	
				f_{IM} = 1 MHz Note 4	V_{DD} = 5.0 V		32	79	μA
					V_{DD} = 1.6 V		32	79	
			HS (high-speed main) mode	f_{MX} = 20 MHz Note 5, Square wave input	V_{DD} = 5.0 V		0.23	1.07	mA
					V_{DD} = 1.8 V		0.19	1.03	
			LS (low-speed main) mode	f_{MX} = 20 MHz Note 5, Square wave input	V_{DD} = 5.0 V		0.23	1.07	mA
					V_{DD} = 1.8 V		0.19	1.03	
				f_{MX} = 20 MHz Note 5, Resonator connection	V_{DD} = 5.0 V		0.41	1.30	mA
					V_{DD} = 1.8 V		0.40	1.28	
				f_{MX} = 10 MHz Note 5, Square wave input	V_{DD} = 5.0 V		0.14	0.57	mA
					V_{DD} = 1.8 V		0.12	0.54	
				f_{MX} = 10 MHz Note 5, Resonator connection	V_{DD} = 5.0 V		0.24	0.69	mA
					V_{DD} = 1.8 V		0.23	0.68	
				f_{MX} = 8 MHz Note 5, Square wave input	V_{DD} = 5.0 V		0.12	0.47	mA
					V_{DD} = 1.8 V		0.10	0.44	
				f_{MX} = 8 MHz Note 5, Resonator connection	V_{DD} = 5.0 V		0.21	0.58	mA
					V_{DD} = 1.8 V		0.20	0.57	

Note 1. The listed currents are the total currents flowing into V_{DD} and EV_{DD0}, including the input leakage currents flowing when the level of the input pin is fixed to V_{DD}, EV_{DD0} or V_{SS}, EV_{SS0}. The following points apply in the HS (high-speed main), LS (low-speed main), and LP (low-power main) modes.

- The currents in the "Typ." column do not include the operating currents of the peripheral modules.
- The currents in the "Max." column include the operating currents of the PCLBUZ, TAU, SAU, and IICA modules.

<R>

Note 2. The listed currents apply when the HALT instruction has been fetched from the flash memory for execution.

Note 3. The listed currents apply when the high-speed system clock, middle-speed on-chip oscillator, low-speed on-chip oscillator, and subsystem clock are stopped.

Note 4. The listed currents apply when the high-speed on-chip oscillator, high-speed system clock, low-speed on-chip oscillator, and subsystem clock are stopped.

Note 5. The listed currents apply when the high-speed on-chip oscillator, middle-speed on-chip oscillator, low-speed on-chip oscillator, and subsystem clock are stopped.

(Remarks are listed on the next page.)

Downloaded from Arrow.com.

Remark 1. f_{IH}: High-speed on-chip oscillator clock frequency
Remark 2. f_{IM}: Middle-speed on-chip oscillator clock frequency
Remark 3. f_{MX}: High-speed system clock frequency (X1 clock oscillation frequency or external main system clock frequency)
Remark 4. The typical value for the ambient operating temperature (T_A) is +25°C unless otherwise specified.

Downloaded from Arrow.com.

2. 30- to 64-pin package products with 192- to 256-Kbyte code flash memory and 80-pin package product with 128- to 256-Kbyte code flash memory

(T_A = -40 to +105°C, 1.6 V ≤ EV_{DD0} ≤ V_{DD} ≤ 5.5 V, V_{SS} = EV_{SS0} = 0 V) (4/4)

Item	Symbol	Conditions				Min.	Typ.	Max.	Unit
Supply current Note 1	I_{DD2} Note 2	HALT mode	Subsystem clock operation mode	f_{SUB} = 32.768 kHz Note 3, Low-speed on-chip oscillator operation	T_A = -40°C		0.62	2.94	μA
					T_A = +25°C		0.74	3.00	
					T_A = +50°C		0.88	6.00	
					T_A = +70°C		1.22	12.01	
					T_A = +85°C		2.69	22.92	
					T_A = +105°C		5.08	54.47	
				f_{SUB} = 32.768 kHz, Square wave input Note 4	T_A = -40°C		0.25	2.54	μA
					T_A = +25°C		0.37	2.73	
					T_A = +50°C		0.74	7.35	
					T_A = +70°C		1.33	15.13	
					T_A = +85°C		2.35	27.33	
					T_A = +105°C		4.81	62.95	
				f_{SUB} = 32.768 kHz, Resonator connection Note 5	T_A = -40°C		0.27	2.68	μA
					T_A = +25°C		0.39	2.87	
					T_A = +50°C		0.78	7.63	
					T_A = +70°C		1.34	15.20	
					T_A = +85°C		2.35	27.33	
					T_A = +105°C		4.67	61.97	
	I_{DD3}	STOP mode	RAMSDS = 0 Note 6		T_A = -40°C		0.19	2.00	μA
					T_A = +25°C		0.30	2.00	
					T_A = +50°C		0.65	5.00	
					T_A = +70°C		1.20	11.00	
					T_A = +85°C		2.20	20.00	
					T_A = +105°C		4.50	50.00	
			RAMSDS = 1 Note 7		T_A = -40°C		0.18	2.00	μA
					T_A = +25°C		0.29	2.00	
					T_A = +50°C		0.60	4.50	
					T_A = +70°C		1.10	10.00	
					T_A = +85°C		2.00	19.00	
					T_A = +105°C		4.00	45.00	
			RAMSDS = 1, 128-Hz realtime clock operation Note 8		T_A = -40°C		0.23	2.05	μA
					T_A = +25°C		0.40	2.11	
					T_A = +50°C		0.72	4.62	
					T_A = +70°C		1.23	10.13	
					T_A = +85°C		2.14	19.14	
					T_A = +105°C		4.16	45.16	

(Notes and Remarks are listed on the next page.)

Downloaded from Arrow.com.

Note 1. The listed currents are the total currents flowing into V_{DD} and EV_{DD0}, including the input leakage currents flowing when the level of the input pin is fixed to V_{DD}, EV_{DD0} or V_{SS}, EV_{SS0}. In the subsystem clock operation mode or the STOP mode, the currents in both the "Typ." and "Max." columns do not include the operating currents of the peripheral modules.

Note 2. The listed currents apply when the HALT instruction has been fetched from the flash memory for execution.

Note 3. The listed currents apply when the high-speed on-chip oscillator, middle-speed on-chip oscillator, high-speed system clock, and subsystem clock are stopped.

Note 4. The listed currents apply when the high-speed on-chip oscillator, middle-speed on-chip oscillator, high-speed system clock, and low-speed on-chip oscillator are stopped.

Note 5. The listed currents apply when the high-speed on-chip oscillator, middle-speed on-chip oscillator, high-speed system clock, and low-speed on-chip oscillator are stopped, and the setting of RTCLPC is 1, and the low power consumption oscillation 3 is specified (AMPHS1, AMPHS0 = 11B).

Note 6. The listed currents with this setting allow retention of the contents of the entire RAM area. The listed currents apply when the low-speed on-chip oscillator and subsystem clock oscillation are stopped. For the current for operation of the subsystem clock in the STOP mode, refer to that in the HALT mode.

Note 7. The listed currents with this setting allow retention of the contents of a specified 4-Kbyte area of the RAM. The listed currents apply when the low-speed on-chip oscillator and subsystem clock oscillation are stopped.

Note 8. The listed currents with this setting allow retention of the contents of a specified 4-Kbyte area of the RAM. The listed currents apply when the low-speed on-chip oscillator is stopped, the setting of RTCLPC is 1, and the low power consumption oscillation 3 is specified (AMPHS1, AMPHS0 = 11B). The current flowing into the RTC is included.

Remark 1. f_{IL}: Low-speed on-chip oscillator clock frequency

Remark 2. f_{SUB}: Subsystem clock frequency (XT1 clock oscillation frequency)

Downloaded from Arrow.com.

3. 44- to 80-pin package products with 384- to 768-Kbyte code flash memory and 100- to 128-pin package products

(T_A = -40 to +105°C, 1.6 V ≤ EV_{DD0} = EV_{DD1} ≤ V_{DD} ≤ 5.5 V, V_{SS} = EV_{SS0} = EV_{SS1} = 0 V) (1/4)

Item	Symbol	Conditions					Min.	Typ.	Max.	Unit
Supply current Note 1	I_{DD1}	Operating mode	HS (high-speed main) mode	f_{IH} = 32 MHz Note 2	Basic operation	V_{DD} = 5.0 V		1.6	—	mA
						V_{DD} = 1.8 V		1.5	—	
					Normal operation	V_{DD} = 5.0 V		3.5	5.6	mA
						V_{DD} = 1.8 V		3.5	5.6	
			LS (low-speed main) mode	f_{IH} = 24 MHz Note 2	Normal operation	V_{DD} = 5.0 V		2.6	4.2	mA
						V_{DD} = 1.8 V		2.6	4.2	
				f_{IH} = 16 MHz Note 2	Normal operation	V_{DD} = 5.0 V		2.0	3.1	mA
						V_{DD} = 1.8 V		1.9	3.1	
				f_{IM} = 4 MHz Note 3	Normal operation	V_{DD} = 5.0 V		0.5	0.9	mA
						V_{DD} = 1.6 V		0.5	0.8	
			LP (low-power main) mode	f_{IM} = 2 MHz Note 3	Normal operation	V_{DD} = 5.0 V		229	361	μA
						V_{DD} = 1.6 V		227	358	
				f_{IM} = 1 MHz Note 3	Normal operation	V_{DD} = 5.0 V		128	197	μA
						V_{DD} = 1.6 V		125	193	
			HS (high-speed main) mode	f_{MX} = 20 MHz Note 4, Square wave input	Normal operation	V_{DD} = 5.0 V		2.2	3.5	mA
						V_{DD} = 1.8 V		2.2	3.5	
			LS (low-speed main) mode	f_{MX} = 20 MHz Note 4, Square wave input	Normal operation	V_{DD} = 5.0 V		2.1	3.4	mA
						V_{DD} = 1.8 V		2.0	3.3	
				f_{MX} = 20 MHz Note 4, Resonator connection	Normal operation	V_{DD} = 5.0 V		2.2	3.6	mA
						V_{DD} = 1.8 V		2.2	3.5	
				f_{MX} = 10 MHz Note 4, Square wave input	Normal operation	V_{DD} = 5.0 V		1.1	1.8	mA
						V_{DD} = 1.8 V		1.1	1.8	
				f_{MX} = 10 MHz Note 4, Resonator connection	Normal operation	V_{DD} = 5.0 V		1.2	1.9	mA
						V_{DD} = 1.8 V		1.2	1.9	
				f_{MX} = 8 MHz Note 4, Square wave input	Normal operation	V_{DD} = 5.0 V		0.9	1.5	mA
						V_{DD} = 1.8 V		0.9	1.5	
				f_{MX} = 8 MHz Note 4, Resonator connection	Normal operation	V_{DD} = 5.0 V		1.0	1.6	mA
						V_{DD} = 1.8 V		1.0	1.6	

Note 1. The listed currents are the total currents flowing into V_{DD}, EV_{DD0} and EV_{DD1}, including the input leakage currents flowing when the level of the input pin is fixed to V_{DD}, EV_{DD0}, EV_{DD1} or V_{SS}, EV_{SS0}, EV_{SS1}. The following points apply in the HS (high-speed main), LS (low-speed main), and LP (low-power main) modes.

- The currents in the "Typ." column do not include the operating currents of the peripheral modules.
- The currents in the "Max." column include the operating currents of the PCLBUZ, TAU, SAU, and IICA modules.

<R>

Note 2. The listed currents apply when the high-speed system clock, middle-speed on-chip oscillator, low-speed on-chip oscillator, and subsystem clock are stopped.

Note 3. The listed currents apply when the high-speed on-chip oscillator, high-speed system clock, low-speed on-chip oscillator, and subsystem clock are stopped.

Note 4. The listed currents apply when the high-speed on-chip oscillator, middle-speed on-chip oscillator, low-speed on-chip oscillator, and subsystem clock are stopped.

(Remarks are listed on the next page.)

Downloaded from Arrow.com.

Remark 1. f_{IH}: High-speed on-chip oscillator clock frequency
Remark 2. f_{IM}: Middle-speed on-chip oscillator clock frequency
Remark 3. f_{MX}: High-speed system clock frequency (X1 clock oscillation frequency or external main system clock frequency)
Remark 4. The typical value for the ambient operating temperature (T_A) is +25°C unless otherwise specified.

Downloaded from Arrow.com.

3. 44- to 80-pin package products with 384- to 768-Kbyte code flash memory and 100- to 128-pin package products

(T_A = -40 to +105°C, 1.6 V ≤ EV_{DD0} = EV_{DD1} ≤ V_{DD} ≤ 5.5 V, V_{SS} = EV_{SS0} = EV_{SS1} = 0 V) (2/4)

Item	Symbol	Conditions					Min.	Typ.	Max.	Unit
Supply current **Note 1**	I_{DD1}	Operating mode	Subsystem clock operation mode	f_{SUB} = 32.768 kHz**Note 2**, Low-speed on-chip oscillator operation	Normal operation	T_A = -40°C		3.8	7.7	μA
						T_A = +25°C		4.1	8.0	
						T_A = +50°C		4.6	13.5	
						T_A = +70°C		5.6	24.0	
						T_A = +85°C		7.1	40.8	
						T_A = +105°C		11.1	88.8	
				f_{SUB} = 32.768 kHz**Note 3**, Square wave input	Normal operation	T_A = -40°C		3.8	7.7	μA
						T_A = +25°C		4.0	8.0	
						T_A = +50°C		4.5	13.6	
						T_A = +70°C		5.3	24.1	
						T_A = +85°C		6.7	40.3	
						T_A = +105°C		10.7	88.1	
				f_{SUB} = 32.768 kHz**Note 3**, Resonator connection	Normal operation	T_A = -40°C		3.8	7.4	μA
						T_A = +25°C		4.1	7.8	
						T_A = +50°C		4.5	12.6	
						T_A = +70°C		5.4	24.2	
						T_A = +85°C		6.8	39.8	
						T_A = +105°C		10.8	87.4	

Note 1. The listed currents are the total currents flowing into V_{DD}, EV_{DD0} and EV_{DD1}, including the input leakage currents flowing when the level of the input pin is fixed to V_{DD}, EV_{DD0}, EV_{DD1} or V_{SS}, EV_{SS0}, EV_{SS1}. In the subsystem clock operation mode, the currents in both the "Typ." and "Max." columns do not include the operating currents of the peripheral modules.

Note 2. The listed currents apply when the high-speed on-chip oscillator, middle-speed on-chip oscillator, high-speed system clock, and subsystem clock are stopped.

Note 3. The listed currents apply when the high-speed on-chip oscillator, high-speed system clock, middle-speed on-chip oscillator, and low-speed on-chip oscillator are stopped, and the low power consumption oscillation 3 is specified (AMPHS1, AMPHS0 = 11B).

Remark 1. f_{IL}: Low-speed on-chip oscillator clock frequency

Remark 2. f_{SUB}: Subsystem clock frequency (XT1 clock oscillation frequency)

Downloaded from Arrow.com.

3. 44- to 80-pin package products with 384- to 768-Kbyte code flash memory and 100- to 128-pin package products

(T_A = -40 to +105°C, 1.6 V ≤ EV_{DD0} = EV_{DD1} ≤ V_{DD} ≤ 5.5 V, V_{SS} = EV_{SS0} = EV_{SS1} = 0 V) (3/4)

Item	Symbol	Conditions				Min.	Typ.	Max.	Unit
Supply current Note 1	I_{DD2} Note 2	HALT mode	HS (high-speed main) mode	f_{IH} = 32 MHz Note 3	V_{DD} = 5.0 V		0.60	2.00	mA
					V_{DD} = 1.8 V		0.59	1.99	
			LS (low-speed main) mode	f_{IH} = 24 MHz Note 3	V_{DD} = 5.0 V		0.49	1.56	mA
					V_{DD} = 1.8 V		0.48	1.55	
				f_{IH} = 16 MHz Note 3	V_{DD} = 5.0 V		0.49	1.24	mA
					V_{DD} = 1.8 V		0.48	1.23	
				f_{IM} = 4 MHz Note 4	V_{DD} = 5.0 V		0.09	0.28	mA
					V_{DD} = 1.6 V		0.09	0.27	
			LP (low-power main) mode	f_{IM} = 2 MHz Note 4	V_{DD} = 5.0 V		40	129	μA
					V_{DD} = 1.6 V		37	125	
				f_{IM} = 1 MHz Note 4	V_{DD} = 5.0 V		33	80	μA
					V_{DD} = 1.6 V		32	79	
			HS (high-speed main) mode	f_{MX} = 20 MHz Note 5, Square wave input	V_{DD} = 5.0 V		0.25	1.10	mA
					V_{DD} = 1.8 V		0.21	1.05	
			LS (low-speed main) mode	f_{MX} = 20 MHz Note 5, Square wave input	V_{DD} = 5.0 V		0.25	1.10	mA
					V_{DD} = 1.8 V		0.21	1.05	
				f_{MX} = 20 MHz Note 5, Resonator connection	V_{DD} = 5.0 V		0.41	1.30	mA
					V_{DD} = 1.8 V		0.40	1.28	
				f_{MX} = 10 MHz Note 5, Square wave input	V_{DD} = 5.0 V		0.15	0.59	mA
					V_{DD} = 1.8 V		0.13	0.55	
				f_{MX} = 10 MHz Note 5, Resonator connection	V_{DD} = 5.0 V		0.25	0.70	mA
					V_{DD} = 1.8 V		0.24	0.69	
				f_{MX} = 8 MHz Note 5, Square wave input	V_{DD} = 5.0 V		0.13	0.48	mA
					V_{DD} = 1.8 V		0.11	0.45	
				f_{MX} = 8 MHz Note 5, Resonator connection	V_{DD} = 5.0 V		0.22	0.59	mA
					V_{DD} = 1.8 V		0.21	0.58	

Note 1. The listed currents are the total currents flowing into V_{DD}, EV_{DD0} and EV_{DD1}, including the input leakage currents flowing when the level of the input pin is fixed to V_{DD}, EV_{DD0}, EV_{DD1} or V_{SS}, EV_{SS0}, EV_{SS1}. The following points apply in the HS (high-speed main), LS (low-speed main), and LP (low-power main) modes.

- The currents in the "Typ." column do not include the operating currents of the peripheral modules.
- The currents in the "Max." column include the operating currents of the PCLBUZ, TAU, SAU, and IICA modules.

<R>

Note 2. The listed currents apply when the HALT instruction has been fetched from the flash memory for execution.

Note 3. The listed currents apply when the high-speed system clock, middle-speed on-chip oscillator, low-speed on-chip oscillator, and subsystem clock are stopped.

Note 4. The listed currents apply when the high-speed on-chip oscillator, high-speed system clock, low-speed on-chip oscillator, and subsystem clock are stopped.

Note 5. The listed currents apply when the high-speed on-chip oscillator, middle-speed on-chip oscillator, low-speed on-chip oscillator, and subsystem clock are stopped.

(Remarks are listed on the next page.)

Downloaded from Arrow.com.

Remark 1. f_{IH}: High-speed on-chip oscillator clock frequency
Remark 2. f_{IM}: Middle-speed on-chip oscillator clock frequency
Remark 3. f_{MX}: High-speed system clock frequency (X1 clock oscillation frequency or external main system clock frequency)
Remark 4. The typical value for the ambient operating temperature (T_A) is +25°C unless otherwise specified.

Downloaded from Arrow.com.

3. 44- to 80-pin package products with 384- to 768-Kbyte code flash memory and 100- to 128-pin package products

(T_A = -40 to +105°C, 1.6 V ≤ EV_{DD0} = EV_{DD1} ≤ V_{DD} ≤ 5.5 V, V_{SS} = EV_{SS0} = EV_{SS1} = 0 V) (4/4)

Item	Symbol	Conditions				Min.	Typ.	Max.	Unit
Supply current Note 1	I_{DD2} Note 2	HALT mode	Subsystem clock operation mode	f_{SUB} = 32.768 kHz Note 3, Low-speed on-chip oscillator operation	T_A = -40°C		0.62	3.95	μA
					T_A = +25°C		0.78	4.00	
					T_A = +50°C		1.03	9.16	
					T_A = +70°C		1.62	19.34	
					T_A = +85°C		3.50	37.35	
					T_A = +105°C		6.77	85.36	
				f_{SUB} = 32.768 kHz, Square wave input Note 4	T_A = -40°C		0.25	3.55	μA
					T_A = +25°C		0.41	3.73	
					T_A = +50°C		0.90	10.93	
					T_A = +70°C		1.76	23.42	
					T_A = +85°C		2.92	41.07	
					T_A = +105°C		6.27	94.30	
				f_{SUB} = 32.768 kHz, Resonator connection Note 5	T_A = -40°C		0.27	3.62	μA
					T_A = +25°C		0.43	3.87	
					T_A = +50°C		0.92	11.07	
					T_A = +70°C		1.79	23.63	
					T_A = +85°C		2.94	41.21	
					T_A = +105°C		6.28	94.37	
	I_{DD3}	STOP mode	RAMSDS = 0 Note 6		T_A = -40°C		0.21	3.00	μA
					T_A = +25°C		0.35	3.00	
					T_A = +50°C		0.75	8.00	
					T_A = +70°C		1.60	18.00	
					T_A = +85°C		2.80	34.00	
					T_A = +105°C		6.00	80.00	
			RAMSDS = 1 Note 7		T_A = -40°C		0.19	3.00	μA
					T_A = +25°C		0.32	3.00	
					T_A = +50°C		0.65	7.00	
					T_A = +70°C		1.25	17.00	
					T_A = +85°C		2.10	30.00	
					T_A = +105°C		4.50	70.00	
			RAMSDS = 1, 128-Hz realtime clock operation Note 8		T_A = -40°C		0.27	3.08	μA
					T_A = +25°C		0.42	3.10	
					T_A = +50°C		0.76	7.11	
					T_A = +70°C		1.38	17.13	
					T_A = +85°C		2.23	30.13	
					T_A = +105°C		4.64	70.14	

(Notes and Remarks are listed on the next page.)

Downloaded from Arrow.com.

Note 1. The listed currents are the total currents flowing into V_{DD}, EV_{DD0} and EV_{DD1}, including the input leakage currents flowing when the level of the input pin is fixed to V_{DD}, EV_{DD0}, EV_{DD1} or V_{SS}, EV_{SS0}, EV_{SS1}. In the subsystem clock operation mode or the STOP mode, the currents in both the "Typ." and "Max." columns do not include the operating currents of the peripheral modules.

Note 2. The listed currents apply when the HALT instruction has been fetched from the flash memory for execution.

Note 3. The listed currents apply when the high-speed on-chip oscillator, middle-speed on-chip oscillator, high-speed system clock, and subsystem clock are stopped.

Note 4. The listed currents apply when the high-speed on-chip oscillator, middle-speed on-chip oscillator, high-speed system clock, and low-speed on-chip oscillator are stopped.

Note 5. The listed currents apply when the high-speed on-chip oscillator, middle-speed on-chip oscillator, high-speed system clock, and low-speed on-chip oscillator are stopped, and the setting of RTCLPC is 1, and the low power consumption oscillation 3 is specified (AMPHS1, AMPHS0 = 11B).

Note 6. The listed currents with this setting allow retention of the contents of the entire RAM area. The listed currents apply when the low-speed on-chip oscillator and subsystem clock oscillation are stopped. For the current for operation of the subsystem clock in the STOP mode, refer to that in the HALT mode.

Note 7. The listed currents with this setting allow retention of the contents of a specified 4-Kbyte area of the RAM. The listed currents apply when the low-speed on-chip oscillator and subsystem clock oscillation are stopped.

Note 8. The listed currents with this setting allow retention of the contents of a specified 4-Kbyte area of the RAM. The listed currents apply when the low-speed on-chip oscillator is stopped, the setting of RTCLPC is 1, and the low power consumption oscillation 3 is specified (AMPHS1, AMPHS0 = 11B). The current flowing into the RTC is included.

Remark 1. f_{IL}: Low-speed on-chip oscillator clock frequency

Remark 2. f_{SUB}: Subsystem clock frequency (XT1 clock oscillation frequency)

Downloaded from Arrow.com.

4. Peripheral Functions (Common to all products)

(T_A = -40 to +105°C, 1.6 V ≤ EV_{DD0} = EV_{DD1} ≤ V_{DD} ≤ 5.5 V, V_{SS} = EV_{SS0} = EV_{SS1} = 0 V) (1/2)

Item	Symbol	Conditions		Min.	Typ.	Max.	Unit
High-speed on-chip oscillator operating current	I_{FIH} **Note 1**				380		μA
Middle-speed on-chip oscillator operating current	I_{FIM} **Note 1**				20		μA
Low-speed on-chip oscillator operating current	I_{FIL} **Note 1**				0.3		μA
RTC operating current	I_{RTC} **Notes 1, 2, 3**	f_{RTCCLK} = 32.768 kHz			0.005		μA
		f_{RTCCLK} = 128 Hz			0.002		μA
32-bit interval timer operating current	I_{IT} **Notes 1, 2, 4**				0.04		μA
Watchdog timer operating current	I_{WDT} **Notes 1, 2, 5**	f_{IL} = 32.768 kHz (typ.)			0.32		μA
A/D converter operating current	I_{ADC} **Notes 1, 6**	When conversion at maximum speed	Normal mode, AV_{REFP} = V_{DD} = 5.0 V		0.95	1.6	mA
			Low voltage mode, AV_{REFP} = V_{DD} = 3.0 V		0.5	0.75	mA
AV_{REFP} current	I_{ADREF} **Note 7**	AV_{REFP} = 5.0 V			52		μA
A/D converter internal reference voltage current	I_{ADREF} **Note 1**				114		μA
Temperature sensor operating current	I_{TMPS} **Note 1**				110		μA
D/A converter operating current	I_{DAC} **Notes 1, 8**	Per channel			150		μA
Comparator operating current	I_{CMP} **Notes 1, 9**				6		μA
LVD operating current	I_{LVD0} **Notes 1, 10**				0.02		μA
	I_{LVD1} **Notes 1, 10**				0.02		μA
Self-programming operating current	I_{FSP} **Notes 1, 11**				2.5	12.2	mA
Data flash memory rewrite operating current	I_{BGO} **Notes 1, 12**				2.5	12.2	mA

Downloaded from Arrow.com.

(T_A = -40 to +105°C, 1.6 V ≤ EV_{DD0} = EV_{DD1} ≤ V_{DD} ≤ 5.5 V, V_{SS} = EV_{SS0} = EV_{SS1} = 0 V) (2/2)

Item	Symbol	Conditions			Min.	Typ.	Max.	Unit
SNOOZE mode sequencer operating current	I_{SMS} **Notes 1, 13**	f_{IH} = 32 MHz		30- to 64-pin package products with 96- to 128-Kbyte code flash memory		1.1		mA
				30- to 64-pin package products with 192- to 256-Kbyte code flash memory and 80-pin package product with 128- to 256-Kbyte code flash memory		1.1		
				44- to 80-pin package products with 384- to 768-Kbyte code flash memory and 100- to 128-pin package products		1.4		
		f_{IL} = 32.768 kHz		30- to 64-pin package products with 96- to 128-Kbyte code flash memory		1.2		μA
				30- to 64-pin package products with 192- to 256-Kbyte code flash memory and 80-pin package product with 128- to 256-Kbyte code flash memory		1.2		
				44- to 80-pin package products with 384- to 768-Kbyte code flash memory and 100- to 128-pin package products		1.6		
SNOOZE operating current	I_{SNOZ} **Note 1**	f_{IH}=32 MHz	ADC to be in use	The ADC is shifting from the STOP mode to the SNOOZE mode.**Note 14**		0.6	0.81	mA
				The ADC is operating in the low-voltage mode. AV_{REFP} = V_{DD} = 3.0 V		1.2	1.56	
			Simplified SPI (CSI)/UART to be in use			0.7	0.92	mA
			SMS**Note 15**	30- to 64-pin package products with 96- to 128-Kbyte code flash memory		1.6		mA
				30- to 64-pin package products with 192- to 256-Kbyte code flash memory and 80-pin package product with 128- to 256-Kbyte code flash memory		1.7		
				44- to 80-pin package products with 384- to 768-Kbyte code flash memory, and 100- to 128-pin package products		2.0		
Remote control signal receiver operating current	I_{REM} **Notes 1, 16**					0.03		μA
Low-speed peripheral clock supply current	I_{SXP} **Notes 1, 17**	RTCLPC = 0				0.22		μA
Output current control operating current	I_{CCDA} **Notes 1, 18**	The setting of the CCDE register is not 00H.				100		μA
	I_{CCDP} **Notes 19, 20**	Per single output current control port		Setting of the low-level output current: Hi-Z		30		μA
				Setting of the low-level output current: 2 to 15 mA		200		μA
Operating current of the true random number generator	I_{TRNG} **Note 1**					1.1		mA

(Notes and Remarks continue on the next page.)

Downloaded from Arrow.com.

Note 1. This current flows into V_{DD}.

Note 2. The listed currents apply when the high-speed on-chip oscillator, middle-speed on-chip oscillator, and high-speed system clock are stopped.

Note 3. This current flows into the realtime clock (RTC). It does not include the operating current of the low-speed on-chip oscillator or the XT1 oscillator. The supply current of the RL78 microcontrollers is the sum of either I_{DD1} or I_{DD2}, and I_{RTC}, when the realtime clock is operating or in the HALT mode. When the low-speed on-chip oscillator is selected, I_{FIL} should be included in the supply current. I_{DD2} in the subsystem clock operation mode includes the operating current of the realtime clock.

Note 4. This current only flows to the 32-bit interval timer. It does not include the operating current of the low-speed on-chip oscillator or the XT1 oscillator. The supply current of the RL78 microcontrollers is the sum of either I_{DD1} or I_{DD2}, and I_{IT}, when the 32-bit interval timer is operating or in the HALT mode. When the low-speed on-chip oscillator is selected, I_{FIL} should be included in the supply current.

Note 5. This current only flows to the watchdog timer. It includes the operating current of the low-speed on-chip oscillator. The supply current of the RL78 microcontrollers is the sum of I_{DD1}, I_{DD2} or I_{DD3} and I_{WDT} when the watchdog timer is operating.

Note 6. This current only flows to the A/D converter. The supply current of the RL78 microcontrollers is the sum of I_{DD1} or I_{DD2} and I_{ADC} when the A/D converter is operating or in the HALT mode.

Note 7. This current flows into AV_{REFP}.

Note 8. This current only flows to the D/A converter. The supply current of the RL78 microcontrollers is the sum of the values of either I_{DD1} or I_{DD2}, and I_{DAC}, when the D/A converter is operating or in the HALT mode.

Note 9. This current only flows to the comparator. The supply current of the RL78 microcontrollers is the sum of I_{DD1}, I_{DD2} or I_{DD3} and I_{CMP} when the comparator is in operation.

Note 10. This current only flows to the LVD circuit. The supply current of the RL78 microcontrollers is the sum of I_{DD1}, I_{DD2} or I_{DD3} and I_{LVD} when the LVD circuit is in operation.

Note 11. This current only flows during self programming.

Note 12. This current only flows while the data flash memory is being rewritten.

Note 13. This current only flows into the SNOOZE mode sequencer. Note that the operating current of the low-speed on-chip oscillator and the XT1 oscillator are not included. The supply current of the RL78 microcontrollers is the sum of either I_{DD1} or I_{DD2}, and I_{SMS}, when the SNOOZE mode sequencer is operating or in the HALT mode.

Note 14. For shift time to the SNOOZE mode, see **23.3.3 SNOOZE mode** in the RL78/G23 User's Manual.

Note 15. The listed values apply when the SNOOZE mode sequencer is in normal operation equivalent to I_{DD1}. They do not include the current flowing into the peripheral functions other than the SNOOZE mode sequencer.

Note 16. This current flows into the remote control signal receiver. It does not include the operating current of the low-speed on-chip oscillator or the XT1 oscillator. The supply current of the RL78 microcontrollers is the sum of either I_{DD1} or I_{DD2}, and I_{IT}, when the remote control signal receiver is operating or in the HALT mode. When the low-speed on-chip oscillator is selected, I_{FIL} should be included in the supply current.

Note 17. This current is added to the supply current in the HALT mode when the setting of RTCLPC is 0 in the STOP mode, or when the setting of RTCLPC is 0 with the subsystem clock X (f_{SX}) selected as the CPU clock, while the subsystem clock X (f_{SX}) is oscillating.

Note 18. This current is added to the supply current when the output voltage control port is set.

Note 19. This current does not include the current flowing into the I/O port pins.

Note 20. This current only flows to EV_{DD0} and EV_{DD1}.

Remark 1. f_{IL}: Low-speed on-chip oscillator clock frequency

Remark 2. f_{SX}: Subsystem clock X frequency

Remark 3. f_{CLK}: CPU/peripheral hardware clock frequency

Remark 4. The typical value for the ambient operating temperature (T_A) is +25°C unless otherwise specified.

Downloaded from Arrow.com.

2.4 AC Characteristics

(T_A = -40 to +105°C, 1.6 V ≤ EV_{DD0} = EV_{DD1} ≤ V_{DD} ≤ 5.5 V, V_{SS} = EV_{SS0} = EV_{SS1} = 0 V)

Item	Symbol	Conditions			Min.	Typ.	Max.	Unit
Instruction cycle (minimum instruction execution time)	T_{CY}	Main system clock (f_{MAIN}) operation	HS (high-speed main) mode	1.8 V ≤ V_{DD} ≤ 5.5 V	0.03125		1	μs
				1.6 V ≤ V_{DD} ≤ 1.8 V	0.25		1	μs
			LS (low-speed main) mode	1.8 V ≤ V_{DD} ≤ 5.5 V	0.04167		1	μs
				1.6 V ≤ V_{DD} ≤ 1.8 V	0.25		1	μs
			LP (low-power main) mode	1.6 V ≤ V_{DD} ≤ 5.5 V	0.5		1	μs
		Subsystem clock (f_{SUB}) operation		1.6 V ≤ V_{DD} ≤ 5.5 V	26.041	30.5	31.3	μs
		In the self programming mode	HS (high-speed main) mode	1.8 V ≤ V_{DD} ≤ 5.5 V	0.03125		1	μs
				1.6 V ≤ V_{DD} ≤ 1.8 V	0.5		1	μs
			LS (low-speed main) mode	1.8 V ≤ V_{DD} ≤ 5.5 V	0.04167		1	μs
				1.6 V ≤ V_{DD} ≤ 1.8 V	0.5		1	μs
External system clock frequency	f_{EX}	1.8 V ≤ V_{DD} ≤ 5.5 V			1.0		20.0	MHz
		1.6 V ≤ V_{DD} < 1.8 V			1.0		4.0	MHz
	f_{EXS}				32		38.4	kHz
External system clock input high-level width, low-level width	t_{EXH}, t_{EXL}	1.8 V ≤ V_{DD} ≤ 5.5 V			24			ns
		1.6 V ≤ V_{DD} < 1.8 V			120			ns
	t_{EXHS}, t_{EXLS}				13.7			μs
TI00 to TI07, TI10 to TI17 input high-level width, low-level width	t_{TIH}, t_{TIL}				1/f_{MCK} + 10			ns Note
TO00 to TO07, TO10 to TO17 output frequency	f_{TO}	HS (high-speed main) mode LS (low-speed main) mode		4.0 V ≤ EV_{DD0} ≤ 5.5 V			16	MHz
				2.7 V ≤ EV_{DD0} < 4.0 V			8	MHz
				1.8 V ≤ EV_{DD0} < 2.7 V			4	MHz
				1.6 V ≤ EV_{DD0} < 1.8 V			2	MHz
		LP (low-power main) mode		1.6 V ≤ EV_{DD0} ≤ 5.5 V			2	MHz
PCLBUZ0, PCLBUZ1 output frequency	f_{PCL}	HS (high-speed main) mode LS (low-speed main) mode		4.0 V ≤ EV_{DD0} ≤ 5.5 V			16	MHz
				2.7 V ≤ EV_{DD0} < 4.0 V			8	MHz
				1.8 V ≤ EV_{DD0} < 2.7 V			4	MHz
				1.6 V ≤ EV_{DD0} < 1.8 V			2	MHz
		LP (low-power main) mode		1.6 V ≤ EV_{DD0} < 1.8 V			2	MHz
<R> Interrupt input high-level width, low-level width	t_{INTH}, t_{INTL}	INTP0		1.6 V ≤ V_{DD} ≤ 5.5 V	1			μs
		INTP1 to INTP11		1.6 V ≤ EV_{DD0} ≤ 5.5 V	1			μs
<R> Key interrupt input high-level width, low-level width	t_{KRH}, t_{KRL}	KR0 to KR7		1.8 V ≤ EV_{DD0} ≤ 5.5 V	250			ns
				1.6 V ≤ EV_{DD0} < 1.8 V	1			μs
$\overline{\text{RESET}}$ low-level width	t_{RSL}				10			μs

(Note and Remark are listed on the next page.)

Downloaded from Arrow.com.

Note The following conditions are required for low voltage interface when $EV_{DD0} < V_{DD}$.
1.8 V ≤ EV_{DD0} < 2.7 V: 125 ns min.
1.6 V ≤ EV_{DD0} < 1.8 V: 250 ns min.

Remark f_{MCK}: Timer array unit operating clock frequency
(To set this operating clock, use the CKSmn0 and CKSmn1 bits of the timer mode register mn (TMRmn) (m: Unit number (m = 0, 1), n: Channel number (n = 0 to 7).)

Downloaded from Arrow.com.

Minimum Instruction Execution Time during Main System Clock Operation

TCY vs VDD (HS (high-speed main) mode)

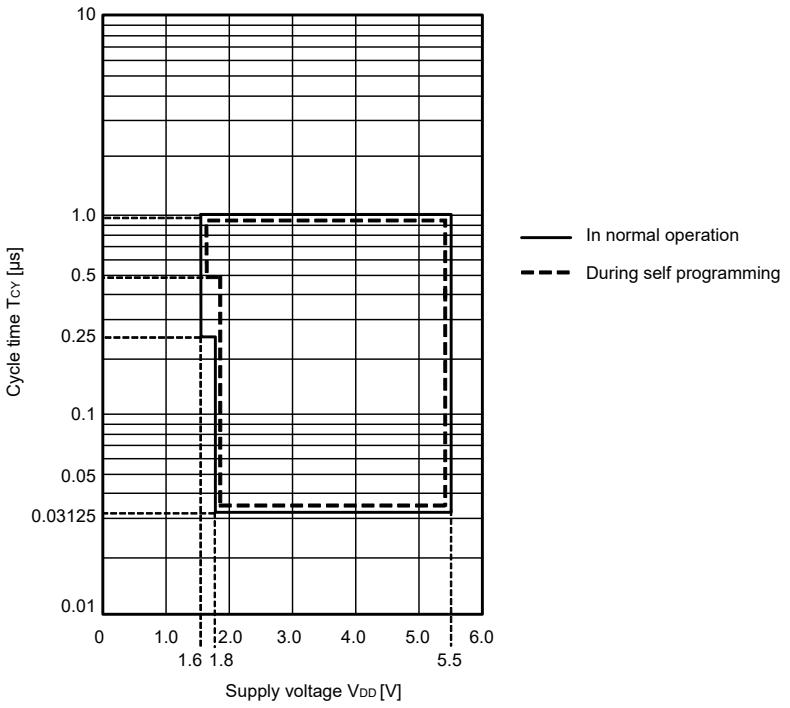

TCY vs VDD (LS (low-speed main) mode)

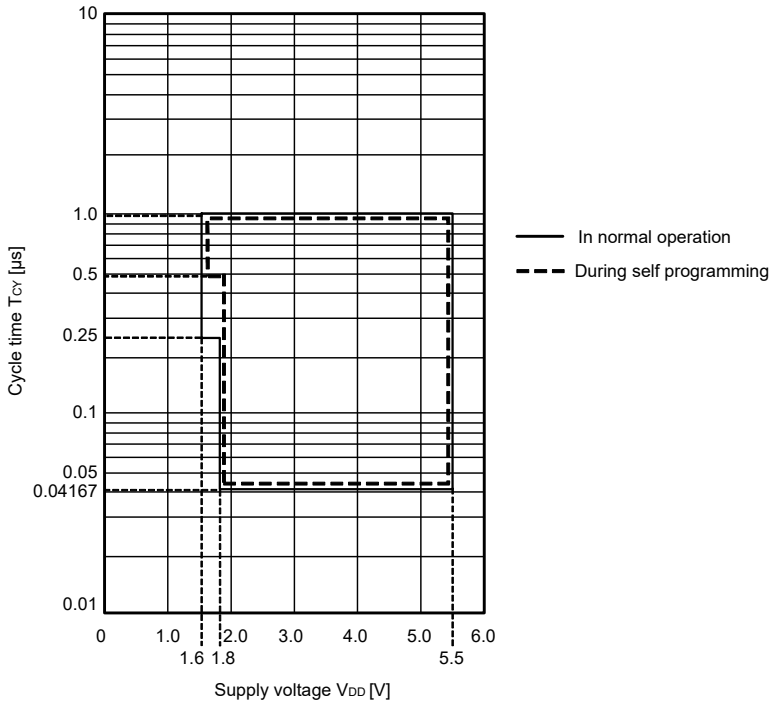

Downloaded from Arrow.com.

TCY vs VDD (LP (low-power main) mode)

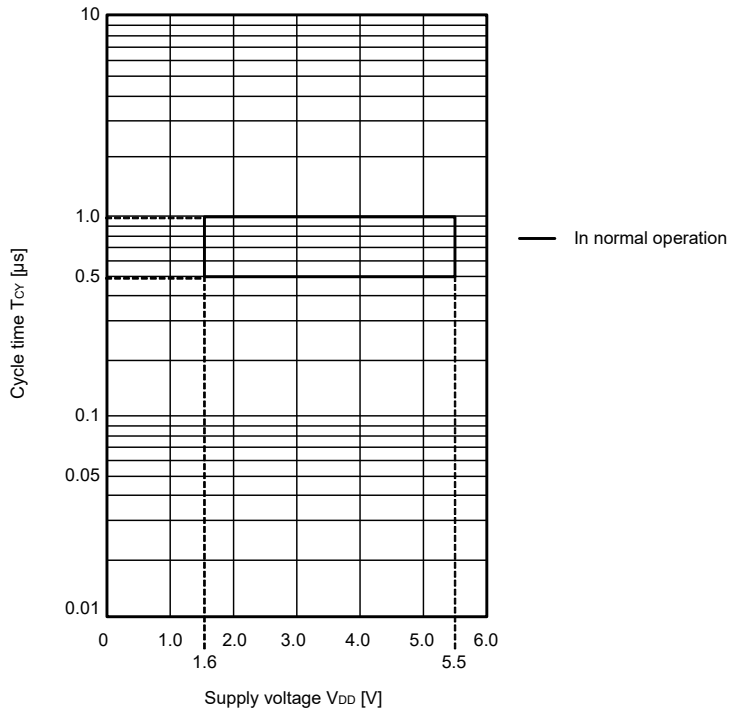

Downloaded from Arrow.com.

AC Timing Test Points

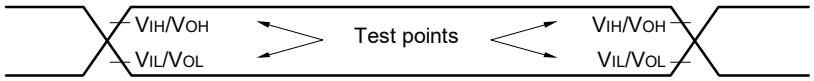

External System Clock Timing

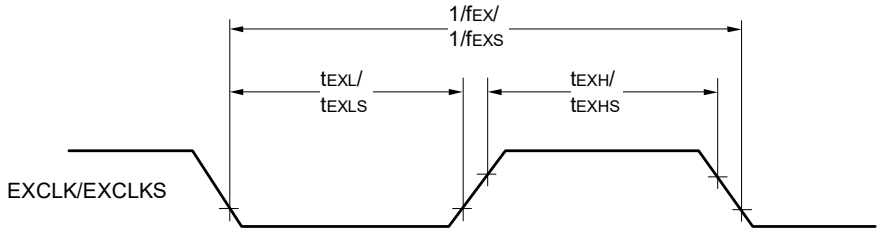

TI/TO Timing

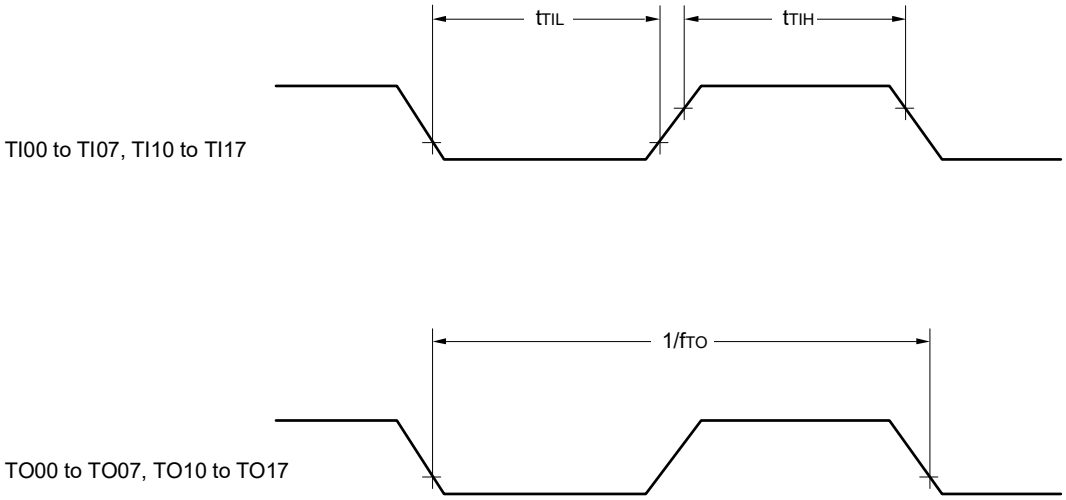

Downloaded from Arrow.com.

Interrupt Request Input Timing

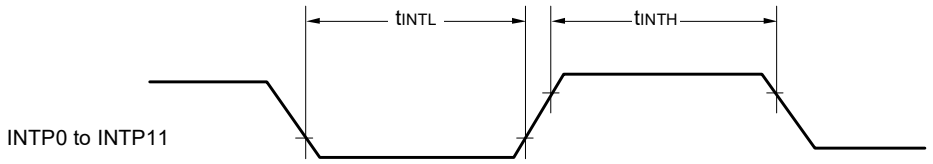

Key Interrupt Input Timing

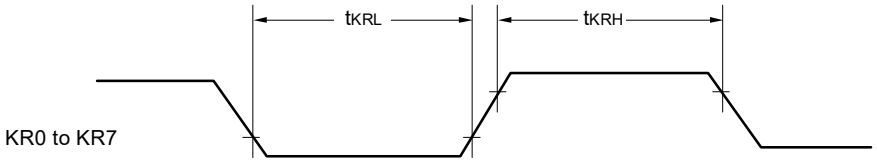

$\overline{\text{RESET}}$ Input Timing

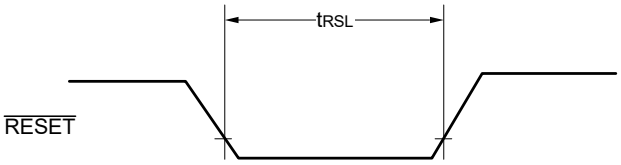

Downloaded from Arrow.com.

2.5 Characteristics of the Peripheral Functions

AC Timing Test Points

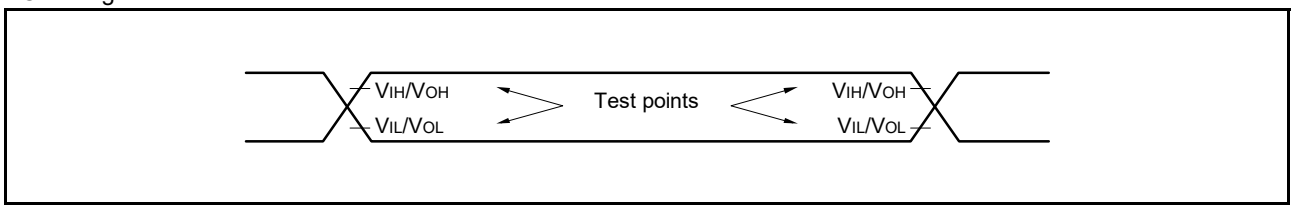

2.5.1 Serial array unit

1. In UART communications with devices operating at same voltage levels

(T_A = -40 to +105°C, 1.6 V ≤ EV_{DD0} = EV_{DD1} ≤ V_{DD} ≤ 5.5 V, V_{SS} = EV_{SS0} = EV_{SS1} = 0 V)

Item	Symbol	Conditions	HS (High-Speed Main) Mode		LS (Low-Speed Main) Mode		LP (Low-Power Main) Mode		Unit
			Min.	Max.	Min.	Max.	Min.	Max.	
Transfer rate **Note 1**		1.6 V ≤ EV_{DD0} ≤ 5.5 V		f_{MCK}/6 **Note 2**		f_{MCK}/6 **Note 2**		f_{MCK}/6	bps
		Theoretical value of the maximum transfer rate f_{MCK} = f_{CLK} **Note 3**		5.3		4		0.33	Mbps

Note 1. The transfer rate in the SNOOZE mode is within the range from 4800 to 9600 bps.

Note 2. The following conditions are required for low voltage interface when EV_{DD0} < V_{DD}.
2.4 V ≤ EV_{DD0} < 2.7 V: 2.6 Mbps max.
1.8 V ≤ EV_{DD0} < 2.4 V: 1.3 Mbps max.
1.6 V ≤ EV_{DD0} < 1.8 V: 0.6 Mbps max.

Note 3. The maximum operating frequencies of the CPU/peripheral hardware clock (f_{CLK}) are as follows.
HS (high-speed main) mode : 32 MHz (1.8 V ≤ V_{DD} ≤ 5.5 V)
4 MHz (1.6 V ≤ V_{DD} ≤ 5.5 V)
LS (low-speed main) mode : 24 MHz (1.8 V ≤ V_{DD} ≤ 5.5 V)
4 MHz (1.6 V ≤ V_{DD} ≤ 5.5 V)
LP (low-power main) mode : 2 MHz (1.6 V ≤ V_{DD} ≤ 5.5 V)

Caution **Select the normal input buffer for the RxDq pin and the normal output mode for the TxDq pin by using a port input mode register (PIMg) and port output mode register (POMg).**

Downloaded from Arrow.com.

Connection in the UART communications with devices operating at same voltage levels

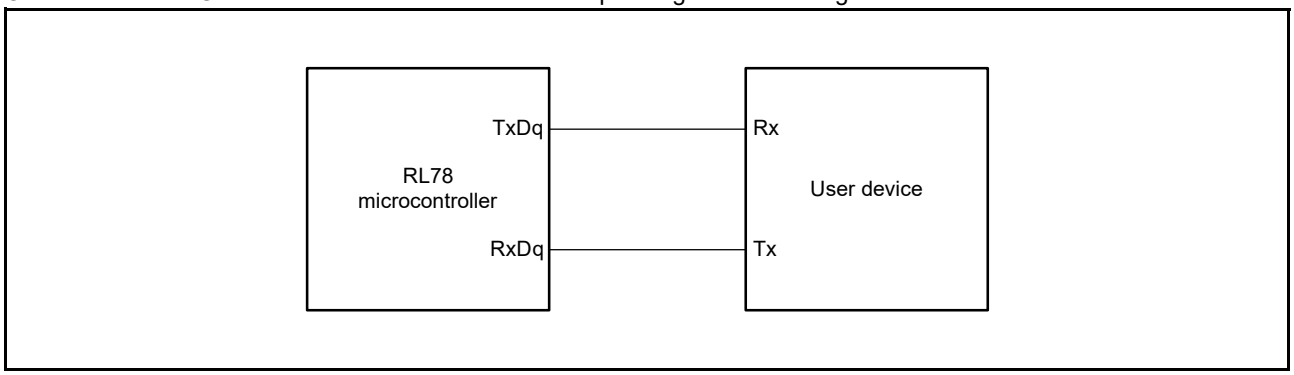

Bit width in the UART communications when interfacing devices operate at the same voltage level (reference)

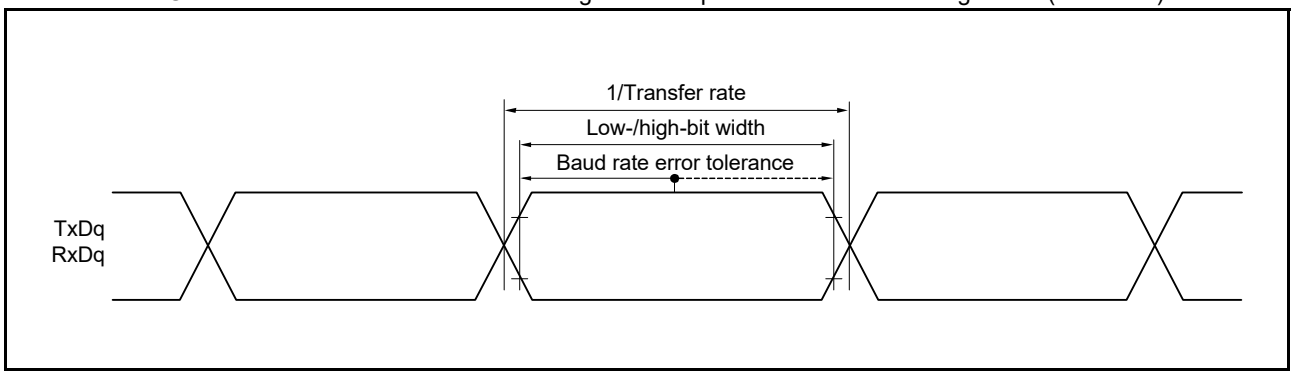

Remark 1. q: UART number (q = 0 to 3), g: PIM and POM number (g = 0, 1, 8, 14)

Remark 2. f_{MCK}: Serial array unit operation clock frequency
(To set this operating clock, set the CKSmn bit in the serial mode register mn (SMRmn) (m: Unit number, n: Channel number (mn = 00 to 03, 10 to 13).)

Downloaded from Arrow.com.

2. In simplified SPI (CSI) communications in the master mode with devices operating at same voltage levels with the internal SCKp clock (the ratings below are only applicable to CSI00)

(T_A = -40 to +85°C, 2.7 V ≤ EV_{DD0} = EV_{DD1} ≤ V_{DD} ≤ 5.5 V, V_{SS} = EV_{SS0} = EV_{SS1} = 0 V)

Item	Symbol	Conditions		HS (High-Speed Main) Mode		LS (Low-Speed Main) Mode		LP (Low-Power Main) Mode		Unit
				Min.	Max.	Min.	Max.	Min.	Max.	
SCKp cycle time	t_{KCY1}	t_{KCY1} ≥ 2/f_{CLK}	4.0 V ≤ EV_{DD0} ≤ 5.5 V	62.5		83.3		1000		ns
			2.7 V ≤ EV_{DD0} ≤ 5.5 V	83.3		125		1000		ns
SCKp high-level width, low-level width	t_{KH1}, t_{KL1}	4.0 V ≤ EV_{DD0} ≤ 5.5 V		t_{KCY1}/2 - 7		t_{KCY1}/2 - 10		t_{KCY1}/2 - 50		ns
		2.7 V ≤ EV_{DD0} ≤ 5.5 V		t_{KCY1}/2 - 10		t_{KCY1}/2 - 15		t_{KCY1}/2 - 50		ns
SIp setup time (to SCKp↑)**Note 1**	t_{SIK1}	4.0 V ≤ EV_{DD0} ≤ 5.5 V		23		33		110		ns
		2.7 V ≤ EV_{DD0} ≤ 5.5 V		33		50		110		ns
SIp hold time (from SCKp↑) **Note 1**	t_{KSI1}	2.7 V ≤ EV_{DD0} ≤ 5.5 V		10		10		10		ns
Delay time from SCKp↓ to SOp output**Note 2**	t_{KSO1}	C = 20 pF**Note 3**			10		10		10	ns

Note 1. The setting applies when DAPmn = 0 and CKPmn = 0, or DAPmn = 1 and CKPmn = 1. The setting for the SIp setup time becomes "to SCKp↓" and that for the SIp hold time becomes "from SCKp↓" when DAPmn = 0 and CKPmn = 1, or DAPmn = 1 and CKPmn = 0.

Note 2. This setting applies when DAPmn = 0 and CKPmn = 0, or DAPmn = 1 and CKPmn = 1. The setting for the delay time to SOp output becomes "from SCKp↑" when DAPmn = 0 and CKPmn = 1, or DAPmn = 1 and CKPmn = 0.

Note 3. C is the load capacitance of the SCKp and SOp output lines.

Caution **Select the normal input buffer for the SIp pin and the normal output mode for the SOp pin and SCKp pin by using a port input mode register (PIMg) and port output mode register (POMg).**

Remark 1. The listed times are only valid when the peripheral I/O redirect function of CSI00 is not in use.

Remark 2. p: CSI number (p = 00), m: Unit number (m = 0), n: Channel number (n = 0), g: PIM and POM numbers (g = 1)

Remark 3. f_{MCK}: Serial array unit operation clock frequency
(To set this operating clock, use the CKSmn bit in the serial mode register mn (SMRmn) (m: Unit number, n: Channel number (mn = 00).)

Downloaded from Arrow.com.

3. In simplified SPI (CSI) communications in the master mode with devices operating at same voltage levels with the internal SCKp clock

(T_A = -40 to +105°C, 1.6 V ≤ EV_{DD0} = EV_{DD1} ≤ V_{DD} ≤ 5.5 V, V_{SS} = EV_{SS0} = EV_{SS1} = 0 V)

Item	Symbol	Conditions		HS (High-Speed Main) Mode		LS (Low-Speed Main) Mode		LP (Low-Power Main) Mode		Unit
				Min.	Max.	Min.	Max.	Min.	Max.	
SCKp cycle time	t_{KCY1}	t_{KCY1} ≥ 4/f_{CLK}	2.7 V ≤ EV_{DD0} ≤ 5.5 V	125		166		2000		ns
			2.4 V ≤ EV_{DD0} ≤ 5.5 V	250		250		2000		ns
			1.8 V ≤ EV_{DD0} ≤ 5.5 V	500		500		2000		ns
			1.6 V ≤ EV_{DD0} ≤ 5.5 V	1000		1000		2000		ns
SCKp high-level width, low-level width	t_{KH1}, t_{KL1}	4.0 V ≤ EV_{DD0} ≤ 5.5 V		t_{KCY1}/2 - 12		t_{KCY1}/2 - 21		t_{KCY1}/2 - 50		ns
		2.7 V ≤ EV_{DD0} ≤ 5.5 V		t_{KCY1}/2 - 18		t_{KCY1}/2 - 25		t_{KCY1}/2 - 50		ns
		2.4 V ≤ EV_{DD0} ≤ 5.5 V		t_{KCY1}/2 - 38		t_{KCY1}/2 - 38		t_{KCY1}/2 - 50		ns
		1.8 V ≤ EV_{DD0} ≤ 5.5 V		t_{KCY1}/2 - 50		t_{KCY1}/2 - 50		t_{KCY1}/2 - 50		ns
		1.6 V ≤ EV_{DD0} ≤ 5.5 V		t_{KCY1}/2 - 100		t_{KCY1}/2 - 100		t_{KCY1}/2 - 100		ns
SIp setup time (to SCKp↑)Note 1	t_{SIK1}	4.0 V ≤ EV_{DD0} ≤ 5.5 V		44		54		110		ns
		2.7 V ≤ EV_{DD0} ≤ 5.5 V		44		54		110		ns
		2.4 V ≤ EV_{DD0} ≤ 5.5 V		75		75		110		ns
		1.8 V ≤ EV_{DD0} ≤ 5.5 V		110		110		110		ns
		1.6 V ≤ EV_{DD0} ≤ 5.5 V		220		220		220		ns
SIp hold time (from SCKp↑) Note 1	t_{KSI1}	1.6 V ≤ EV_{DD0} ≤ 5.5 V		19		19		19		ns
Delay time from SCKp↓ to SOp outputNote 2	t_{KSO1}	1.6 V ≤ EV_{DD0} ≤ 5.5 V C = 30 pFNote 3			25		25		25	ns

Note 1. This setting applies when DAPmn = 0 and CKPmn = 0, or DAPmn = 1 and CKPmn = 1. The setting for the SIp setup time becomes "to SCKp↓" and that for the SIp hold time becomes "from SCKp↓" when DAPmn = 0 and CKPmn = 1, or DAPmn = 1 and CKPmn = 0.

Note 2. This setting applies when DAPmn = 0 and CKPmn = 0, or DAPmn = 1 and CKPmn = 1. The setting for the delay time to SOp output becomes "from SCKp↑" when DAPmn = 0 and CKPmn = 1, or DAPmn = 1 and CKPmn = 0.

Note 3. C is the load capacitance of the SCKp and SOp output lines.

Caution **Select the normal input buffer for the SIp pin and the normal output mode for the SOp pin and SCKp pin by using a port input mode register (PIMg) and port output mode register (POMg).**

Remark 1. p: CSI number (p = 00, 01, 10, 11, 20, 21, 30, 31), m: Unit number (m = 0, 1), n: Channel number (n = 0 to 3), g: PIM and POM numbers (g = 0, 1, 4, 5, 8, 14)

Remark 2. f_{MCK}: Serial array unit operation clock frequency
(To set this operating clock, use the CKSmn bit in the serial mode register mn (SMRmn) (m: Unit number, n: Channel number = 00 to 03, 10 to 13).)

Downloaded from Arrow.com.

4. In simplified SPI (CSI) communications in the slave mode with devices operating at same voltage levels with the SCKp external clock

(T_A = -40 to +105°C, 1.6 V ≤ EV_{DD0} = EV_{DD1} ≤ V_{DD} ≤ 5.5 V, V_{SS} = EV_{SS0} = EV_{SS1} = 0 V) (1/2)

Item	Symbol	Conditions		HS (High-Speed Main) Mode		LS (Low-Speed Main) Mode		LP (Low-Power Main) Mode		Unit
				Min.	Max.	Min.	Max.	Min.	Max.	
SCKp cycle time **Note 1**	t_{KCY2}	4.0 V ≤ EV_{DD0} ≤ 5.5 V	20 MHz < f_{MCK}	8/f_{MCK}		8/f_{MCK}		—		ns
			f_{MCK} ≤ 20 MHz	6/f_{MCK}		6/f_{MCK}		6/f_{MCK}		ns
		2.7 V ≤ EV_{DD0} ≤ 5.5 V	16 MHz < f_{MCK}	8/f_{MCK}		8/f_{MCK}		—		ns
			f_{MCK} ≤ 16 MHz	6/f_{MCK}		6/f_{MCK}		6/f_{MCK}		ns
		2.4 V ≤ EV_{DD0} ≤ 5.5 V		6/f_{MCK} and 500		6/f_{MCK} and 500		6/f_{MCK} and 500		ns
		1.8 V ≤ EV_{DD0} ≤ 5.5 V		6/f_{MCK} and 750		6/f_{MCK} and 750		6/f_{MCK} and 750		ns
		1.6 V ≤ EV_{DD0} ≤ 5.5 V		6/f_{MCK} and 1500		6/f_{MCK} and 1500		6/f_{MCK} and 1500		ns
SCKp high-level width, low-level width	t_{KH2}, t_{KL2}	4.0 V ≤ EV_{DD0} ≤ 5.5 V		t_{KCY2}/2 - 7		t_{KCY2}/2 - 7		t_{KCY2}/2 - 7		ns
		2.7 V ≤ EV_{DD0} ≤ 5.5 V		t_{KCY2}/2 - 8		t_{KCY2}/2 - 8		t_{KCY2}/2 - 8		ns
		1.8 V ≤ EV_{DD0} ≤ 5.5 V		t_{KCY2}/2 - 18		t_{KCY2}/2 - 18		t_{KCY2}/2 - 18		ns
		1.6 V ≤ EV_{DD0} ≤ 5.5 V		t_{KCY2}/2 - 66		t_{KCY2}/2 - 66		t_{KCY2}/2 - 66		ns

(Notes, Caution, and Remarks are listed on the next page.)

Downloaded from Arrow.com.

4. In simplified SPI (CSI) communications in the slave mode with devices operating at same voltage levels with the SCKp external clock

(T_A = -40 to +105°C, 1.6 V ≤ EV_{DD0} = EV_{DD1} ≤ V_{DD} ≤ 5.5 V, V_{SS} = EV_{SS0} = EV_{SS1} = 0 V) (2/2)

Item	Symbol	Conditions		HS (High-Speed Main) Mode		LS (Low-Speed Main) Mode		LP (Low-Power Main) Mode		Unit
				Min.	Max.	Min.	Max.	Min.	Max.	
SIp setup time (to SCKp↑)**Note 2**	t_{SIK2}	2.7 V ≤ EV_{DD0} ≤ 5.5 V		1/f_{MCK} + 20		1/f_{MCK} + 30		1/f_{MCK} + 30		ns
		1.8 V ≤ EV_{DD0} ≤ 5.5 V		1/f_{MCK} + 30		1/f_{MCK} + 30		1/f_{MCK} + 30		ns
		1.6 V ≤ EV_{DD0} ≤ 5.5 V		1/f_{MCK} + 40		1/f_{MCK} + 40		1/f_{MCK} + 40		ns
SIp hold time (from SCKp↑)**Note 2**	t_{KSI2}	1.8 V ≤ EV_{DD0} ≤ 5.5 V		1/f_{MCK} + 31		1/f_{MCK} + 31		1/f_{MCK} + 31		ns
		1.6 V ≤ EV_{DD0} ≤ 5.5 V		1/f_{MCK} + 250		1/f_{MCK} + 250		1/f_{MCK} + 250		ns
Delay time from SCKp↓ to SOp output **Note 3**	t_{KSO2}	C = 30 pF **Note 4**	2.7 V ≤ EV_{DD0} ≤ 5.5 V		2/f_{MCK} + 44		2/f_{MCK} + 110		2/f_{MCK} + 110	ns
			2.4 V ≤ EV_{DD0} ≤ 5.5 V		2/f_{MCK} + 75		2/f_{MCK} + 110		2/f_{MCK} + 110	ns
			1.8 V ≤ EV_{DD0} ≤ 5.5 V		2/f_{MCK} + 110		2/f_{MCK} + 110		2/f_{MCK} + 110	ns
			1.6 V ≤ EV_{DD0} ≤ 5.5 V		2/f_{MCK} + 220		2/f_{MCK} + 220		2/f_{MCK} + 220	ns

Note 1. Transfer rate in the SNOOZE mode is 1 Mbps at the maximum.

Note 2. This setting applies when DAPmn = 0 and CKPmn = 0, or DAPmn = 1 and CKPmn = 1. The setting for the SIp setup time becomes "to SCKp↓" and that for the SIp hold time becomes "from SCKp↓" when DAPmn = 0 and CKPmn = 1, or DAPmn = 1 and CKPmn = 0.

Note 3. This setting applies when DAPmn = 0 and CKPmn = 0, or DAPmn = 1 and CKPmn = 1. The setting for the delay time to SOp output becomes "from SCKp↑" when DAPmn = 0 and CKPmn = 1, or DAPmn = 1 and CKPmn = 0.

Note 4. C is the load capacitance of the SOp output line.

Caution **Select the normal input buffer for the SIp pin and SCKp pin and the normal output mode for the SOp pin by using a port input mode register (PIMg) and port output mode register (POMg).**

Remark 1. p: CSI number (p = 00, 01, 10, 11, 20, 21, 30, 31), m: Unit number (m = 0, 1), n: Channel number (n = 0 to 3), g: PIM and POM numbers (g = 0, 1, 4, 5, 8, 14)

Remark 2. f_{MCK}: Serial array unit operation clock frequency
(To set this operating clock, use the CKSmn bit in the serial mode register mn (SMRmn) (m: Unit number, n: Channel number = 00 to 03, 10 to 13).)

Downloaded from Arrow.com.

Connection in the simplified SPI (CSI) communications with devices operating at same voltage levels

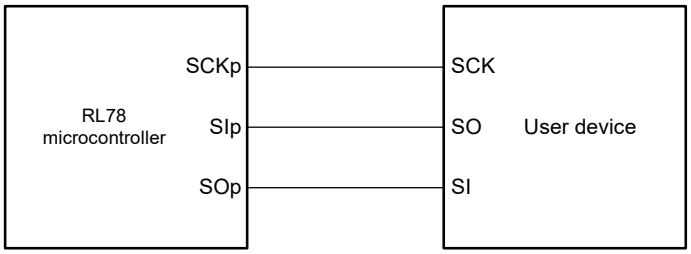

Timing of serial transfer in the simplified SPI (CSI) communications with devices operating at same voltage levels when DAPmn = 0 and CKPmn = 0, or DAPmn = 1 and CKPmn = 1

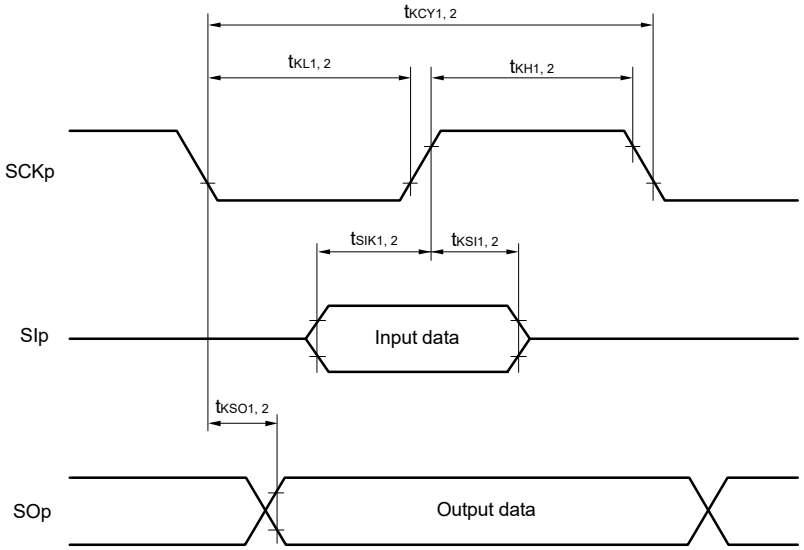

Downloaded from Arrow.com.

Timing of serial transfer in the simplified SPI (CSI) communications with devices operating at same voltage levels when DAPmn = 0 and CKPmn = 1, or DAPmn = 1 and CKPmn = 0

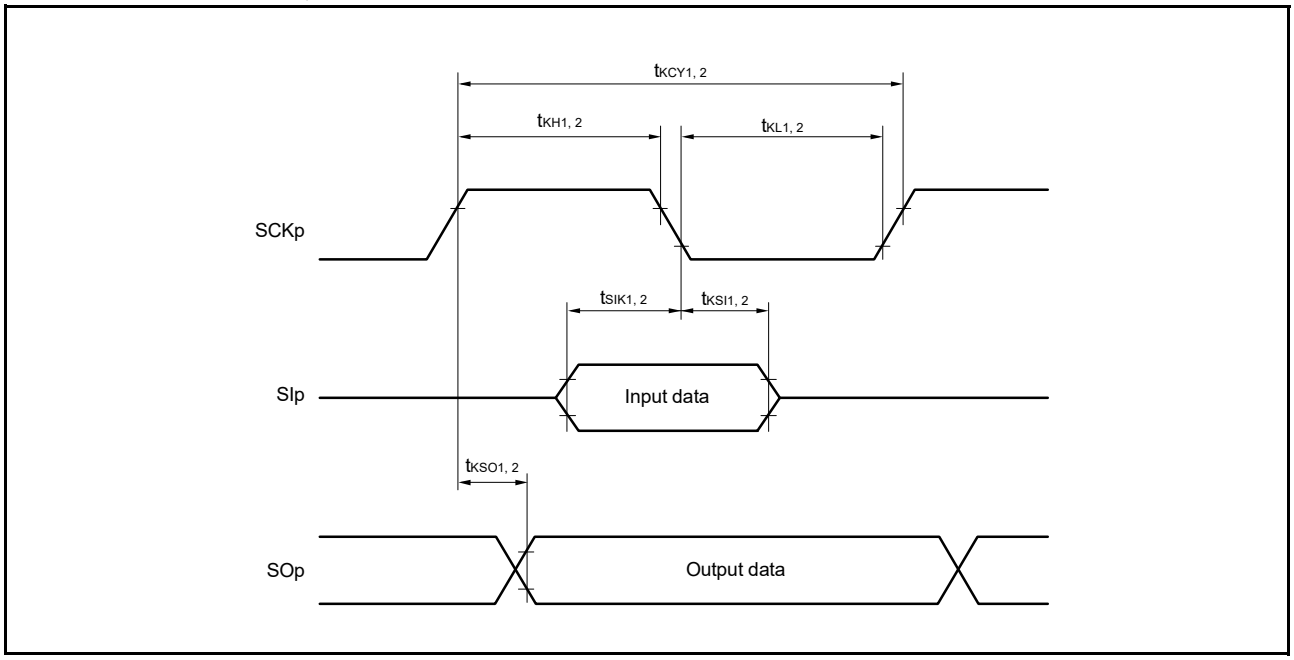

Remark 1. p: CSI number (p = 00, 01, 10, 11, 20, 21, 30, 31)

Remark 2. m: Unit number, n: Channel number (mn = 00 to 03, 10 to 13)

Downloaded from Arrow.com.

5. In simplified I²C communications with devices operating at same voltage levels

(T_A = -40 to +105°C, 1.6 V ≤ EV_{DD0} = EV_{DD1} ≤ V_{DD} ≤ 5.5 V, V_{SS} = EV_{SS0} = EV_{SS1} = 0 V) (1/2)

Item	Symbol	Conditions	HS (High-Speed Main) Mode		LS (Low-Speed Main) Mode		LP (Low-Power Main) Mode		Unit
			Min.	Max.	Min.	Max.	Min.	Max.	
SCLr clock frequency	f_{SCL}	2.7 V ≤ EV_{DD0} ≤ 5.5 V, C_b = 50 pF, R_b = 2.7 kΩ		1000 Note 1		1000 Note 1		400 Note 1	kHz
		1.8 V ≤ EV_{DD0} ≤ 5.5 V, C_b = 100 pF, R_b = 3 kΩ		400 Note 1		400 Note 1		400 Note 1	kHz
		1.8 V ≤ EV_{DD0} < 2.7 V, C_b = 100 pF, R_b = 5 kΩ		300 Note 1		300 Note 1		300 Note 1	kHz
		1.6 V ≤ EV_{DD0} < 1.8 V, C_b = 100 pF, R_b = 5 kΩ		250 Note 1		250 Note 1		250 Note 1	kHz
Hold time when SCLr is low	t_{LOW}	2.7 V ≤ EV_{DD0} ≤ 5.5 V, C_b = 50 pF, R_b = 2.7 kΩ	475		475		1150		ns
		1.8 V ≤ EV_{DD0} ≤ 5.5 V, C_b = 100 pF, R_b = 3 kΩ	1150		1150		1150		ns
		1.8 V ≤ EV_{DD0} < 2.7 V, C_b = 100 pF, R_b = 5 kΩ	1550		1550		1550		ns
		1.6 V ≤ EV_{DD0} < 1.8 V, C_b = 100 pF, R_b = 5 kΩ	1850		1850		1850		ns
Hold time when SCLr is high	t_{HIGH}	2.7 V ≤ EV_{DD0} ≤ 5.5 V, C_b = 50 pF, R_b = 2.7 kΩ	475		475		1150		ns
		1.8 V ≤ EV_{DD0} ≤ 5.5 V, C_b = 100 pF, R_b = 3 kΩ	1150		1150		1150		ns
		1.8 V ≤ EV_{DD0} < 2.7 V, C_b = 100 pF, R_b = 5 kΩ	1550		1550		1550		ns
		1.6 V ≤ EV_{DD0} < 1.8 V, C_b = 100 pF, R_b = 5 kΩ	1850		1850		1850		ns

(Notes and Caution are listed on the next page, and Remarks are listed on page 120.)

Downloaded from Arrow.com.

5. In simplified I²C communications with devices operating at same voltage levels

(T_A = -40 to +105°C, 1.6 V ≤ EV_{DD0} = EV_{DD1} ≤ V_{DD} ≤ 5.5 V, V_{SS} = EV_{SS0} = EV_{SS1} = 0 V) (2/2)

Item	Symbol	Conditions	HS (High-Speed Main) Mode		LS (Low-Speed Main) Mode		LP (Low-Power Main) Mode		Unit
			Min.	Max.	Min.	Max.	Min.	Max.	
Data setup time (reception)	$t_{SU:DAT}$	2.7 V ≤ EV_{DD0} ≤ 5.5 V, C_b = 50 pF, R_b = 2.7 kΩ	$1/f_{MCK}$ + 85 **Note 2**		$1/f_{MCK}$ + 85 **Note 2**		$1/f_{MCK}$ + 145 **Note 2**		ns
		1.8 V ≤ EV_{DD0} ≤ 5.5 V, C_b = 100 pF, R_b = 3 kΩ	$1/f_{MCK}$ + 145 **Note 2**		$1/f_{MCK}$ + 145 **Note 2**		$1/f_{MCK}$ + 145 **Note 2**		ns
		1.8 V ≤ EV_{DD0} < 2.7 V, C_b = 100 pF, R_b = 5 kΩ	$1/f_{MCK}$ + 230 **Note 2**		$1/f_{MCK}$ + 230 **Note 2**		$1/f_{MCK}$ + 230 **Note 2**		ns
		1.6 V ≤ EV_{DD0} < 1.8 V, C_b = 100 pF, R_b = 5 kΩ	$1/f_{MCK}$ + 290 **Note 2**		$1/f_{MCK}$ + 290 **Note 2**		$1/f_{MCK}$ + 290 **Note 2**		ns
Data hold time (transmission)	$t_{HD:DAT}$	2.7 V ≤ EV_{DD0} ≤ 5.5 V, C_b = 50 pF, R_b = 2.7 kΩ	0	305	0	305	0	305	ns
		1.8 V ≤ EV_{DD0} ≤ 5.5 V, C_b = 100 pF, R_b = 3 kΩ	0	355	0	355	0	355	ns
		1.8 V ≤ EV_{DD0} < 2.7 V, C_b = 100 pF, R_b = 5 kΩ	0	405	0	405	0	405	ns
		1.6 V ≤ EV_{DD0} < 1.8 V, C_b = 100 pF, R_b = 5 kΩ	0	405	0	405	0	405	ns

Note 1. The listed times must be no greater than $f_{MCK}/4$.

Note 2. Set f_{MCK} so that it will not exceed the hold time when SCLr is low or high.

Caution **Select the normal input buffer and the N-ch open drain output (withstand voltage of V_{DD} (when 30- to 52-pin products)/withstand voltage of EV_{DD} (when 64- to 128-pin products)) mode for the SDAr pin and the normal output mode for the SCLr pin by using a port input mode register (PIMg) and port output mode register (POMh).**

(Remarks are listed on the next page.)

Downloaded from Arrow.com.

Connection in the simplified I2C communications with devices operating at same voltage levels

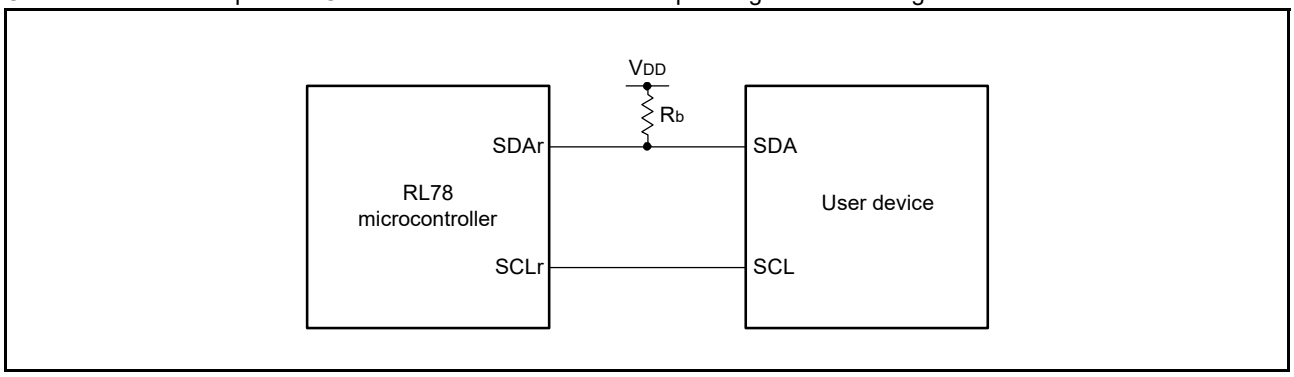

Timing of serial transfer in the simplified I2C communications with devices operating at same voltage levels

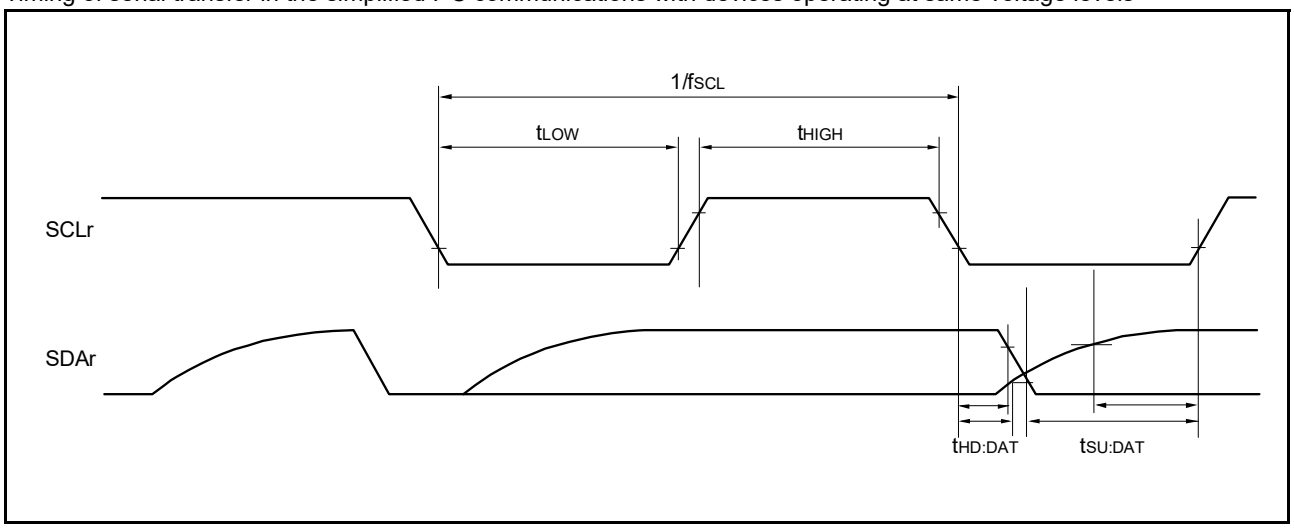

Remark 1. R_b[Ω]: Communication line (SDAr) pull-up resistance, C_b[F]: Communication line (SDAr, SCLr) load capacitance

Remark 2. r: IIC number (r = 00, 01, 10, 11, 20, 21, 30, 31), g: PIM number (g = 0, 1, 4, 5, 8, 14), h: POM number (g = 0, 1, 4, 5, 7 to 9, 14)

Remark 3. f_{MCK}: Serial array unit operation clock frequency
(To set this operating clock, use the CKSmn bit in the serial mode register mn (SMRmn) (m: Unit number, n: Channel number = 00 to 03, 10 to 13).)

Downloaded from Arrow.com.

6. In UART communications with devices operating at different voltage levels (1.8 V, 2.5 V, 3 V)

(T_A = -40 to +105°C, 1.8 V ≤ EV_{DD0} = EV_{DD1} ≤ V_{DD} ≤ 5.5 V, V_{SS} = EV_{SS0} = EV_{SS1} = 0 V) (1/2)

Item	Symbol	Conditions		HS (High-Speed Main) Mode		LS (Low-Speed Main) Mode		LP (Low-Power Main) Mode		Unit
				Min.	Max.	Min.	Max.	Min.	Max.	
Transfer rate		Reception	4.0 V ≤ EV_{DD0} ≤ 5.5 V, 2.7 V ≤ V_b ≤ 4.0 V		f_{MCK}/6 **Note 1**		f_{MCK}/6 **Note 1**		f_{MCK}/6 **Note 1**	bps
			Theoretical value of the maximum transfer rate f_{MCK} = f_{CLK} **Note 2**		5.3		4		0.33	Mbps
			2.7 V ≤ EV_{DD0} < 4.0 V, 2.3 V ≤ V_b ≤ 2.7 V		f_{MCK}/6 **Note 1**		f_{MCK}/6 **Note 1**		f_{MCK}/6 **Note 1**	bps
			Theoretical value of the maximum transfer rate f_{MCK} = f_{CLK} **Note 2**		5.3		4		0.33	Mbps
			1.8 V ≤ EV_{DD0} < 3.3 V, 1.6 V ≤ V_b ≤ 2.0 V		f_{MCK}/6 **Notes 1, 3, 4**		f_{MCK}/6 **Notes 1, 3**		f_{MCK}/6 **Notes 1, 3**	bps
			Theoretical value of the maximum transfer rate f_{MCK} = f_{CLK} **Note 2**		5.3		4		0.33	Mbps

Note 1. Transfer rate in the SNOOZE mode is within the range from 4800 to 9600 bps.

Note 2. The maximum operating frequencies of the CPU/peripheral hardware clock (f_{CLK}) are:

HS (high-speed main) mode : 32 MHz (1.8 V ≤ V_{DD} ≤ 5.5 V)
4 MHz (1.6 V ≤ V_{DD} ≤ 5.5 V)
LS (low-speed main) mode : 24 MHz (1.8 V ≤ V_{DD} ≤ 5.5 V)
4 MHz (1.6 V ≤ V_{DD} ≤ 5.5 V)
LP (low-power main) mode : 2 MHz (1.6 V ≤ V_{DD} ≤ 5.5 V)

Note 3. Use this rate with EV_{DD0} ≥ V_b.

Note 4. The following conditions are required for low voltage interface when EV_{DD0} < V_{DD}.
2.4 V ≤ EV_{DD0} < 2.7 V: 2.6 Mbps (max.)
1.8 V ≤ EV_{DD0} < 2.4 V: 1.3 Mbps (max.)

Caution **Select the TTL input buffer for the RxDq pin and the N-ch open drain output (withstand voltage of V_{DD} (when 30- to 52-pin products)/withstand voltage of EV_{DD} (when 64- to 128-pin products)) mode for the TxDq pin by using a port input mode register (PIMg) and port output mode register (POMg). For V_{IH} and V_{IL}, see the DC characteristics with TTL input buffer selected.**

Remark 1. V_b[V]: Communication line voltage

Remark 2. q: UART number (q = 0 to 3), g: PIM and POM number (g = 0, 1, 8, 14)

Remark 3. f_{MCK}: Serial array unit operation clock frequency
(To set this operating clock, use the CKSmn bit in the serial mode register mn (SMRmn) (m: Unit number, n: Channel number = 00 to 03, 10 to 13).)

Remark 4. Communications by using UART2 with devices operating at different voltage levels are not possible when the setting of the PIOR1 bit of the peripheral I/O redirection register (PIOR) is 1.

Downloaded from Arrow.com.

6. In UART communications with devices operating at different voltage levels (1.8 V, 2.5 V, 3 V)

(T_A = -40 to +105°C, 1.8 V ≤ EV_{DD0} = EV_{DD1} ≤ V_{DD} ≤ 5.5 V, V_{SS} = EV_{SS0} = EV_{SS1} = 0 V) (2/2)

Item	Symbol	Conditions		HS (High-Speed Main) Mode		LS (Low-Speed Main) Mode		LP (Low-Power Main) Mode		Unit
				Min.	Max.	Min.	Max.	Min.	Max.	
Transfer rate		Transmission	4.0 V ≤ EV_{DD0} ≤ 5.5 V, 2.7 V ≤ V_b ≤ 4.0 V		**Note 1**		**Note 1**		**Note 1**	bps
			Theoretical value of the maximum transfer rate C_b = 50 pF, R_b = 1.4 kΩ, V_b = 2.7 V		2.8 **Note 2**		2.8 **Note 2**		2.8 **Note 2**	Mbps
			2.7 V ≤ EV_{DD0} < 4.0 V, 2.3 V ≤ V_b ≤ 2.7 V		**Note 3**		**Note 3**		**Note 3**	bps
			Theoretical value of the maximum transfer rate C_b = 50 pF, R_b = 2.7 kΩ, V_b = 2.3 V		1.2 **Note 4**		1.2 **Note 4**		1.2 **Note 4**	Mbps
			1.8 V ≤ EV_{DD0} < 3.3 V, 1.6 V ≤ V_b ≤ 2.0 V		**Notes 5, 6**		**Notes 5, 6**		**Notes 5, 6**	bps
			Theoretical value of the maximum transfer rate C_b = 50 pF, R_b = 5.5 kΩ, V_b = 1.6 V		0.43 **Note 7**		0.43 **Note 7**		0.43 **Note 7**	Mbps

Note 1. The smaller maximum transfer rate derived by using $f_{MCK}/6$ or the following expression is the valid maximum transfer rate.
Expression for calculating the transfer rate when 4.0 V ≤ EV_{DD0} ≤ 5.5 V, 2.7 V ≤ V_b ≤ 4.0 V

$$\text{Maximum transfer rate} = \frac{1}{\{-C_b \times R_b \times \ln(1 - \frac{2.2}{V_b})\} \times 3} \text{ [bps]}$$

$$\text{Baud rate error (theoretical value)} = \frac{\frac{1}{\text{Transfer rate} \times 2} - \{-C_b \times R_b \times \ln(1 - \frac{2.2}{V_b})\}}{(\frac{1}{\text{Transfer rate}}) \times \text{Number of transferred bits}} \times 100 \text{ [\%]}$$

* This value is the theoretical value of the relative difference between the transmission and reception sides.

Note 2. This rate is calculated as an example when the conditions described in the "Conditions" column are met. See **Note 1** above to calculate the maximum transfer rate under conditions of the customer.

(Notes and Caution continue in the next page.)

Downloaded from Arrow.com.

Note 3. The smaller maximum transfer rate derived by using $f_{MCK}/6$ or the following expression is the valid maximum transfer rate.
Expression for calculating the transfer rate when 2.7 V ≤ EV_{DD0} < 4.0 V, 2.3 V ≤ V_b ≤ 2.7 V

$$\text{Maximum transfer rate} = \frac{1}{\{-C_b \times R_b \times \ln(1 - \frac{2.0}{V_b})\} \times 3} \text{ [bps]}$$

$$\text{Baud rate error (theoretical value)} = \frac{\frac{1}{\text{Transfer rate} \times 2} - \{-C_b \times R_b \times \ln(1 - \frac{2.0}{V_b})\}}{(\frac{1}{\text{Transfer rate}}) \times \text{Number of transferred bits}} \times 100 \text{ [\%]}$$

* This value is the theoretical value of the relative difference between the transmission and reception sides.

Note 4. This rate is calculated as an example when the conditions described in the “Conditions” column are met. See **Note 3** above to calculate the maximum transfer rate under conditions of the customer.

Note 5. Use this rate with EV_{DD0} ≥ V_b.

Note 6. The smaller maximum transfer rate derived by using $f_{MCK}/6$ or the following expression is the valid maximum transfer rate.
Expression for calculating the transfer rate when 1.8 V ≤ EV_{DD0} < 3.3 V, 1.6 V ≤ V_b ≤ 2.0 V

$$\text{Maximum transfer rate} = \frac{1}{\{-C_b \times R_b \times \ln(1 - \frac{1.5}{V_b})\} \times 3} \text{ [bps]}$$

$$\text{Baud rate error (theoretical value)} = \frac{\frac{1}{\text{Transfer rate} \times 2} - \{-C_b \times R_b \times \ln(1 - \frac{1.5}{V_b})\}}{(\frac{1}{\text{Transfer rate}}) \times \text{Number of transferred bits}} \times 100 \text{ [\%]}$$

* This value is the theoretical value of the relative difference between the transmission and reception sides.

Note 7. This rate is calculated as an example when the conditions described in the “Conditions” column are met. Refer to **Note 6** above to calculate the maximum transfer rate under conditions of the customer.

Caution **Select the TTL input buffer for the RxDq pin and the N-ch open drain output (withstand voltage of V_{DD} (when 30- to 52-pin products)/withstand voltage of EV_{DD} (when 64- to 128-pin products)) mode for the TxDq pin by using a port input mode register (PIMg) and port output mode register (POMg). For V_{IH} and V_{IL}, see the DC characteristics with TTL input buffer selected.**

Downloaded from Arrow.com.

In UART communications with devices operating at different voltage levels

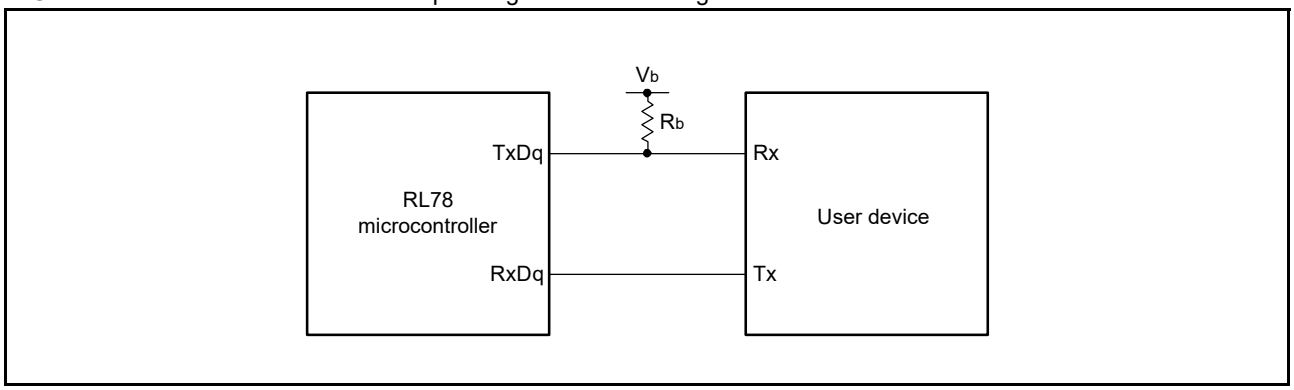

Bit width in the UART communications with devices operating at different voltage levels (reference)

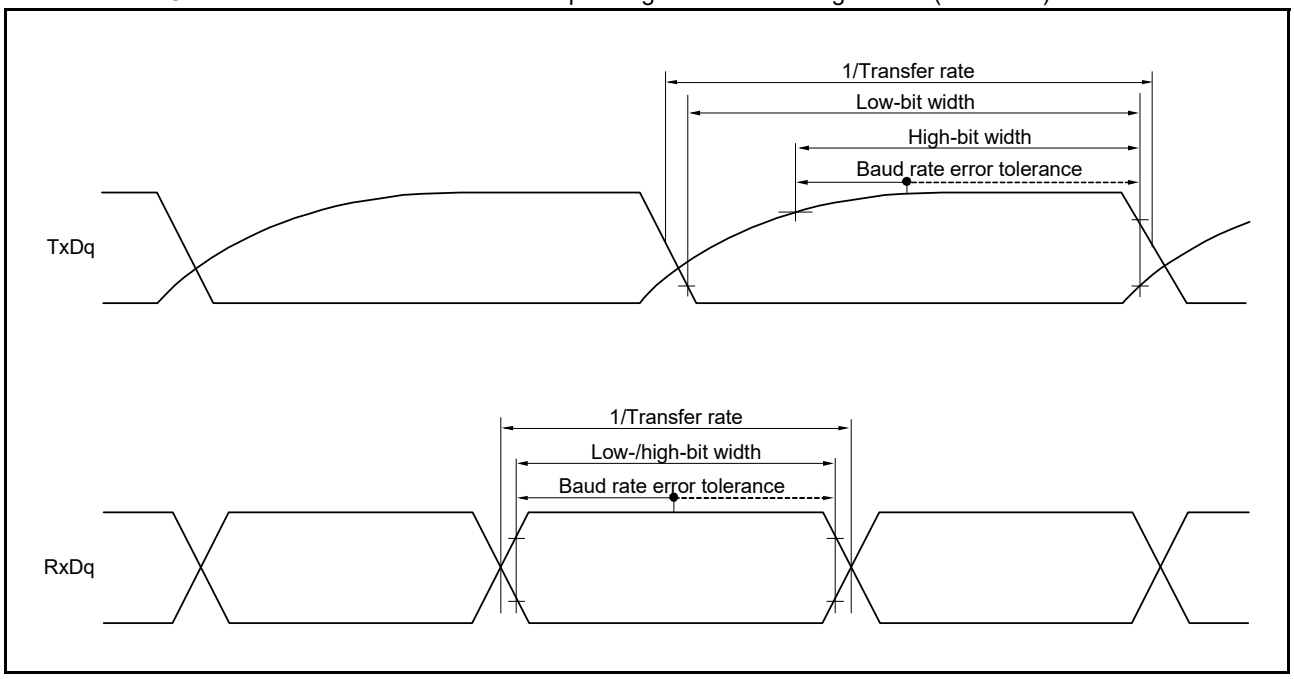

Remark 1. R_b[Ω]: Communication line (TxDq) pull-up resistance, C_b[F]: Communication line (TxDq) load capacitance, V_b[V]: Communication line voltage

Remark 2. q: UART number (q = 0 to 3), g: PIM and POM number (g = 0, 1, 8, 14)

Remark 3. f_{MCK}: Serial array unit operation clock frequency
(To set this operating clock, use the CKSmn bit in the serial mode register mn (SMRmn) (m: Unit number, n: Channel number = 00 to 03, 10 to 13).)

Remark 4. Communications by using UART2 with devices operating at different voltage levels are not possible when the setting of the PIOR1 bit of the peripheral I/O redirection register (PIOR) is 1.

Downloaded from Arrow.com.

7. In simplified SPI (CSI) communications in the master mode with devices operating at different voltage levels (2.5 V or 3 V) with the internal SCKp clock (the ratings below are only applicable to CSI00)

(T_A = -40 to +105°C, 2.7 V ≤ EV_{DD0} = EV_{DD1} ≤ V_{DD} ≤ 5.5 V, V_{SS} = EV_{SS0} = EV_{SS1} = 0 V) (1/2)

Item	Symbol	Conditions		HS (High-Speed Main) Mode		LS (Low-Speed Main) Mode		LP (Low-Power Main) Mode		Unit
				Min.	Max.	Min.	Max.	Min.	Max.	
SCKp cycle time	t_{KCY1}	t_{KCY1} ≥ 2/f_{CLK}	4.0 V ≤ EV_{DD0} ≤ 5.5 V, 2.7 V ≤ V_b ≤ 4.0 V, C_b = 20 pF, R_b = 1.4 kΩ	200		200		2300		ns
			2.7 V ≤ EV_{DD0} < 4.0 V, 2.3 V ≤ V_b ≤ 2.7 V, C_b = 20 pF, R_b = 2.7 kΩ	300		300		2300		ns
SCKp high-level width	t_{KH1}	4.0 V ≤ EV_{DD0} ≤ 5.5 V, 2.7 V ≤ V_b ≤ 4.0 V, C_b = 20 pF, R_b = 1.4 kΩ		t_{KCY1}/2 - 50		t_{KCY1}/2 - 50		t_{KCY1}/2 - 50		ns
		2.7 V ≤ EV_{DD0} < 4.0 V, 2.3 V ≤ V_b ≤ 2.7 V, C_b = 20 pF, R_b = 2.7 kΩ		t_{KCY1}/2 - 120		t_{KCY1}/2 - 120		t_{KCY1}/2 - 120		ns
SCKp low-level width	t_{KL1}	4.0 V ≤ EV_{DD0} ≤ 5.5 V, 2.7 V ≤ V_b ≤ 4.0 V, C_b = 20 pF, R_b = 1.4 kΩ		t_{KCY1}/2 - 7		t_{KCY1}/2 - 7		t_{KCY1}/2 - 50		ns
		2.7 V ≤ EV_{DD0} < 4.0 V, 2.3 V ≤ V_b ≤ 2.7 V, C_b = 20 pF, R_b = 2.7 kΩ		t_{KCY1}/2 - 10		t_{KCY1}/2 - 10		t_{KCY1}/2 - 50		ns
SIp setup time (to SCKp↑)Note 1	t_{SIK1}	4.0 V ≤ EV_{DD0} ≤ 5.5 V, 2.7 V ≤ V_b ≤ 4.0 V, C_b = 20 pF, R_b = 1.4 kΩ		58		58		479		ns
		2.7 V ≤ EV_{DD0} < 4.0 V, 2.3 V ≤ V_b ≤ 2.7 V, C_b = 20 pF, R_b = 2.7 kΩ		121		121		479		ns
SIp hold time (from SCKp↑)Note 1	t_{KSI1}	4.0 V ≤ EV_{DD0} ≤ 5.5 V, 2.7 V ≤ V_b ≤ 4.0 V, C_b = 20 pF, R_b = 1.4 kΩ		10		10		10		ns
		2.7 V ≤ EV_{DD0} < 4.0 V, 2.3 V ≤ V_b ≤ 2.7 V, C_b = 20 pF, R_b = 2.7 kΩ		10		10		10		ns
Delay time from SCKp↓ to SOp outputNote 1	t_{KSO1}	4.0 V ≤ EV_{DD0} ≤ 5.5 V, 2.7 V ≤ V_b ≤ 4.0 V, C_b = 20 pF, R_b = 1.4 kΩ			60		60		60	ns
		2.7 V ≤ EV_{DD0} < 4.0 V, 2.3 V ≤ V_b ≤ 2.7 V, C_b = 20 pF, R_b = 2.7 kΩ			130		130		130	ns

(Notes, Caution, and Remarks are listed on the next page.)

Downloaded from Arrow.com.

7. In simplified SPI (CSI) communications in the master mode with devices operating at different voltage levels (2.5 V or 3 V) with the internal SCKp clock (the ratings below are only applicable to CSI00)

(T_A = -40 to +105°C, 2.7 V ≤ EV_{DD0} = EV_{DD1} ≤ V_{DD} ≤ 5.5 V, V_{SS} = EV_{SS0} = EV_{SS1} = 0 V) (2/2)

Item	Symbol	Conditions	HS (High-Speed Main) Mode		LS (Low-Speed Main) Mode		LP (Low-Power Main) Mode		Unit
			Min.	Max.	Min.	Max.	Min.	Max.	
SIp setup time (to SCKp↓)Note 2	t_{SIK1}	4.0 V ≤ EV_{DD0} ≤ 5.5 V, 2.7 V ≤ V_b ≤ 4.0 V, C_b = 20 pF, R_b = 1.4 kΩ	23		23		110		ns
		2.7 V ≤ EV_{DD0} < 4.0 V, 2.3 V ≤ V_b ≤ 2.7 V, C_b = 20 pF, R_b = 2.7 kΩ	33		33		110		ns
SIp hold time (from SCKp↓)Note 2	t_{KSI1}	4.0 V ≤ EV_{DD0} ≤ 5.5 V, 2.7 V ≤ V_b ≤ 4.0 V, C_b = 20 pF, R_b = 1.4 kΩ	10		10		10		ns
		2.7 V ≤ EV_{DD0} < 4.0 V, 2.3 V ≤ V_b ≤ 2.7 V, C_b = 20 pF, R_b = 2.7 kΩ	10		10		10		ns
Delay time from SCKp↑ to SOp outputNote 2	t_{KSO1}	4.0 V ≤ EV_{DD0} ≤ 5.5 V, 2.7 V ≤ V_b ≤ 4.0 V, C_b = 20 pF, R_b = 1.4 kΩ		10		10		10	ns
		2.7 V ≤ EV_{DD0} < 4.0 V, 2.3 V ≤ V_b ≤ 2.7 V, C_b = 20 pF, R_b = 2.7 kΩ		10		10		10	ns

Note 1. This setting applies when DAPmn = 0 and CKPmn = 0, or DAPmn = 1 and CKPmn = 1.

Note 2. This setting applies when DAPmn = 0 and CKPmn = 1, or DAPmn = 1 and CKPmn = 0.

Caution **Select the TTL input buffer for the SIp pin and the N-ch open drain output (withstand voltage of V_{DD} (when 30- to 52-pin products)/withstand voltage of EV_{DD} (when 64- to 128-pin products)) mode for the SOp pin and SCKp pin by using a port input mode register (PIMg) and port output mode register (POMg). For V_{IH} and V_{IL}, see the DC characteristics with TTL input buffer selected.**

Remark 1. R_b[Ω]: Communication line (SCKp, SOp) pull-up resistance, C_b[F]: Communication line (SCKp, SOp) load capacitance, V_b[V]: Communication line voltage

Remark 2. p: CSI number (p = 00), m: Unit number (m = 0), n: Channel number (n = 0), g: PIM and POM numbers (g = 1)

Remark 3. f_{MCK}: Serial array unit operation clock frequency
(To set this operating clock, use the CKSmn bit in the serial mode register mn (SMRmn) (m: Unit number, n: Channel number = 00).)

Remark 4. The listed times are only valid when the peripheral I/O redirect function of CSI00 is not in use.

Downloaded from Arrow.com.

8. In simplified SPI (CSI) communications in the master mode with devices operating at different voltage levels (1.8 V, 2.5 V, or 3 V) with the internal SCKp clock

(T_A = -40 to +105°C, 1.8 V ≤ EV_{DD0} = EV_{DD1} ≤ V_{DD} ≤ 5.5 V, V_{SS} = EV_{SS0} = EV_{SS1} = 0 V) (1/3)

Item	Symbol	Conditions		HS (High-Speed Main) Mode		LS (Low-Speed Main) Mode		LP (Low-Power Main) Mode		Unit
				Min.	Max.	Min.	Max.	Min.	Max.	
SCKp cycle time	t_{KCY1}	t_{KCY1} ≥ 4/f_{CLK}	4.0 V ≤ EV_{DD0} ≤ 5.5 V, 2.7 V ≤ V_b ≤ 4.0 V, C_b = 30 pF, R_b = 1.4 kΩ	300		300		2300		ns
			2.7 V ≤ EV_{DD0} < 4.0 V, 2.3 V ≤ V_b ≤ 2.7 V, C_b = 30 pF, R_b = 2.7 kΩ	500		500		2300		ns
			1.8 V ≤ EV_{DD0} < 3.3 V, 1.6 V ≤ V_b ≤ 2.0 V[Note], C_b = 30 pF, R_b = 5.5 kΩ	1150		1150		2300		ns
SCKp high-level width	t_{KH1}	4.0 V ≤ EV_{DD0} ≤ 5.5 V, 2.7 V ≤ V_b ≤ 4.0 V, C_b = 30 pF, R_b = 1.4 kΩ		t_{KCY1}/2 - 75		t_{KCY1}/2 - 75		t_{KCY1}/2 - 75		ns
		2.7 V ≤ EV_{DD0} < 4.0 V, 2.3 V ≤ V_b ≤ 2.7 V, C_b = 30 pF, R_b = 2.7 kΩ		t_{KCY1}/2 - 170		t_{KCY1}/2 - 170		t_{KCY1}/2 - 170		ns
		1.8 V ≤ EV_{DD0} < 3.3 V, 1.6 V ≤ V_b ≤ 2.0 V[Note], C_b = 30 pF, R_b = 5.5 kΩ		t_{KCY1}/2 - 458		t_{KCY1}/2 - 458		t_{KCY1}/2 - 458		ns
SCKp low-level width	t_{KL1}	4.0 V ≤ EV_{DD0} ≤ 5.5 V, 2.7 V ≤ V_b ≤ 4.0 V, C_b = 30 pF, R_b = 1.4 kΩ		t_{KCY1}/2 - 12		t_{KCY1}/2 - 12		t_{KCY1}/2 - 50		ns
		2.7 V ≤ EV_{DD0} < 4.0 V, 2.3 V ≤ V_b ≤ 2.7 V, C_b = 30 pF, R_b = 2.7 kΩ		t_{KCY1}/2 - 18		t_{KCY1}/2 - 18		t_{KCY1}/2 - 50		ns
		1.8 V ≤ EV_{DD0} < 3.3 V, 1.6 V ≤ V_b ≤ 2.0 V[Note], C_b = 30 pF, R_b = 5.5 kΩ		t_{KCY1}/2 - 50		t_{KCY1}/2 - 50		t_{KCY1}/2 - 50		ns

Note Use this setting with EV_{DD0} ≥ V_b.

Caution **Select the TTL input buffer for the SIp pin and the N-ch open drain output (withstand voltage of V_{DD} (when 30- to 52-pin products)/withstand voltage of EV_{DD} (when 64- to 128-pin products)) mode for the SOp pin and SCKp pin by using a port input mode register (PIMg) and port output mode register (POMg). For V_{IH} and V_{IL}, see the DC characteristics with TTL input buffer selected.**

(Remarks are listed on page 130.)

Downloaded from Arrow.com.

8. In simplified SPI (CSI) communications in the master mode with devices operating at different voltage levels (1.8 V, 2.5 V, or 3 V) with the internal SCKp clock

(T_A = -40 to +105°C, 1.8 V ≤ EV_{DD0} = EV_{DD1} ≤ V_{DD} ≤ 5.5 V, V_{SS} = EV_{SS0} = EV_{SS1} = 0 V) (2/3)

Item	Symbol	Conditions	HS (High-Speed Main) Mode		LS (Low-Speed Main) Mode		LP (Low-Power Main) Mode		Unit
			Min.	Max.	Min.	Max.	Min.	Max.	
SIp setup time (to SCKp↑)Note 1	t_{SIK1}	4.0 V ≤ EV_{DD0} ≤ 5.5 V, 2.7 V ≤ V_b ≤ 4.0 V, C_b = 30 pF, R_b = 1.4 kΩ	81		81		479		ns
		2.7 V ≤ EV_{DD0} < 4.0 V, 2.3 V ≤ V_b ≤ 2.7 V, C_b = 30 pF, R_b = 2.7 kΩ	177		177		479		ns
		1.8 V ≤ EV_{DD0} < 3.3 V, 1.6 V ≤ V_b ≤ 2.0 VNote 2, C_b = 30 pF, R_b = 5.5 kΩ	479		479		479		ns
SIp hold time (from SCKp↑)Note 1	t_{KSI1}	4.0 V ≤ EV_{DD0} ≤ 5.5 V, 2.7 V ≤ V_b ≤ 4.0 V, C_b = 30 pF, R_b = 1.4 kΩ	19		19		19		ns
		2.7 V ≤ EV_{DD0} < 4.0 V, 2.3 V ≤ V_b ≤ 2.7 V, C_b = 30 pF, R_b = 2.7 kΩ	19		19		19		ns
		1.8 V ≤ EV_{DD0} < 3.3 V, 1.6 V ≤ V_b ≤ 2.0 VNote 2, C_b = 30 pF, R_b = 5.5 kΩ	19		19		19		ns
Delay time from SCKp↓ to SOp outputNote 1	t_{KSO1}	4.0 V ≤ EV_{DD0} ≤ 5.5 V, 2.7 V ≤ V_b ≤ 4.0 V, C_b = 30 pF, R_b = 1.4 kΩ		100		100		100	ns
		2.7 V ≤ EV_{DD0} < 4.0 V, 2.3 V ≤ V_b ≤ 2.7 V, C_b = 30 pF, R_b = 2.7 kΩ		195		195		195	ns
		1.8 V ≤ EV_{DD0} < 3.3 V, 1.6 V ≤ V_b ≤ 2.0 VNote 2, C_b = 30 pF, R_b = 5.5 kΩ		483		483		483	ns

Note 1. This setting applies when DAPmn = 0 and CKPmn = 0, or DAPmn = 1 and CKPmn = 1.

Note 2. Use this setting with EV_{DD0} ≥ V_b.

Caution **Select the TTL input buffer for the SIp pin and the N-ch open drain output (withstand voltage of V_{DD} (when 30- to 52-pin products)/withstand voltage of EV_{DD} (when 64- to 128-pin products)) mode for the SOp pin and SCKp pin by using a port input mode register (PIMg) and port output mode register (POMg). For V_{IH} and V_{IL}, see the DC characteristics with TTL input buffer selected.**

(Remarks are listed on page 130.)

Downloaded from Arrow.com.

8. In simplified SPI (CSI) communications in the master mode with devices operating at different voltage levels (1.8 V, 2.5 V, or 3 V) with the internal SCKp clock

(T_A = -40 to +105°C, 1.8 V ≤ EV_{DD0} = EV_{DD1} ≤ V_{DD} ≤ 5.5 V, V_{SS} = EV_{SS0} = EV_{SS1} = 0 V) (3/3)

Item	Symbol	Conditions	HS (High-Speed Main) Mode		LS (Low-Speed Main) Mode		LP (Low-Power Main) Mode		Unit
			Min.	Max.	Min.	Max.	Min.	Max.	
SIp setup time (to SCKp↓)Note 1	t_{SIK1}	4.0 V ≤ EV_{DD0} ≤ 5.5 V, 2.7 V ≤ V_b ≤ 4.0 V, C_b = 30 pF, R_b = 1.4 kΩ	44		44		110		ns
		2.7 V ≤ EV_{DD0} < 4.0 V, 2.3 V ≤ V_b ≤ 2.7 V, C_b = 30 pF, R_b = 2.7 kΩ	44		44		110		ns
		1.8 V ≤ EV_{DD0} < 3.3 V, 1.6 V ≤ V_b ≤ 2.0 VNote 2, C_b = 30 pF, R_b = 5.5 kΩ	110		110		110		ns
SIp hold time (from SCKp↓)Note 1	t_{KSI1}	4.0 V ≤ EV_{DD0} ≤ 5.5 V, 2.7 V ≤ V_b ≤ 4.0 V, C_b = 30 pF, R_b = 1.4 kΩ	19		19		19		ns
		2.7 V ≤ EV_{DD0} < 4.0 V, 2.3 V ≤ V_b ≤ 2.7 V, C_b = 30 pF, R_b = 2.7 kΩ	19		19		19		ns
		1.8 V ≤ EV_{DD0} < 3.3 V, 1.6 V ≤ V_b ≤ 2.0 VNote 2, C_b = 30 pF, R_b = 5.5 kΩ	19		19		19		ns
Delay time from SCKp↑ to SOp outputNote 1	t_{KSO1}	4.0 V ≤ EV_{DD0} ≤ 5.5 V, 2.7 V ≤ V_b ≤ 4.0 V, C_b = 30 pF, R_b = 1.4 kΩ		25		25		25	ns
		2.7 V ≤ EV_{DD0} < 4.0 V, 2.3 V ≤ V_b ≤ 2.7 V, C_b = 30 pF, R_b = 2.7 kΩ		25		25		25	ns
		1.8 V ≤ EV_{DD0} < 3.3 V, 1.6 V ≤ V_b ≤ 2.0 VNote 2, C_b = 30 pF, R_b = 5.5 kΩ		25		25		25	ns

Note 1. This setting applies when DAPmn = 0 and CKPmn = 1, or DAPmn = 1 and CKPmn = 0.

Note 2. Use this setting with EV_{DD0} ≥ V_b.

Caution **Select the TTL input buffer for the SIp pin and the N-ch open drain output (withstand voltage of V_{DD} (when 30- to 52-pin products)/withstand voltage of EV_{DD} (when 64- to 128-pin products)) mode for the SOp pin and SCKp pin by using a port input mode register (PIMg) and port output mode register (POMg). For V_{IH} and V_{IL}, see the DC characteristics with TTL input buffer selected.**

(Remarks are listed on the next page.)

Downloaded from Arrow.com.

Connection in the simplified SPI (CSI) communications with devices operating at different voltage levels

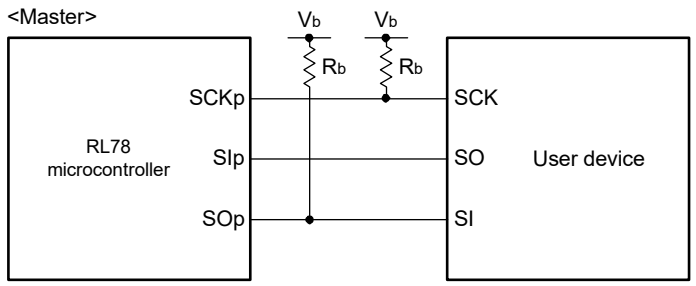

Remark 1. R_b[Ω]: Communication line (SCKp, SOp) pull-up resistance, C_b[F]: Communication line (SCKp, SOp) load capacitance, V_b[V]: Communication line voltage

Remark 2. p: CSI number (p = 00, 01, 10, 20, 30, 31), m: Unit number, n: Channel number (mn = 00, 01, 02, 10, 12, 13), g: PIM and POM number (g = 0, 1, 4, 5, 8, 14)

Remark 3. f_{MCK}: Serial array unit operation clock frequency
(To set this operating clock, use the CKSmn bit in the serial mode register mn (SMRmn) (m: Unit number, n: Channel number = 00).)

Remark 4. Communications by using CSI01 of 48- to 64-pin products, and CSI11 and CSI21 with devices operating at different voltage levels are not possible. Use other CSI channels to handle such communications.

Timing of serial transfer in the simplified SPI (CSI) communications in the master mode with devices operating at different voltage levels when DAPmn = 0 and CKPmn = 0, or DAPmn = 1 and CKPmn = 1

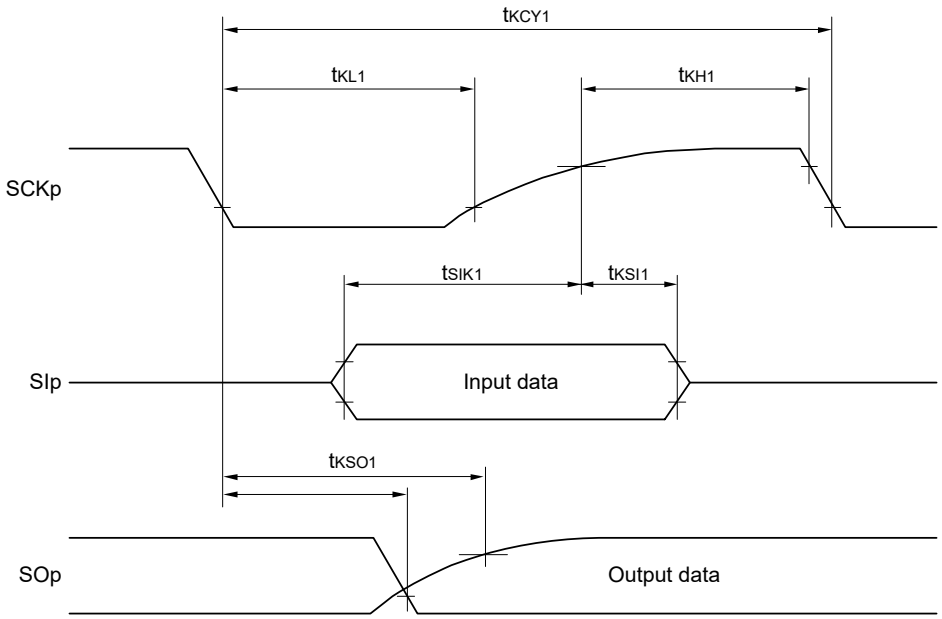

Downloaded from Arrow.com.

Timing of serial transfer in the simplified SPI (CSI) communications in the master mode with devices operating at different voltage levels when DAPmn = 0 and CKPmn = 1, or DAPmn = 1 and CKPmn = 0

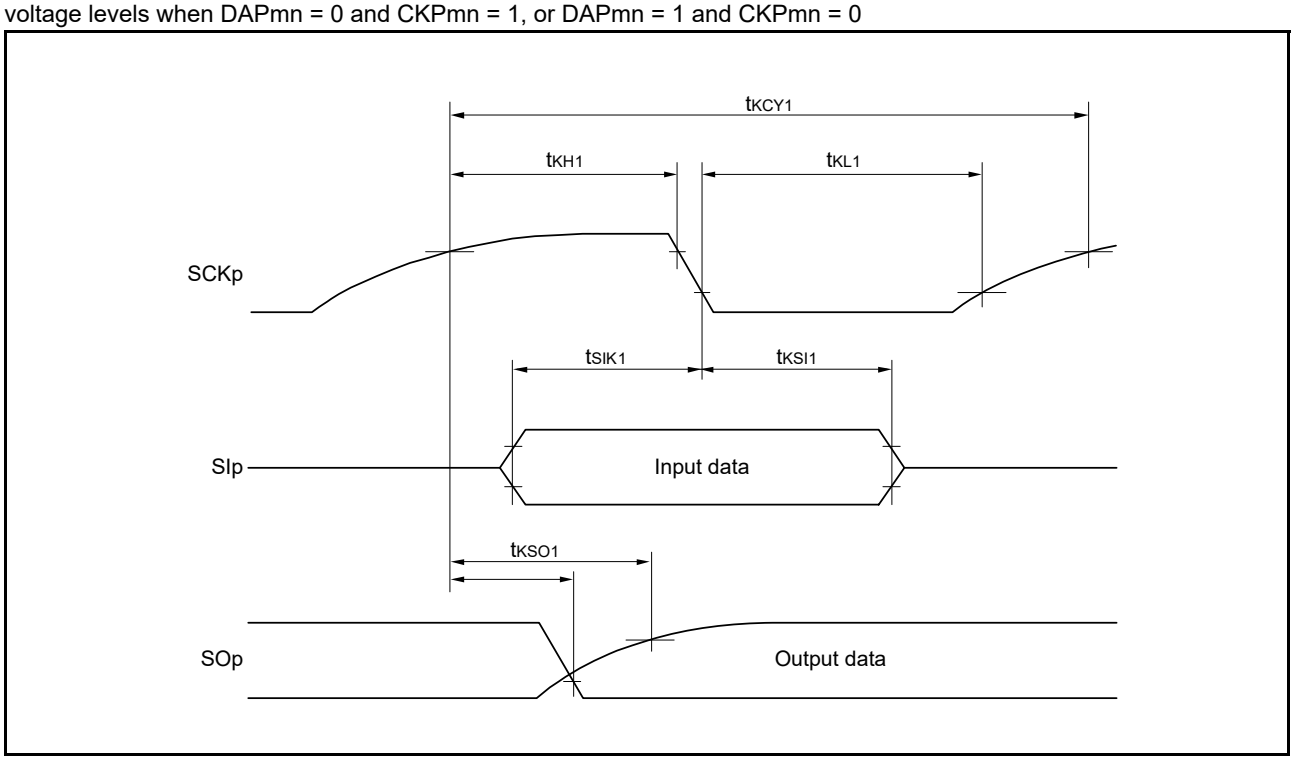

Remark 1. p: CSI number (p = 00, 01, 10, 20, 30, 31), m: Unit number, n: Channel number (mn = 00, 01, 02, 10, 12, 13), g: PIM and POM number (g = 0, 1, 4, 5, 8, 14)

Remark 2. Communications by using CSI01 of 48- to 64-pin products, and CSI11 and CSI21 with devices operating at different voltage levels are not possible. Use other CSI channels to handle such communications.

Downloaded from Arrow.com.

9. In simplified SPI (CSI) communications in the slave mode with devices operating at different voltage levels (1.8 V, 2.5 V, or 3 V) with the external SCKp clock

(T_A = -40 to +105°C, 1.8 V ≤ EV_{DD0} = EV_{DD1} ≤ V_{DD} ≤ 5.5 V, V_{SS} = EV_{SS0} = EV_{SS1} = 0 V) (1/2)

Item	Symbol	Conditions		HS (High-Speed Main) Mode		LS (Low-Speed Main) Mode		LP (Low-Power Main) Mode		Unit
				Min.	Max.	Min.	Max.	Min.	Max.	
SCKp cycle time **Note 1**	t_{KCY2}	4.0 V ≤ EV_{DD0} ≤ 5.5 V, 2.7 V ≤ V_b ≤ 4.0 V	24 MHz < f_{MCK}	14/f_{MCK}		—		—		ns
			20 MHz < f_{MCK} ≤ 24 MHz	12/f_{MCK}		12/f_{MCK}		—		ns
			8 MHz < f_{MCK} ≤ 20 MHz	10/f_{MCK}		10/f_{MCK}		—		ns
			4 MHz < f_{MCK} ≤ 8 MHz	8/f_{MCK}		8/f_{MCK}		—		ns
			f_{MCK} ≤ 4 MHz	6/f_{MCK}		6/f_{MCK}		10/f_{MCK}		ns
		2.7 V ≤ EV_{DD0} < 4.0 V, 2.3 V ≤ V_b ≤ 2.7 V,	24 MHz < f_{MCK}	20/f_{MCK}		—		—		ns
			20 MHz < f_{MCK} ≤ 24 MHz	16/f_{MCK}		16/f_{MCK}		—		ns
			16 MHz < f_{MCK} ≤ 20 MHz	14/f_{MCK}		14/f_{MCK}		—		ns
			8 MHz < f_{MCK} ≤ 16 MHz	12/f_{MCK}		12/f_{MCK}		—		ns
			4 MHz < f_{MCK} ≤ 8 MHz	8/f_{MCK}		8/f_{MCK}		—		ns
			f_{MCK} ≤ 4 MHz	6/f_{MCK}		6/f_{MCK}		10/f_{MCK}		ns
		1.8 V ≤ EV_{DD0} < 3.3 V, 1.6 V ≤ V_b ≤ 2.0 V **Note 2**	24 MHz < f_{MCK}	48/f_{MCK}		—		—		ns
			20 MHz < f_{MCK} ≤ 24 MHz	36/f_{MCK}		36/f_{MCK}		—		ns
			16 MHz < f_{MCK} ≤ 20 MHz	32/f_{MCK}		32/f_{MCK}		—		ns
			8 MHz < f_{MCK} ≤ 16 MHz	26/f_{MCK}		26/f_{MCK}		—		ns
			4 MHz < f_{MCK} ≤ 8 MHz	16/f_{MCK}		16/f_{MCK}		—		ns
			f_{MCK} ≤ 4 MHz	10/f_{MCK}		10/f_{MCK}		10/f_{MCK}		ns

(Notes and Caution are listed on the next page, and Remarks are listed on page 134.)

Downloaded from Arrow.com.

9. In simplified SPI (CSI) communications in the slave mode with devices operating at different voltage levels (1.8 V, 2.5 V, or 3 V) with the external SCKp clock

(T_A = -40 to +105°C, 1.8 V ≤ EV_{DD0} = EV_{DD1} ≤ V_{DD} ≤ 5.5 V, V_{SS} = EV_{SS0} = EV_{SS1} = 0 V) (2/2)

Item	Symbol	Conditions	HS (High-Speed Main) Mode		LS (Low-Speed Main) Mode		LP (Low-Power Main) Mode		Unit
			Min.	Max.	Min.	Max.	Min.	Max.	
SCKp high-level width, low-level width	t_{KH2}, t_{KL2}	4.0 V ≤ EV_{DD0} ≤ 5.5 V, 2.7 V ≤ V_b ≤ 4.0 V	t_{KCY2}/2 - 12		t_{KCY2}/2 - 12		t_{KCY2}/2 - 50		ns
		2.7 V ≤ EV_{DD0} < 4.0 V, 2.3 V ≤ V_b ≤ 2.7 V	t_{KCY2}/2 - 18		t_{KCY2}/2 - 18		t_{KCY2}/2 - 50		ns
		1.8 V ≤ EV_{DD0} < 3.3 V, 1.6 V ≤ V_b ≤ 2.0 V**Note 2**	t_{KCY2}/2 - 50		t_{KCY2}/2 - 50		t_{KCY2}/2 - 50		ns
SIp setup time (to SCKp↑)**Note 3**	t_{SIK2}	4.0 V ≤ EV_{DD0} ≤ 5.5 V, 2.7 V ≤ V_b ≤ 4.0 V	1/f_{MCK} + 20		1/f_{MCK} + 20		1/f_{MCK} + 30		ns
		2.7 V ≤ EV_{DD0} < 4.0 V, 2.3 V ≤ V_b ≤ 2.7 V	1/f_{MCK} + 20		1/f_{MCK} + 20		1/f_{MCK} + 30		ns
		1.8 V ≤ EV_{DD0} < 3.3 V, 1.6 V ≤ V_b ≤ 2.0 V**Note 2**	1/f_{MCK} + 30		1/f_{MCK} + 30		1/f_{MCK} + 30		ns
SIp hold time (from SCKp↑)**Note 3**	t_{KSI2}		1/f_{MCK} + 31		1/f_{MCK} + 31		1/f_{MCK} + 31		ns
Delay time from SCKp↓ to SOp output**Note 4**	t_{KSO2}	4.0 V ≤ EV_{DD0} ≤ 5.5 V, 2.7 V ≤ V_b ≤ 4.0 V, C_b = 30 pF, R_b = 1.4 kΩ		2/f_{MCK} + 120		2/f_{MCK} + 120		2/f_{MCK} + 573	ns
		2.7 V ≤ EV_{DD0} < 4.0 V, 2.3 V ≤ V_b ≤ 2.7 V, C_b = 30 pF, R_b = 2.7 kΩ		2/f_{MCK} + 214		2/f_{MCK} + 214		2/f_{MCK} + 573	ns
		1.8 V ≤ EV_{DD0} < 3.3 V, 1.6 V ≤ V_b ≤ 2.0 V**Note 2**, C_b = 30 pF, R_b = 5.5 kΩ		2/f_{MCK} + 573		2/f_{MCK} + 573		2/f_{MCK} + 573	ns

Note 1. Transfer rate in the SNOOZE mode is 1 Mbps at the maximum.

Note 2. Use this setting with EV_{DD0} ≥ V_b.

Note 3. This setting applies when DAPmn = 0 and CKPmn = 0, or DAPmn = 1 and CKPmn = 1. The SIp setup time becomes "to SCKp↓" and SIp hold time becomes "from SCKp↓" when DAPmn = 0 and CKPmn = 1, or DAPmn = 1 and CKPmn = 0.

Note 4. This setting applies when DAPmn = 0 and CKPmn = 0, or DAPmn = 1 and CKPmn = 1. The delay time to SOp output becomes "from SCKp↑" when DAPmn = 0 and CKPmn = 1, or DAPmn = 1 and CKPmn = 0.

Caution **Select the TTL input buffer for the SIp pin and the N-ch open drain output (withstand voltage of V_{DD} (for the 30- to 52-pin products)/withstand voltage of EV_{DD} (for the 64- to 128-pin products)) mode for the SOp pin and SCKp pin by using a port input mode register (PIMg) and port output mode register (POMg). For V_{IH} and V_{IL}, see the DC characteristics with TTL input buffer selected.**

(Remarks are listed on the next page.)

Downloaded from Arrow.com.

Connection in the simplified SPI (CSI) communications with devices operating at different voltage levels

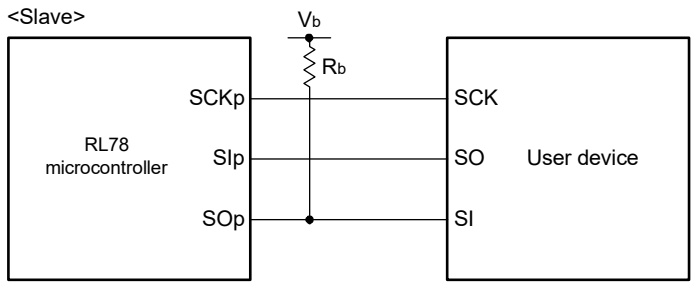

Remark 1. R_b[Ω]: Communication line (SOp) pull-up resistance, C_b[F]: Communication line (SOp) load capacitance, V_b[V]: Communication line voltage

Remark 2. p: CSI number (p = 00, 01, 10, 20, 30, 31), m: Unit number, n: Channel number (mn = 00, 01, 02, 10, 12, 13), g: PIM and POM number (g = 0, 1, 4, 5, 8, 14)

Remark 3. f_{MCK}: Serial array unit operation clock frequency
(To set this operating clock, use the CKSmn bit in the serial mode register mn (SMRmn) (m: Unit number, n: Channel number = 00, 01, 02, 10, 12 and 13).)

Remark 4. Communications by using CSI01 of 48- to 64-pin products, and CSI11 and CSI21 with devices operating at different voltage levels are not possible. Use other CSI channels to handle such communications.

Timing of serial transfer in the simplified SPI (CSI) communications in the slave mode with devices operating at different voltage levels when DAPmn = 0 and CKPmn = 0, or DAPmn = 1 and CKPmn = 1

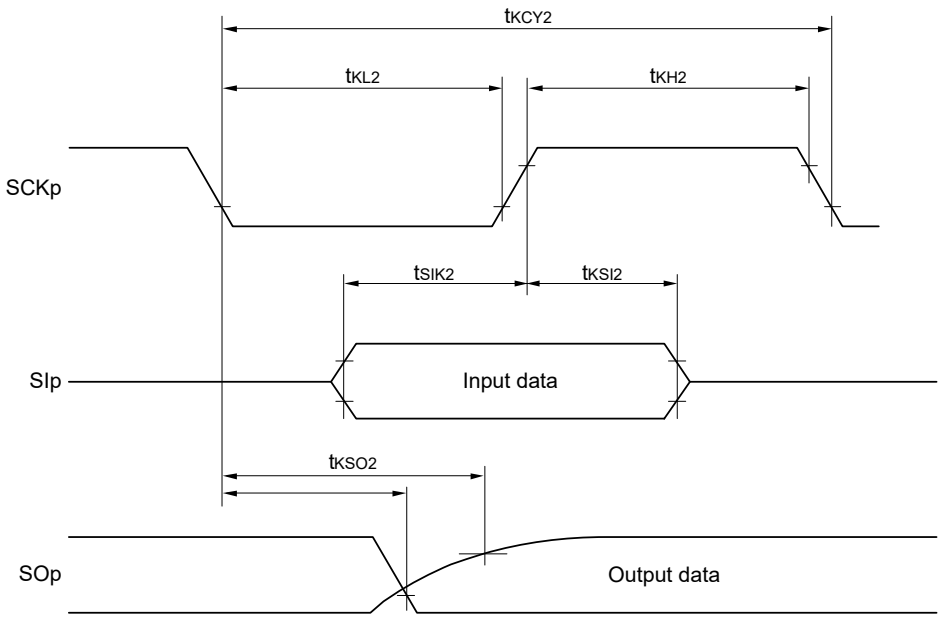

Downloaded from Arrow.com.

Timing of serial transfer in the simplified SPI (CSI) communications in the slave mode with devices operating at different voltage levels when DAPmn = 0 and CKPmn = 1, or DAPmn = 1 and CKPmn = 0

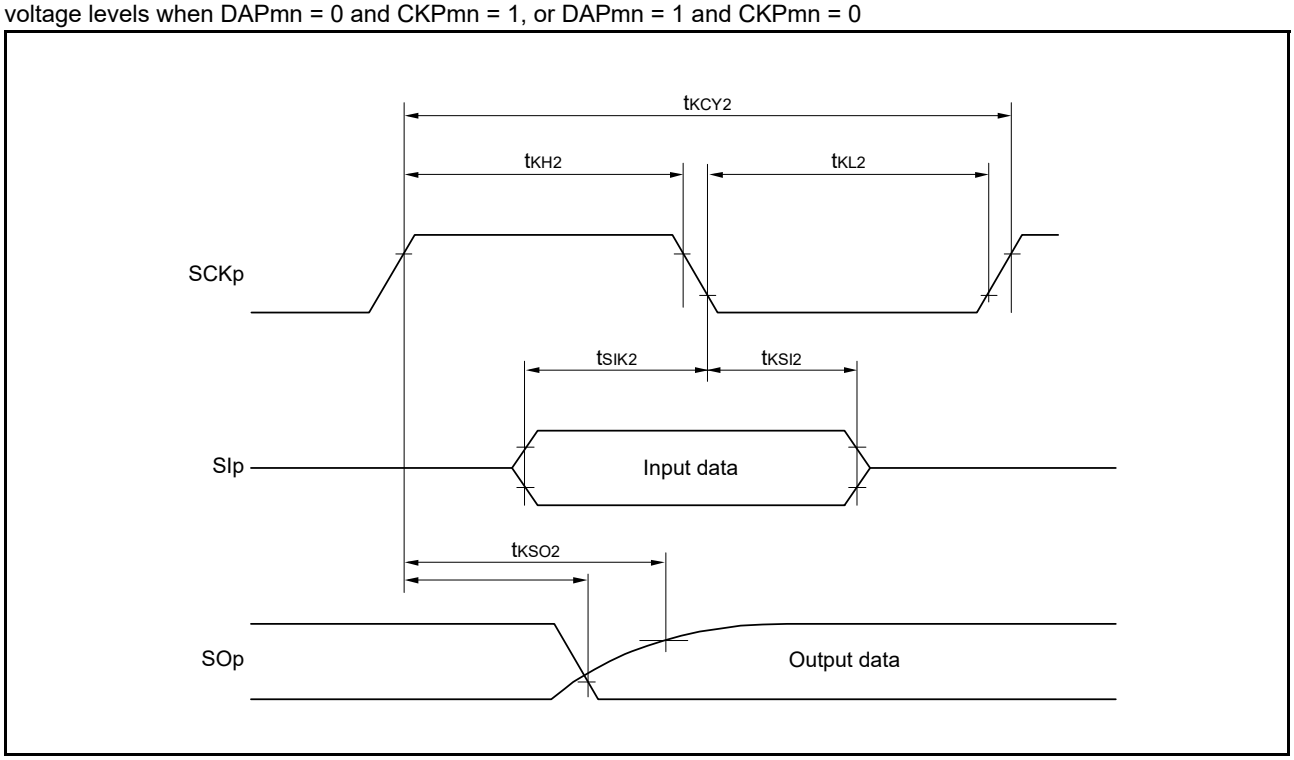

Remark 1. p: CSI number (p = 00, 01, 10, 20, 30, 31), m: Unit number, n: Channel number (mn = 00, 01, 02, 10, 12, 13), g: PIM and POM number (g = 0, 1, 4, 5, 8, 14)

Remark 2. Communications by using CSI01 of 48- to 64-pin products, and CSI11 and CSI21 with devices operating at different voltage levels are not possible. Use other CSI channels to handle such communications.

Downloaded from Arrow.com.

10. Simplified I²C communications with devices operating at different voltage levels (1.8 V, 2.5 V, or 3 V)

(T_A = -40 to +105°C, 1.8 V ≤ EV_{DD0} = EV_{DD1} ≤ V_{DD} ≤ 5.5 V, V_{SS} = EV_{SS0} = EV_{SS1} = 0 V) (1/2)

Item	Symbol	Conditions	HS (High-Speed Main) Mode		LS (Low-Speed Main) Mode		LP (Low-Power Main) Mode		Unit
			Min.	Max.	Min.	Max.	Min.	Max.	
SCLr clock frequency	f_{SCL}	4.0 V ≤ EV_{DD0} ≤ 5.5 V, 2.7 V ≤ V_b ≤ 4.0 V, C_b = 50 pF, R_b = 2.7 kΩ		1000 **Note 1**		1000 **Note 1**		300 **Note 1**	kHz
		2.7 V ≤ EV_{DD0} < 4.0 V, 2.3 V ≤ V_b ≤ 2.7 V, C_b = 50 pF, R_b = 2.7 kΩ		1000 **Note 1**		1000 **Note 1**		300 **Note 1**	kHz
		4.0 V ≤ EV_{DD0} ≤ 5.5 V, 2.7 V ≤ V_b ≤ 4.0 V, C_b = 100 pF, R_b = 2.8 kΩ		400 **Note 1**		400 **Note 1**		300 **Note 1**	kHz
		2.7 V ≤ EV_{DD0} < 4.0 V, 2.3 V ≤ V_b ≤ 2.7 V, C_b = 100 pF, R_b = 2.7 kΩ		400 **Note 1**		400 **Note 1**		300 **Note 1**	kHz
		1.8 V ≤ EV_{DD0} < 3.3 V, 1.6 V ≤ V_b ≤ 2.0 V**Note 2**, C_b = 100 pF, R_b = 5.5 kΩ		300 **Note 1**		300 **Note 1**		300 **Note 1**	kHz
Hold time when SCLr is low	t_{LOW}	4.0 V ≤ EV_{DD0} ≤ 5.5 V, 2.7 V ≤ V_b ≤ 4.0 V, C_b = 50 pF, R_b = 2.7 kΩ	475		475		1550		ns
		2.7 V ≤ EV_{DD0} < 4.0 V, 2.3 V ≤ V_b ≤ 2.7 V, C_b = 50 pF, R_b = 2.7 kΩ	475		475		1550		ns
		4.0 V ≤ EV_{DD0} ≤ 5.5 V, 2.7 V ≤ V_b ≤ 4.0 V, C_b = 100 pF, R_b = 2.8 kΩ	1150		1550		1550		ns
		2.7 V ≤ EV_{DD0} < 4.0 V, 2.3 V ≤ V_b ≤ 2.7 V, C_b = 100 pF, R_b = 2.7 kΩ	1150		1550		1550		ns
		1.8 V ≤ EV_{DD0} < 3.3 V, 1.6 V ≤ V_b ≤ 2.0 V**Note 2**, C_b = 100 pF, R_b = 5.5 kΩ	1550		1550		1550		ns
Hold time when SCLr is high	t_{HIGH}	4.0 V ≤ EV_{DD0} ≤ 5.5 V, 2.7 V ≤ V_b ≤ 4.0 V, C_b = 50 pF, R_b = 2.7 kΩ	245		245		610		ns
		2.7 V ≤ EV_{DD0} < 4.0 V, 2.3 V ≤ V_b ≤ 2.7 V, C_b = 50 pF, R_b = 2.7 kΩ	200		200		610		ns
		4.0 V ≤ EV_{DD0} ≤ 5.5 V, 2.7 V ≤ V_b ≤ 4.0 V, C_b = 100 pF, R_b = 2.8 kΩ	675		675		610		ns
		2.7 V ≤ EV_{DD0} < 4.0 V, 2.3 V ≤ V_b ≤ 2.7 V, C_b = 100 pF, R_b = 2.7 kΩ	600		600		610		ns
		1.8 V ≤ EV_{DD0} < 3.3 V, 1.6 V ≤ V_b ≤ 2.0 V**Note 2**, C_b = 100 pF, R_b = 5.5 kΩ	610		610		610		ns

Downloaded from Arrow.com.

10. Simplified I²C communications with devices operating at different voltage levels (1.8 V, 2.5 V, and 3 V)

(T_A = -40 to +105°C, 1.8 V ≤ EV_{DD0} = EV_{DD1} ≤ V_{DD} ≤ 5.5 V, V_{SS} = EV_{SS0} = EV_{SS1} = 0 V) (2/2)

Item	Symbol	Conditions	HS (High-Speed Main) Mode		LS (Low-Speed Main) Mode		LP (Low-Power Main) Mode		Unit
			Min.	Max.	Min.	Max.	Min.	Max.	
Data setup time (reception)	$t_{SU:DAT}$	4.0 V ≤ EV_{DD0} ≤ 5.5 V, 2.7 V ≤ V_b ≤ 4.0 V, C_b = 50 pF, R_b = 2.7 kΩ	1/f_{MCK} + 135 **Note 3**		1/f_{MCK} + 135 **Note 3**		1/f_{MCK} + 190 **Note 3**		ns
		2.7 V ≤ EV_{DD0} < 4.0 V, 2.3 V ≤ V_b ≤ 2.7 V, C_b = 50 pF, R_b = 2.7 kΩ	1/f_{MCK} + 135 **Note 3**		1/f_{MCK} + 135 **Note 3**		1/f_{MCK} + 190 **Note 3**		ns
		4.0 V ≤ EV_{DD0} ≤ 5.5 V, 2.7 V ≤ V_b ≤ 4.0 V, C_b = 100 pF, R_b = 2.8 kΩ	1/f_{MCK} + 190 **Note 3**		1/f_{MCK} + 190 **Note 3**		1/f_{MCK} + 190 **Note 3**		ns
		2.7 V ≤ EV_{DD0} < 4.0 V, 2.3 V ≤ V_b ≤ 2.7 V, C_b = 100 pF, R_b = 2.7 kΩ	1/f_{MCK} + 190 **Note 3**		1/f_{MCK} + 190 **Note 3**		1/f_{MCK} + 190 **Note 3**		ns
		1.8 V ≤ EV_{DD0} < 3.3 V, 1.6 V ≤ V_b ≤ 2.0 V**Note 2**, C_b = 100 pF, R_b = 5.5 kΩ	1/f_{MCK} + 190 **Note 3**		1/f_{MCK} + 190 **Note 3**		1/f_{MCK} + 190 **Note 3**		ns
Data hold time (transmission)	$t_{HD:DAT}$	4.0 V ≤ EV_{DD0} ≤ 5.5 V, 2.7 V ≤ V_b ≤ 4.0 V, C_b = 50 pF, R_b = 2.7 kΩ	0	305	0	305	0	305	ns
		2.7 V ≤ EV_{DD0} < 4.0 V, 2.3 V ≤ V_b ≤ 2.7 V, C_b = 50 pF, R_b = 2.7 kΩ	0	305	0	305	0	305	ns
		4.0 V ≤ EV_{DD0} ≤ 5.5 V, 2.7 V ≤ V_b ≤ 4.0 V, C_b = 100 pF, R_b = 2.8 kΩ	0	355	0	355	0	355	ns
		2.7 V ≤ EV_{DD0} < 4.0 V, 2.3 V ≤ V_b ≤ 2.7 V, C_b = 100 pF, R_b = 2.7 kΩ	0	355	0	355	0	355	ns
		1.8 V ≤ EV_{DD0} < 3.3 V, 1.6 V ≤ V_b ≤ 2.0 V**Note 2**, C_b = 100 pF, R_b = 5.5 kΩ	0	405	0	405	0	405	ns

Note 1. The listed times must be no greater than f_{MCK}/4.

Note 2. Use this setting with EV_{DD0} ≥ V_b.

Note 3. Set f_{MCK} so that it will not exceed the hold time when SCLr is low or high.

Caution **Select the TTL input buffer and the N-ch open drain output (withstand voltage of V_{DD} (for the 30- to 52-pin products)/withstand voltage of EV_{DD} (for the 64- to 128-pin products)) mode for the SDAr pin and the N-ch open drain output (withstand voltage of V_{DD} (for the 30- to 52-pin products)/withstand voltage of EV_{DD} (for the 64- to 128-pin products)) mode for the SCLr pin by using a port input mode register (PIMg) and port output mode register (POMg). For V_{IH} and V_{IL}, see the DC characteristics with TTL input buffer selected.**

(Remarks are listed on the next page.)

Downloaded from Arrow.com.

Connection in the I²C communications with devices operating at different voltage levels

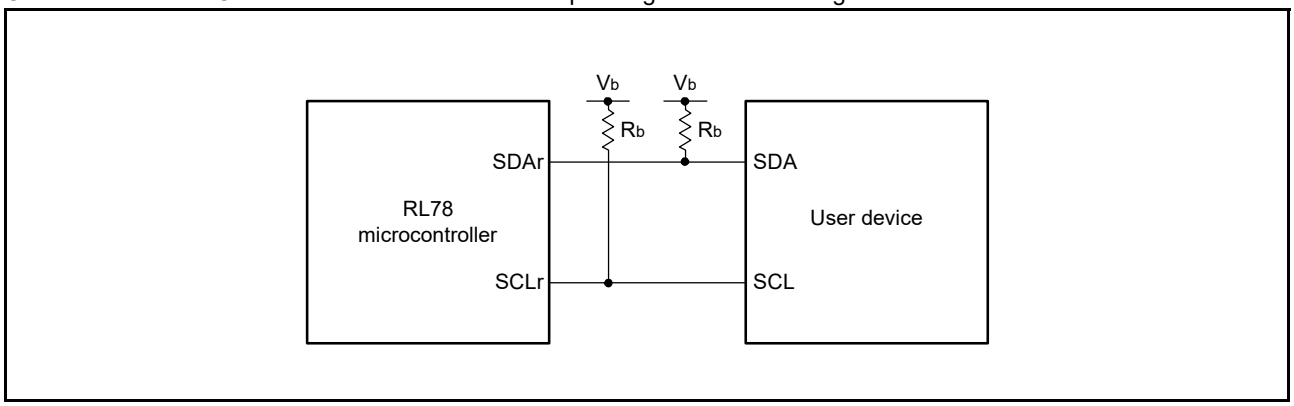

Timing of serial transfer in the simplified I²C communications with devices operating at different voltage levels

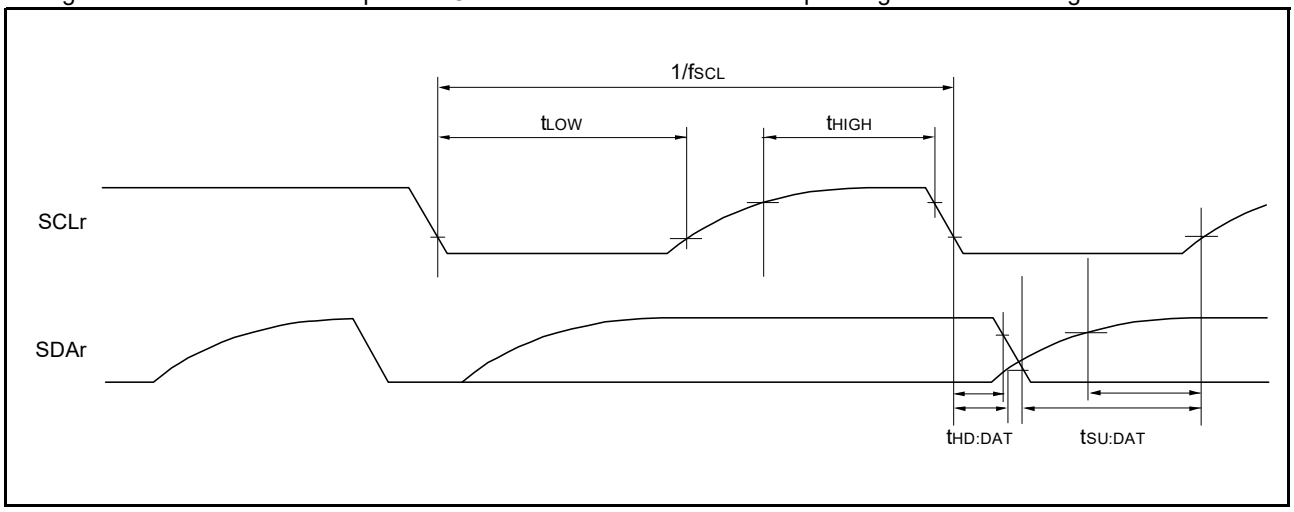

Remark 1. R_b[Ω]: Communication line (SDAr, SCLr) pull-up resistance, C_b[F]: Communication line (SDAr, SCLr) load capacitance, V_b[V]: Communication line voltage

Remark 2. r: IIC number (r = 00, 01, 10, 20, 30, 31), g: PIM and POM number (g = 0, 1, 4, 5, 8, 14)

Remark 3. f_{MCK}: Serial array unit operation clock frequency
(To set this operating clock, use the CKSmn bit in the serial mode register mn (SMRmn) (m: Unit number, n: Channel number = 00, 01, 02, 10, 12 and 13).)

Downloaded from Arrow.com.

2.5.2 Serial interface UARTA

(T_A = -40 to +105°C, 1.6 V ≤ EV_{DD0} = EV_{DD1} ≤ V_{DD} ≤ 5.5 V, V_{SS} = EV_{SS0} = EV_{SS1} = 0 V)

Item	Symbol	Conditions	Min.	Typ.	Max.	Unit
Transfer rate			200	0	153600	bps

<R> **Caution** **Select the normal input buffer for the RxDAn pin and the normal output mode for the TxDAn pin by using a port input mode register (PIMg) and port output mode register (POMg).**

Remark n = Unit number (n = 0, 1), g: PIM number (g = 3, 4, 7, 8), h: POM number (h = 3, 4, 7, 8, 12)

Downloaded from Arrow.com.

2.5.3 Serial interface IICA

1. I²C standard mode

(T_A = -40 to +105°C, 1.6 V ≤ EV_{DD0} = EV_{DD1} ≤ V_{DD} ≤ 5.5 V, V_{SS} = EV_{SS0} = EV_{SS1} = 0 V)

Item	Symbol	Conditions	Min.	Typ.	Max.	Unit
SCLA0 clock frequency	f_{SCL}	Standard mode: f_{CLK} ≥ 1 MHz	0		100	kHz
Setup time of restart condition	$t_{SU:STA}$		4.7			μs
Hold time[Note 1]	$t_{HD:STA}$		4.0			μs
Hold time when SCLA0 is low	t_{LOW}		4.7			μs
Hold time when SCLA0 is high	t_{HIGH}		4.0			μs
Data setup time (reception)	$t_{SU:DAT}$		250			ns
Data hold time (transmission)[Note 2]	$t_{HD:DAT}$		0		3.45	μs
Setup time of stop condition	$t_{SU:STO}$		4.0			μs
Bus-free time	t_{BUF}		4.7			μs

Note 1. The first clock pulse is generated after this period when the start or restart condition is detected.

Note 2. The maximum value of $t_{HD:DAT}$ applies to normal transfer. The clock stretching will be inserted on reception of an acknowledgment (ACK) signal.

Caution **The listed frequency and times apply even when the PIOR2 bit in the peripheral I/O redirection register (PIOR) is 1. In such cases, the pin characteristics (I_{OH1}, I_{OL1}, V_{OH1}, V_{OL1}) must satisfy the values in the redirect destination.**

Remark The maximum value of communication line capacitance (C_b) and communication line pull-up resistor (R_b) are as follows.
C_b = 400 pF, R_b = 2.7 kΩ

Downloaded from Arrow.com.

2. I^2C fast mode

(T_A = -40 to +105°C, 1.6 V ≤ EV_{DD0} = EV_{DD1} ≤ V_{DD} ≤ 5.5 V, V_{SS} = EV_{SS0} = EV_{SS1} = 0 V)

Item	Symbol	Conditions	Min.	Typ.	Max.	Unit
SCLA0 clock frequency	f_{SCL}	Fast mode: f_{CLK} ≥ 3.5 MHz 1.8 V ≤ EV_{DD0} ≤ 5.5 V	0		400	kHz
Setup time of restart condition	$t_{SU:STA}$	1.8 V ≤ EV_{DD0} ≤ 5.5 V	0.6			μs
Hold time[Note 1]	$t_{HD:STA}$	1.8 V ≤ EV_{DD0} ≤ 5.5 V	0.6			μs
Hold time when SCLA0 is low	t_{LOW}	1.8 V ≤ EV_{DD0} ≤ 5.5 V	1.3			μs
Hold time when SCLA0 is high	t_{HIGH}	1.8 V ≤ EV_{DD0} ≤ 5.5 V	0.6			μs
Data setup time (reception)	$t_{SU:DAT}$	1.8 V ≤ EV_{DD0} ≤ 5.5 V	100			ns
Data hold time (transmission)[Note 2]	$t_{HD:DAT}$	1.8 V ≤ EV_{DD0} ≤ 5.5 V	0		0.9	μs
Setup time of stop condition	$t_{SU:STO}$	1.8 V ≤ EV_{DD0} ≤ 5.5 V	0.6			μs
Bus-free time	t_{BUF}	1.8 V ≤ EV_{DD0} ≤ 5.5 V	1.3			μs

Note 1. The first clock pulse is generated after this period when the start or restart condition is detected.

Note 2. The maximum value of $t_{HD:DAT}$ applies to normal transfer. The clock stretching will be inserted on reception of an acknowledgment (ACK) signal.

Caution **The values in the above table apply even when the PIOR2 bit in the peripheral I/O redirection register (PIOR) is 1. In such cases, the pin characteristics (I_{OH1}, I_{OL1}, V_{OH1}, V_{OL1}) must satisfy the values in the redirect destination.**

Remark The maximum value of communication line capacitance (C_b) and communication line pull-up resistor (R_b) are as follows.
C_b = 320 pF, R_b = 1.1 kΩ

Downloaded from Arrow.com.

3. I²C fast mode plus

(T_A = -40 to +105°C, 1.6 V ≤ EV_{DD0} = EV_{DD1} ≤ V_{DD} ≤ 5.5 V, V_{SS} = EV_{SS0} = EV_{SS1} = 0 V)

Item	Symbol	Conditions	Min.	Typ.	Max.	Unit
SCLA0 clock frequency	f_{SCL}	Fast mode plus: f_{CLK} ≥ 10 MHz 2.7 V ≤ EV_{DD0} ≤ 5.5 V	0		1000	kHz
Setup time of restart condition	$t_{SU:STA}$	2.7 V ≤ EV_{DD0} ≤ 5.5 V	0.26			μs
Hold time[Note 1]	$t_{HD:STA}$	2.7 V ≤ EV_{DD0} ≤ 5.5 V	0.26			μs
Hold time when SCLA0 is low	t_{LOW}	2.7 V ≤ EV_{DD0} ≤ 5.5 V	0.5			μs
Hold time when SCLA0 is high	t_{HIGH}	2.7 V ≤ EV_{DD0} ≤ 5.5 V	0.26			μs
Data setup time (reception)	$t_{SU:DAT}$	2.7 V ≤ EV_{DD0} ≤ 5.5 V	50			ns
Data hold time (transmission)[Note 2]	$t_{HD:DAT}$	2.7 V ≤ EV_{DD0} ≤ 5.5 V	0		0.45	μs
Setup time of stop condition	$t_{SU:STO}$	2.7 V ≤ EV_{DD0} ≤ 5.5 V	0.26			μs
Bus-free time	t_{BUF}	2.7 V ≤ EV_{DD0} ≤ 5.5 V	0.5			μs

Note 1. The first clock pulse is generated after this period when the start or restart condition is detected.

Note 2. The maximum value of $t_{HD:DAT}$ applies to normal transfer. The clock stretching will be inserted on reception of an acknowledgment (ACK) signal.

Caution **The values in the above table apply even when the PIOR2 bit in the peripheral I/O redirection register (PIOR) is 1. In such cases, the pin characteristics (I_{OH1}, I_{OL1}, V_{OH1}, V_{OL1}) must satisfy the values in the redirect destination.**

Remark The maximum value of communication line capacitance (C_b) and communication line pull-up resistor (R_b) are as follows.
C_b = 120 pF, R_b = 1.1 kΩ

IICA serial transfer timing

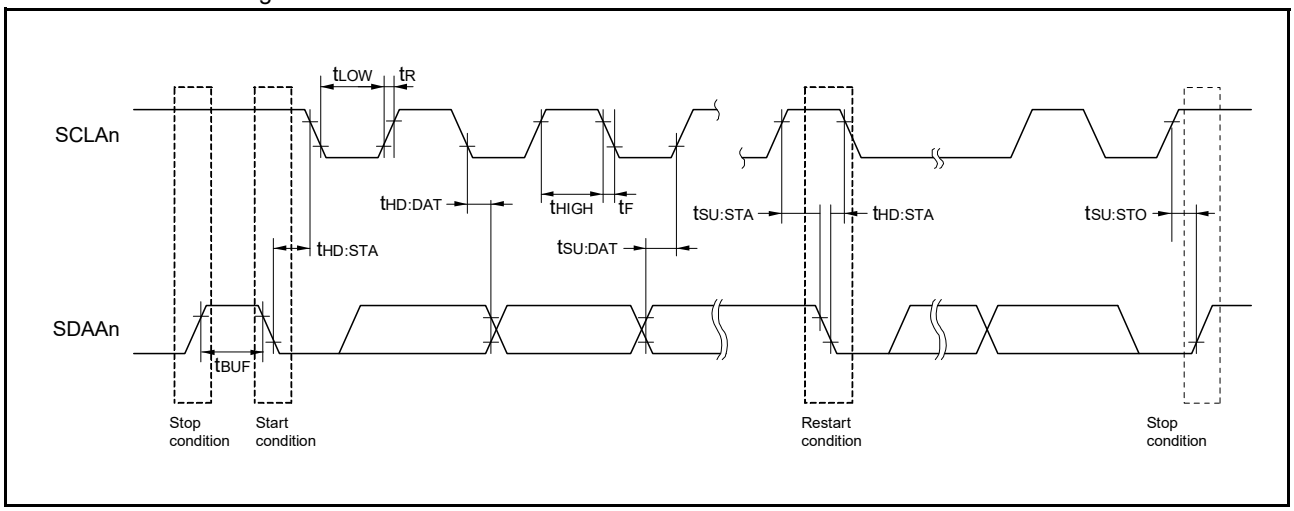

Remark n = 0, 1

Downloaded from Arrow.com.

2.6 Analog Characteristics

2.6.1 A/D converter characteristics

1. Normal modes 1 and 2

(T_A = -40 to +105°C, 2.4 V ≤ AV_{REFP} ≤ V_{DD} ≤ 5.5 V, V_{SS} = 0 V,
reference voltage (+) = AV_{REFP} (ADREFP1 = 0, ADREFP0 = 1), reference voltage (-) = AV_{REFM} (ADREFM = 1),
target pins: ANI2 to ANI14, internal reference voltage, and temperature sensor output voltage)

Item	Symbol	Conditions	Min.	Typ.	Max.	Unit
Resolution	RES				12	bit
Conversion clock	f_{AD}		1		32	MHz
Overall error Notes 1, 2, 3, 4, 5	AINL	4.5 V ≤ AV_{REFP} = V_{DD} ≤ 5.5 V		±2.4	±4.5	LSB
		2.7 V ≤ AV_{REFP} = V_{DD} ≤ 5.5 V		±2.9	±5.7	LSB
		2.4 V ≤ AV_{REFP} = V_{DD} ≤ 5.5 V		±3.0	±5.8	LSB
Conversion time Notes 5, 6	t_{CONV}	4.5 V ≤ AV_{REFP} = V_{DD} ≤ 5.5 V	2.0			μs
		2.7 V ≤ AV_{REFP} = V_{DD} ≤ 5.5 V	2.0			μs
		2.4 V ≤ AV_{REFP} = V_{DD} ≤ 5.5 V	2.0			μs
Zero-scale error Notes 1, 2, 3, 4, 5, 7	E_{ZS}	4.5 V ≤ AV_{REFP} = V_{DD} ≤ 5.5 V		±0.01	±0.08	%FSR
		2.7 V ≤ AV_{REFP} = V_{DD} ≤ 5.5 V		±0.01	±0.09	%FSR
		2.4 V ≤ AV_{REFP} = V_{DD} ≤ 5.5 V		±0.03	±0.13	%FSR
Full-scale error Notes 1, 2, 3, 4, 5, 7	E_{FS}	4.5 V ≤ AV_{REFP} = V_{DD} ≤ 5.5 V		±0.03	±0.09	%FSR
		2.7 V ≤ AV_{REFP} = V_{DD} ≤ 5.5 V		±0.05	±0.13	%FSR
		2.4 V ≤ AV_{REFP} = V_{DD} ≤ 5.5 V		±0.05	±0.13	%FSR
Analog input voltage	V_{AIN}		0		AV_{REFP}	V

Note 1. This value does not include the quantization error (±1/2 LSB).

Note 2. The values in the column Max. only apply in the case of a normal distribution with ±3σ variation from the mean.

Note 3. We do not inspect the characteristics of the A/D converter before shipment. The listed values are only results of evaluation.

Note 4. When AV_{REFP} < V_{DD}, the maximum values are as follows.

Overall error/zero-scale error/full-scale error: Add (±0.75 LSB × (V_{DD} voltage (V) - AV_{REFP} voltage (V)) to the maximum value.

Integral linearity error: Add (±0.2 LSB × (V_{DD} voltage (V) - AV_{REFP} voltage (V)) to the maximum value.

Note 5. The listed values apply when the conversion resolution is set to 12 bits.

Note 6. When the internal reference voltage or the temperature sensor output voltage is selected as the target for conversion, the sampling time must be at least 5 μs. Accordingly, use standard mode 2 with the longer sampling time.

Note 7. This value is indicated as a ratio (%FSR) to the full-scale value.

Downloaded from Arrow.com.

(T_A = -40 to +105°C, 2.4 V ≤ AV_{REFP} ≤ V_{DD} ≤ 5.5 V, V_{SS} = 0 V,
reference voltage (+) = AV_{REFP} (ADREFP1 = 0, ADREFP0 = 1), reference voltage (-) = AV_{REFM} (ADREFM = 1),
target pins: ANI2 to ANI14, internal reference voltage, and temperature sensor output voltage)

Item	Symbol	Conditions		Min.	Typ.	Max.	Unit
Resolution	RES			8		12	Bit
Conversion clock	f_{AD}			1		32	MHz
Overall error Notes 1, 2, 3, 4	AINL	12-bit resolution	4.5 V ≤ AV_{REFP} = V_{DD} ≤ 5.5 V			±7.5	LSB
			2.7 V ≤ AV_{REFP} = V_{DD} ≤ 5.5 V			±9.0	LSB
			2.4 V ≤ AV_{REFP} = V_{DD} ≤ 5.5 V			±9.0	LSB
Conversion time Note 5	t_{CONV}	12-bit resolution	4.5 V ≤ AV_{REFP} = V_{DD} ≤ 5.5 V	2.0			μs
			2.7 V ≤ AV_{REFP} = V_{DD} ≤ 5.5 V	2.0			μs
			2.4 V ≤ AV_{REFP} = V_{DD} ≤ 5.5 V	2.0			μs
Zero-scale error Notes 1, 2, 3, 4, 6	E_{ZS}	12-bit resolution	4.5 V ≤ AV_{REFP} = V_{DD} ≤ 5.5 V			±0.17	%FSR
			2.7 V ≤ AV_{REFP} = V_{DD} ≤ 5.5 V			±0.21	%FSR
			2.4 V ≤ AV_{REFP} = V_{DD} ≤ 5.5 V			±0.21	%FSR
Full-scale error Notes 1, 2, 3, 4, 6	E_{FS}	12-bit resolution	4.5 V ≤ AV_{REFP} = V_{DD} ≤ 5.5 V			±0.17	%FSR
			2.7 V ≤ AV_{REFP} = V_{DD} ≤ 5.5 V			±0.21	%FSR
			2.4 V ≤ AV_{REFP} = V_{DD} ≤ 5.5 V			±0.21	%FSR
Integral linearity error Notes 1, 3, 4	ILE	12-bit resolution	4.5 V ≤ AV_{REFP} = V_{DD} ≤ 5.5 V			±3.0	LSB
			2.7 V ≤ AV_{REFP} = V_{DD} ≤ 5.5 V			±3.0	LSB
			2.4 V ≤ AV_{REFP} = V_{DD} ≤ 5.5 V			±3.0	LSB
Differential linearity error Note 1	DLE	12-bit resolution	4.5 V ≤ AV_{REFP} = V_{DD} ≤ 5.5 V		±1.0		LSB
			2.7 V ≤ AV_{REFP} = V_{DD} ≤ 5.5 V		±1.0		LSB
			2.4 V ≤ AV_{REFP} = V_{DD} ≤ 5.5 V		±1.0		LSB
Analog input voltage	V_{AIN}			0		AV_{REFP}	V

Note 1. This value does not include the quantization error (±1/2 LSB).

<R> **Note 2.** When pins ANI16 to ANI26 are selected as the target pins for conversion or the TSCAP voltage of the CTSU is to be A/D converted, the maximum values are as follows.
Overall error: Add ±3 LSB to the maximum value.
Zero-scale/full-scale error: Add ±0.04%FSR to the maximum value.

Note 3. When reference voltage (+) = V_{DD} and reference voltage (-) = V_{SS}, the maximum values are as follows.
Overall error: Add ±10 LSB to the maximum value.
Zero-scale/full-scale error: Add ±0.25%FSR to the maximum value.
Integral linearity error: Add ±4 LSB to the maximum value.

Note 4. When AV_{REFP} < V_{DD}, the maximum values are as follows.
Overall error/zero-scale error/full-scale error: Add (±0.75 LSB × (V_{DD} voltage (V) - AV_{REFP} voltage (V)) to the maximum value.
Integral linearity error: Add (±0.2 LSB × (V_{DD} voltage (V) - AV_{REFP} voltage (V)) to the maximum value.

Note 5. When the internal reference voltage or the temperature sensor output voltage is selected as the target for conversion, the sampling time must be at least 5 μs. Accordingly, use standard mode 2 with the longer sampling time.

Note 6. This value is indicated as a ratio (%FSR) to the full-scale value.

Downloaded from Arrow.com.

2. Low-voltage modes 1 and 2

(T_A = -40 to +105°C, 1.6 V ≤ AV_{REFP} ≤ V_{DD} ≤ 5.5 V, V_{SS} = 0 V,
reference voltage (+) = AV_{REFP} (ADREFP1 = 0, ADREFP0 = 1), reference voltage (-) = AV_{REFM} (ADREFM = 1),
target pins ANI2 to ANI14, internal reference voltage[Note 1], and temperature sensor output voltage[Note 1])

Item	Symbol	Conditions		Min.	Typ.	Max.	Unit
Resolution	RES			8		12	Bit
Conversion clock	f_{AD}			1		24	MHz
Overall error[Notes 2, 3, 4, 5]	AINL	12-bit resolution	2.7 V ≤ AV_{REFP} = V_{DD} ≤ 5.5 V			±9	LSB
			2.4 V ≤ AV_{REFP} = V_{DD} ≤ 5.5 V			±9	LSB
			1.8 V ≤ AV_{REFP} = V_{DD} ≤ 5.5 V			±11.5	LSB
			1.6 V ≤ AV_{REFP} = V_{DD} ≤ 5.5 V			±12.0	LSB
Conversion time[Note 6]	t_{CONV}	12-bit resolution	2.7 V ≤ AV_{REFP} = V_{DD} ≤ 5.5 V	3.33			μs
			2.4 V ≤ AV_{REFP} = V_{DD} ≤ 5.5 V	5.0			μs
			1.8 V ≤ AV_{REFP} = V_{DD} ≤ 5.5 V	10.0			μs
			1.6 V ≤ AV_{REFP} = V_{DD} ≤ 5.5 V	20.0			μs
Zero-scale error[Notes 2, 3, 4, 5, 7]	E_{ZS}	12-bit resolution	2.7 V ≤ AV_{REFP} = V_{DD} ≤ 5.5 V			±0.21	%FSR
			2.4 V ≤ AV_{REFP} = V_{DD} ≤ 5.5 V			±0.21	%FSR
			1.8 V ≤ AV_{REFP} = V_{DD} ≤ 5.5 V			±0.27	%FSR
			1.6 V ≤ AV_{REFP} = V_{DD} ≤ 5.5 V			±0.28	%FSR
Full-scale error[Notes 2, 3, 4, 5, 7]	E_{FS}	12-bit resolution	2.7 V ≤ AV_{REFP} = V_{DD} ≤ 5.5 V			±0.21	%FSR
			2.4 V ≤ AV_{REFP} = V_{DD} ≤ 5.5 V			±0.21	%FSR
			1.8 V ≤ AV_{REFP} = V_{DD} ≤ 5.5 V			±0.27	%FSR
			1.6 V ≤ AV_{REFP} = V_{DD} ≤ 5.5 V			±0.28	%FSR
Integral linearity error[Notes 2, 4, 5]	ILE	12-bit resolution	2.7 V ≤ AV_{REFP} = V_{DD} ≤ 5.5 V			±4.0	LSB
			2.4 V ≤ AV_{REFP} = V_{DD} ≤ 5.5 V			±4.0	LSB
			1.8 V ≤ AV_{REFP} = V_{DD} ≤ 5.5 V			±4.5	LSB
			1.6 V ≤ AV_{REFP} = V_{DD} ≤ 5.5 V			±4.5	LSB
Differential linearity error[Note 2]	DLE	12-bit resolution	2.7 V ≤ AV_{REFP} = V_{DD} ≤ 5.5 V		±1.5		LSB
			2.4 V ≤ AV_{REFP} = V_{DD} ≤ 5.5 V		±1.5		LSB
			1.8 V ≤ AV_{REFP} = V_{DD} ≤ 5.5 V		±2.0		LSB
			1.6 V ≤ AV_{REFP} = V_{DD} ≤ 5.5 V		±2.0		LSB
Analog input voltage	V_{AIN}			0		AV_{REFP}	V

<R> **Note 1.** If the internal reference voltage, temperature sensor output voltage, or TSCAP voltage of the CTSU is to be A/D converted, V_{DD} must be at least 1.8 V.

Note 2. This value does not include the quantization error (±1/2 LSB).

<R> **Note 3.** When pins ANI16 to ANI26 are selected as the target pins for conversion or the TSCAP voltage of the CTSU is to be A/D converted, the maximum values are as follows.
Overall error: Add ±3 LSB to the maximum value.
Zero-scale/full-scale error: Add ±0.04%FSR to the maximum value.

Note 4. When reference voltage (+) = V_{DD} and reference voltage (-) = V_{SS}, the maximum values are as follows.
Overall error: Add ±10 LSB to the maximum value.
Zero-scale/full-scale error: Add ±0.25%FSR to the maximum value.
Integral linearity error: Add ±4 LSB to the maximum value.

Note 5. When AV_{REFP} < V_{DD}, the maximum values are as follows.
Overall error/zero-scale error/full-scale error: Add (±0.75 LSB × (V_{DD} voltage (V) - AV_{REFP} voltage (V)) to the maximum value.
Integral linearity error: Add (±0.2 LSB × (V_{DD} voltage (V) - AV_{REFP} voltage (V)) to the maximum value.

Downloaded from Arrow.com.

Note 6. When the internal reference voltage or the temperature sensor output voltage is selected as the target for conversion, the sampling time must be at least 5 μs. Accordingly, use standard mode 2 with the longer sampling time, and use the conversion clock (f_{AD}) of no more than 16 MHz.

Note 7. This value is indicated as a ratio (%FSR) to the full-scale value.

Downloaded from Arrow.com.

3. When the internal reference voltage is selected as reference voltage (+)

(T_A = -40 to +105°C, 1.8 V ≤ V_{DD} ≤ 5.5 V, V_{SS} = 0 V, low-voltage modes 1 and 2,
reference voltage (+) = internal reference voltage (ADREFP1 = 1, ADREFP0 = 0),
reference voltage (-) = AV_{REFM} (ADREFM = 1)

Item	Symbol	Conditions	Min.	Typ.	Max.	Unit
Resolution	RES			8		Bit
Conversion clock	f_{AD}	1.6 V ≤ V_{DD} ≤ 5.5 V	1		2	MHz
Zero-scale error**Notes 1, 2, 3**	E_{ZS}	1.6 V ≤ V_{DD} ≤ 5.5 V			±0.6	%FSR
Integral linearity error**Notes 1, 3**	ILE	1.6 V ≤ V_{DD} ≤ 5.5 V			±2.0	LSB
Differential linearity error**Note 1**	DLE	1.6 V ≤ V_{DD} ≤ 5.5 V		±1.0		LSB
Analog input voltage	V_{AIN}		0		V_{BGR} **Note 4**	V

Note 1. This value does not include the quantization error (±1/2 LSB).

Note 2. This value is indicated as a ratio (%FSR) to the full-scale value.

Note 3. When reference voltage (-) is selected as V_{SS}, the maximum values are as follows.
Zero-scale error: Add ±0.35%FSR to the maximum value.
Integral linearity error: Add ±0.5 LSB to the maximum value.

Note 4. Refer to **2.6.2 Temperature sensor/internal reference voltage characteristics**.

Downloaded from Arrow.com.

2.6.2 Temperature sensor/internal reference voltage characteristics

(T_A = -40 to +105°C, 1.8 V ≤ V_{DD} ≤ 5.5 V, V_{SS} = 0 V)

Item	Symbol	Conditions	Min.	Typ.	Max.	Unit
Temperature sensor output voltage	V_{TMPS25}	Setting ADS register = 80H, T_A = +25°C		1.05		V
Internal reference voltage	V_{BGR}	Setting ADS register = 81H	1.42	1.48	1.54	V
Temperature coefficient	F_{VTMPS}	Temperature dependency of the temperature sensor voltage		-3.3		mV/°C
Operation stabilization wait time	t_{AMP}		5			μs

2.6.3 D/A converter characteristics

(T_A = -40 to +105°C, 1.6 V ≤ EV_{DD0} = EV_{DD1} ≤ V_{DD} ≤ 5.5 V, V_{SS} = EV_{SS0} = EV_{SS1} = 0 V)

Item	Symbol	Conditions		Min.	Typ.	Max.	Unit
Resolution	RES					8	Bit
Overall error	AINL	Rload = 8 MΩ	1.8 V ≤ V_{DD} ≤ 5.5 V			±2.5	LSB
		Rload = 4 MΩ	1.8 V ≤ V_{DD} ≤ 5.5 V			±2.5	LSB
Settling time	t_{SET}	Cload = 20 pF	2.7 V ≤ V_{DD} ≤ 5.5 V			3	μs
			1.6 V ≤ V_{DD} ≤ 5.5 V			6	μs

2.6.4 Comparator characteristics

(T_A = -40 to +105°C, 1.6 V ≤ EV_{DD0} = EV_{DD1} ≤ V_{DD} ≤ 5.5 V, V_{SS} = EV_{SS0} = EV_{SS1} = 0 V)

Item	Symbol	Conditions		Min.	Typ.	Max.	Unit
Input voltage range	I_{VREF}	Input to the IVREF0 and IVREF1 pins C0LVL = 0, C1LVL = 0		0		V_{DD} - 1.4 and EV_{DD0}	V
		Input to the IVREF0 and IVREF1 pins C0LVL = 1, C1LVL = 1		1.4		EV_{DD0}	V
	I_{VCMP}	Input to the IVCMP0 and IVCMP1 pins		-0.3		EV_{DD0} + 0.3	V
Output delay	td	V_{DD} = 3.0 V, Input slew rate > 1 V/μs	High-speed mode			1.5	μs
			Low-speed mode		3.0		μs
Offset voltage	—	High-speed mode				50	mV
		Low-speed mode				40	mV
Operation stabilization wait time	t_{CMP}			30			μs
Internal reference voltage[Note]	V_{BGR2}			1.4		1.6	V

Note The internal reference voltage can be selected as comparator reference voltage only when 1.8 V ≤ V_{DD} ≤ 5.5 V.

Downloaded from Arrow.com.

2.6.5 POR circuit characteristics

(T_A = -40 to +105°C, V_{SS} = 0 V)

Item	Symbol	Conditions	Min.	Typ.	Max.	Unit
Detection voltage	V_{POR}, V_{PDR}		1.43	1.50	1.57	V
Minimum pulse width**Note**	T_{PW}		300			μs

Note This width is the minimum time required for a POR reset when V_{DD} falls below V_{PDR}. This width is also the minimum time required for a POR reset from when V_{DD} falls below 0.7 V to when V_{DD} exceeds V_{POR} in the STOP mode or while the main system clock is stopped through setting bit 0 (HIOSTOP) and bit 7 (MSTOP) in the clock operation status control register (CSC).

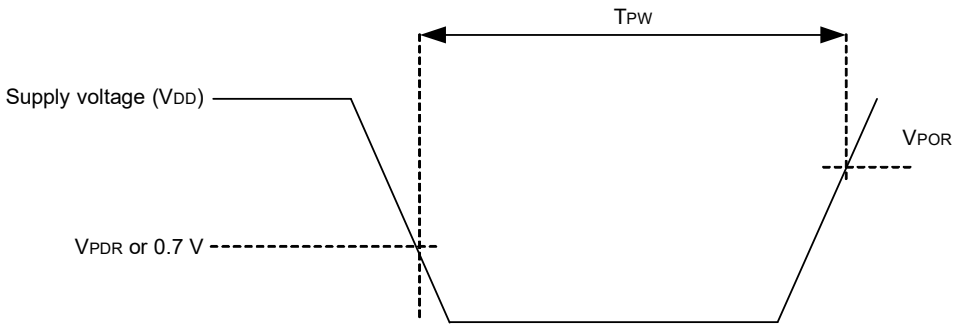

Downloaded from Arrow.com.

2.6.6 LVD circuit characteristics

1. LVD0 Detection Voltage in the Reset Mode and Interrupt Mode

(T_A = -40 to +105°C, $V_{PDR} \leq V_{DD} \leq$ 5.5 V, V_{SS} = 0 V)

Item		Symbol	Conditions	Min.	Typ.	Max.	Unit
Detection voltage	Supply voltage level	V_{LVD00}	The power supply voltage is rising.	3.84	3.96	4.08	V
			The power supply voltage is falling.	3.76	3.88	4.00	V
		V_{LVD01}	The power supply voltage is rising.	2.88	2.97	3.06	V
			The power supply voltage is falling.	2.82	2.91	3.00	V
		V_{LVD02}	The power supply voltage is rising.	2.59	2.67	2.75	V
			The power supply voltage is falling.	2.54	2.62	2.70	V
		V_{LVD03}	The power supply voltage is rising.	2.31	2.38	2.45	V
			The power supply voltage is falling.	2.26	2.33	2.40	V
		V_{LVD04}	The power supply voltage is rising.	1.84	1.90	1.95	V
			The power supply voltage is falling.	1.80	1.86	1.91	V
		V_{LVD05}	The power supply voltage is rising.	1.64	1.69	1.74	V
			The power supply voltage is falling.	1.60	1.65	1.70	V
Minimum pulse width		t_{LW}		500			μs
Detection delay time						500	μs

Downloaded from Arrow.com.

2. LVD1 Detection Voltage of Reset Mode and Interrupt Mode

(T_A = -40 to +105°C, $V_{PDR} \le V_{DD} \le$ 5.5 V, V_{SS} = 0 V)

Item		Symbol	Conditions	Min.	Typ.	Max.	Unit
Detection voltage	Supply voltage level	V_{LVD10}	The power supply voltage is rising.	4.08	4.16	4.24	V
			The power supply voltage is falling.	4.00	4.08	4.16	V
		V_{LVD11}	The power supply voltage is rising.	3.88	3.96	4.04	V
			The power supply voltage is falling.	3.80	3.88	3.96	V
		V_{LVD12}	The power supply voltage is rising.	3.68	3.75	3.82	V
			The power supply voltage is falling.	3.60	3.67	3.74	V
		V_{LVD13}	The power supply voltage is rising.	3.48	3.55	3.62	V
			The power supply voltage is falling.	3.40	3.47	3.54	V
		V_{LVD14}	The power supply voltage is rising.	3.28	3.35	3.42	V
			The power supply voltage is falling.	3.20	3.27	3.34	V
		V_{LVD15}	The power supply voltage is rising.	3.07	3.13	3.19	V
			The power supply voltage is falling.	3.00	3.06	3.12	V
		V_{LVD16}	The power supply voltage is rising.	2.91	2.97	3.03	V
			The power supply voltage is falling.	2.85	2.91	2.97	V
		V_{LVD17}	The power supply voltage is rising.	2.76	2.82	2.87	V
			The power supply voltage is falling.	2.70	2.76	2.81	V
		V_{LVD18}	The power supply voltage is rising.	2.61	2.66	2.71	V
			The power supply voltage is falling.	2.55	2.60	2.65	V
		V_{LVD19}	The power supply voltage is rising.	2.45	2.50	2.55	V
			The power supply voltage is falling.	2.40	2.45	2.50	V
		V_{LVD110}	The power supply voltage is rising.	2.35	2.40	2.45	V
			The power supply voltage is falling.	2.30	2.35	2.40	V
		V_{LVD111}	The power supply voltage is rising.	2.25	2.30	2.34	V
			The power supply voltage is falling.	2.20	2.25	2.29	V
		V_{LVD112}	The power supply voltage is rising.	2.15	2.20	2.24	V
			The power supply voltage is falling.	2.10	2.15	2.19	V
		V_{LVD113}	The power supply voltage is rising.	2.05	2.09	2.13	V
			The power supply voltage is falling.	2.00	2.04	2.08	V
		V_{LVD114}	The power supply voltage is rising.	1.94	1.98	2.02	V
			The power supply voltage is falling.	1.90	1.94	1.98	V
		V_{LVD115} **Note**	The power supply voltage is rising.	1.84	1.88	1.91	V
			The power supply voltage is falling.	1.80	1.84	1.87	V
		V_{LVD116} **Note**	The power supply voltage is rising.	1.74	1.78	1.81	V
			The power supply voltage is falling.	1.70	1.74	1.77	V
		V_{LVD117} **Note**	The power supply voltage is rising.	1.64	1.67	1.70	V
			The power supply voltage is falling.	1.60	1.63	1.66	V
Minimum pulse width		t_{LW}		500			μs
Detection delay time						500	μs

Note This setting can only be used when LVD0 is disabled.

Downloaded from Arrow.com.

2.6.7 Power supply voltage rising slope characteristics

(T_A = -40 to +105°C, V_{SS} = 0 V)

Item	Symbol	Conditions	Min.	Typ.	Max.	Unit
Power supply voltage rising slope	S_{VDD}				54	V/ms

Caution Make sure to keep the internal reset state by the LVD0 circuit or an external reset until V_{DD} reaches the operating voltage range shown in AC characteristics.

Downloaded from Arrow.com.

2.7 RAM Data Retention Characteristics

(T_A = -40 to +105°C, V_{SS} = 0V)

Item	Symbol	Conditions	Min.	Typ.	Max.	Unit
Data retention supply voltage	V_{DDDR}		1.43 Note		5.5	V

Note This voltage depends on the POR detection voltage. When the voltage drops, the data in RAM are retained until a POR is applied, but are not retained following a POR.

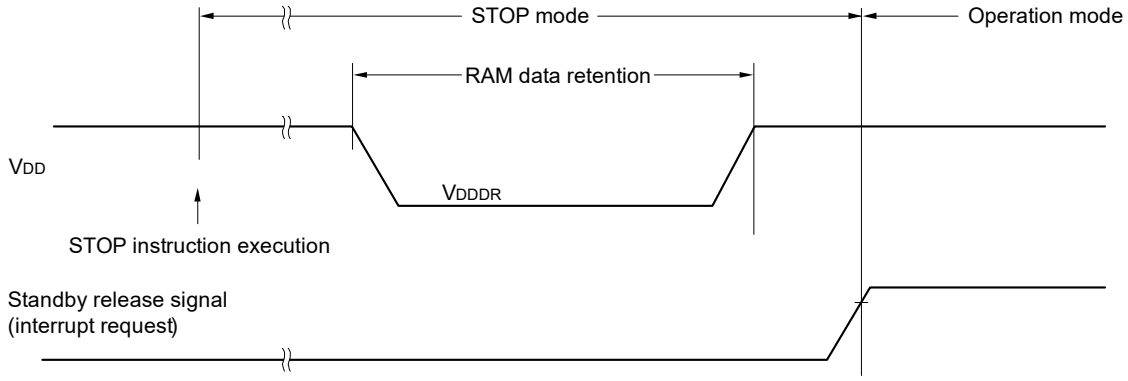

2.8 Flash Memory Programming Characteristics

(T_A = -40 to +105°C, 1.6 V ≤ V_{DD} ≤ 5.5 V, V_{SS} = 0 V)

Item	Symbol	Conditions	Min.	Typ.	Max.	Unit
CPU/peripheral hardware clock frequency	f_{CLK}		1		32	MHz
Number of code flash memory rewrites Notes 1, 2, 3	C_{erwr}	Retained for 20 years T_A = +85°C	1,000			Times
Number of data flash memory rewrites Notes 1, 2, 3		Retained for 1 year T_A = +25°C		1,000,000		
		Retained for 5 years T_A = +85°C	100,000			
		Retained for 20 years T_A = +85°C	10,000			

Note 1. 1 erase + 1 write after the erase is regarded as 1 rewrite. The retaining years are until next rewrite after the rewrite.

Note 2. The listed numbers of times apply when using flash memory programmer and Renesas Electronics self programming library.

Note 3. These are the characteristics of the flash memory and the results obtained from reliability testing by Renesas Electronics Corporation.

Downloaded from Arrow.com.

1. Code flash memory

(T_A = -40 to +105°C, 1.6 V ≤ V_{DD} ≤ 5.5 V, V_{SS} = 0 V)

Item		Symbol	f_{CLK} = 1 MHz			f_{CLK} = 2 MHz, 3 MHz			4 MHz ≤ f_{CLK} < 8 MHz			8 MHz ≤ f_{CLK} < 32 MHz			f_{CLK} = 32 MHz			Unit
			Min.	Typ.	Max.	Min.	Typ.	Max.	Min.	Typ.	Max.	Min.	Typ.	Max.	Min.	Typ.	Max.	
Programming time	4 bytes	t_{P4}	—	74.7	656.5	—	51.0	464.6	—	41.7	384.8	—	37.1	346.2	—	34.2	321.9	μs
Erasure time	2 Kbytes	t_{E2K}	—	10.4	312.2	—	7.7	258.5	—	6.4	231.8	—	5.8	218.4	—	5.6	214.4	ms
Blank checking time	4 bytes	t_{BC4}	—	—	38.4	—	—	19.2	—	—	13.1	—	—	10.2	—	—	8.3	μs
	2 Kbytes	t_{BC2K}	—	—	2618.9	—	—	1309.5	—	—	658.3	—	—	332.8	—	—	234.1	μs
Time taken to forcibly stop the erasure		t_{SED}	—	—	18.0	—	—	14.0	—	—	12.0	—	—	11.0	—	—	10.3	μs
Security setting time		t_{AWSSAS}	—	18.2	526.2	—	14.4	469.2	—	12.5	441.1	—	11.6	427.1	—	11.3	422.6	ms
Time until programming starts following cancellation of the STOP instruction		—	20	—	—	20	—	—	20	—	—	20	—	—	20	—	—	μs

Caution The listed values do not include the time until the operations of the flash memory start following execution of an instruction by software.

2. Data flash memory

(T_A = -40 to +105°C, 1.6 V ≤ V_{DD} ≤ 5.5 V, V_{SS} = 0 V)

Item		Symbol	f_{CLK} = 1 MHz			f_{CLK} = 2 MHz, 3 MHz			4 MHz ≤ f_{CLK} < 8 MHz			8 MHz ≤ f_{CLK} < 32 MHz			f_{CLK} = 32 MHz			Unit
			Min.	Typ.	Max.	Min.	Typ.	Max.	Min.	Typ.	Max.	Min.	Typ.	Max.	Min.	Typ.	Max.	
Programming time	1 byte	t_{P4}	—	74.7	656.5	—	51.0	464.6	—	41.7	384.8	—	37.1	346.2	—	34.2	321.9	μs
Erasure time	256 bytes	t_{E2K}	—	7.8	259.2	—	6.4	232.0	—	5.8	218.5	—	5.5	211.8	—	5.4	209.7	ms
Blank checking time	1 byte	t_{BC4}	—	—	38.4	—	—	19.2	—	—	13.1	—	—	10.2	—	—	8.3	μs
	256 bytes	t_{BC2K}	—	—	1326.1	—	—	663.1	—	—	335.1	—	—	171.2	—	—	121.0	μs
Time taken to forcibly stop the erasure		t_{SED}	—	—	18.0	—	—	14.0	—	—	12.0	—	—	11.0	—	—	10.3	μs
Time until programming starts following cancellation of the STOP instruction		—	20	—	—	20	—	—	20	—	—	20	—	—	20	—	—	μs
Time until reading starts following setting DFLCTL.DFLEN to 1		—	0.25	—	—	0.25	—	—	0.25	—	—	0.25	—	—	0.25	—	—	μs

Caution The listed values do not include the time until the operations of the flash memory start following execution of an instruction by software.

Downloaded from Arrow.com.

2.9 Dedicated Flash Memory Programmer Communication (UART)

(T_A = -40 to +105°C, 1.8 V ≤ EV_{DD0} = EV_{DD1} ≤ V_{DD} ≤ 5.5 V, V_{SS} = EV_{SS0} = EV_{SS1} = 0 V)

Item	Symbol	Conditions	Min.	Typ.	Max.	Unit
Transfer rate		During serial programming	115,200		1,000,000	bps

2.10 Timing of Entry to Flash Memory Programming Modes

(T_A = -40 to +105°C, 1.8 V ≤ EV_{DD0} = EV_{DD1} ≤ V_{DD} ≤ 5.5 V, V_{SS} = EV_{SS0} = EV_{SS1} = 0 V)

Item	Symbol	Conditions	Min.	Typ.	Max.	Unit
Time to complete the communication for the initial setting after the external reset is released	t_{SUINIT}	POR and LVD reset must be released before the external reset is released.			100	ms
Time to release the external reset after the TOOL0 pin is set to the low level	t_{SU}	POR and LVD reset must be released before the external reset is released.	10			μs
Time to hold the TOOL0 pin at the low level after the external reset is released (the processing time of the firmware to control the flash memory is not included)	t_{HD}	POR and LVD reset must be released before the external reset is released.	1			ms

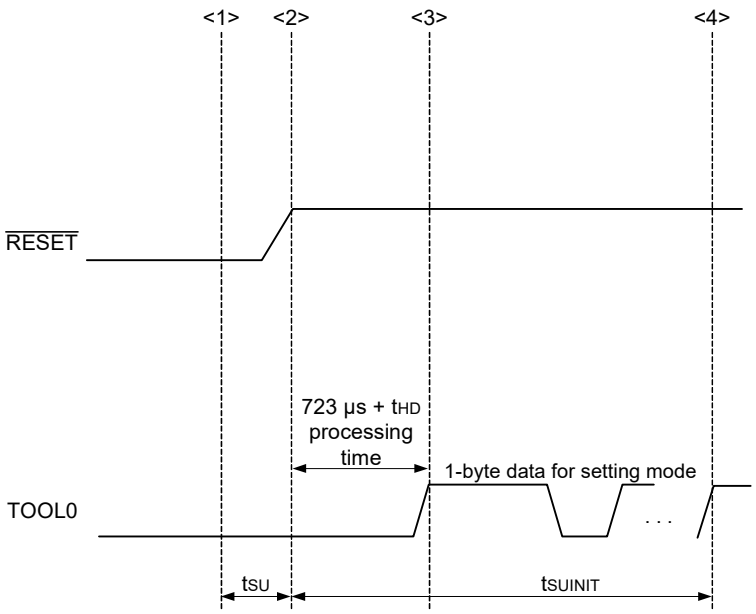

<1> The low level is input to the TOOL0 pin.
<2> The external reset is released. Note that the POR and LVD reset must be released before the external reset is released.
<3> The TOOL0 pin is set to the high level.
<4> Setting of the flash memory programming mode by UART reception and complete the baud rate setting.

Remark t_{SUINIT} : The time during which the communications for the initial setting must be completed within 100 ms after the external reset is released.
t_{SU} : Time to release the external reset after the TOOL0 pin is set to the low level
t_{HD} : Time to hold the TOOL0 pin at the low level after the external reset is released. It does not include the processing time of the firmware to control the flash memory.

Downloaded from Arrow.com.

3. Package Drawings

3.1 30-pin Products

JEITA Package Code	RENESAS Code	Previous Code	MASS (TYP.) [g]
P-LSSOP30-0300-0.65	PLSP0030JB-B	S30MC-65-5A4-3	0.18

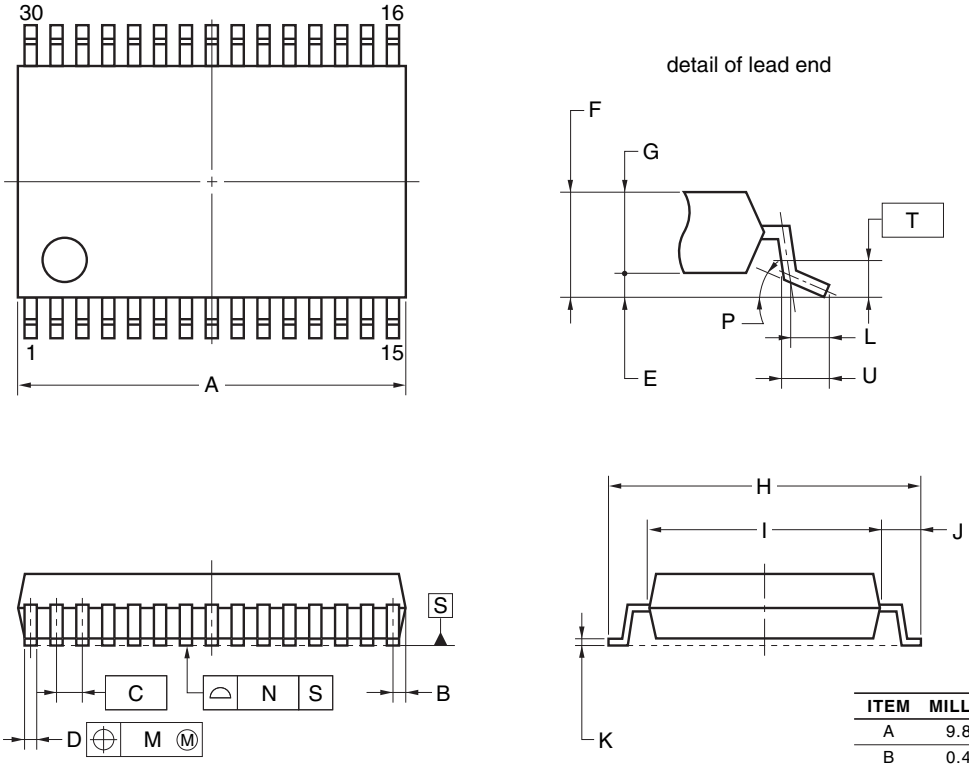

NOTE
Each lead centerline is located within 0.13 mm of its true position (T.P.) at maximum material condition.

ITEM	MILLIMETERS
A	9.85±0.15
B	0.45 MAX.
C	0.65 (T.P.)
D	$0.24^{+0.08}_{-0.07}$
E	0.1±0.05
F	1.3±0.1
G	1.2
H	8.1±0.2
I	6.1±0.2
J	1.0±0.2
K	0.17±0.03
L	0.5
M	0.13
N	0.10
P	$3^{\circ}{}^{+5^{\circ}}_{-3^{\circ}}$
T	0.25
U	0.6±0.15

©2012 Renesas Electronics Corporation. All rights reserved.

Downloaded from Arrow.com.

3.2 32-pin Products

JEITA Package code	RENESAS code	MASS(TYP.)[g]
P-HWQFN032-5x5-0.50	PWQN0032KE-A	0.06

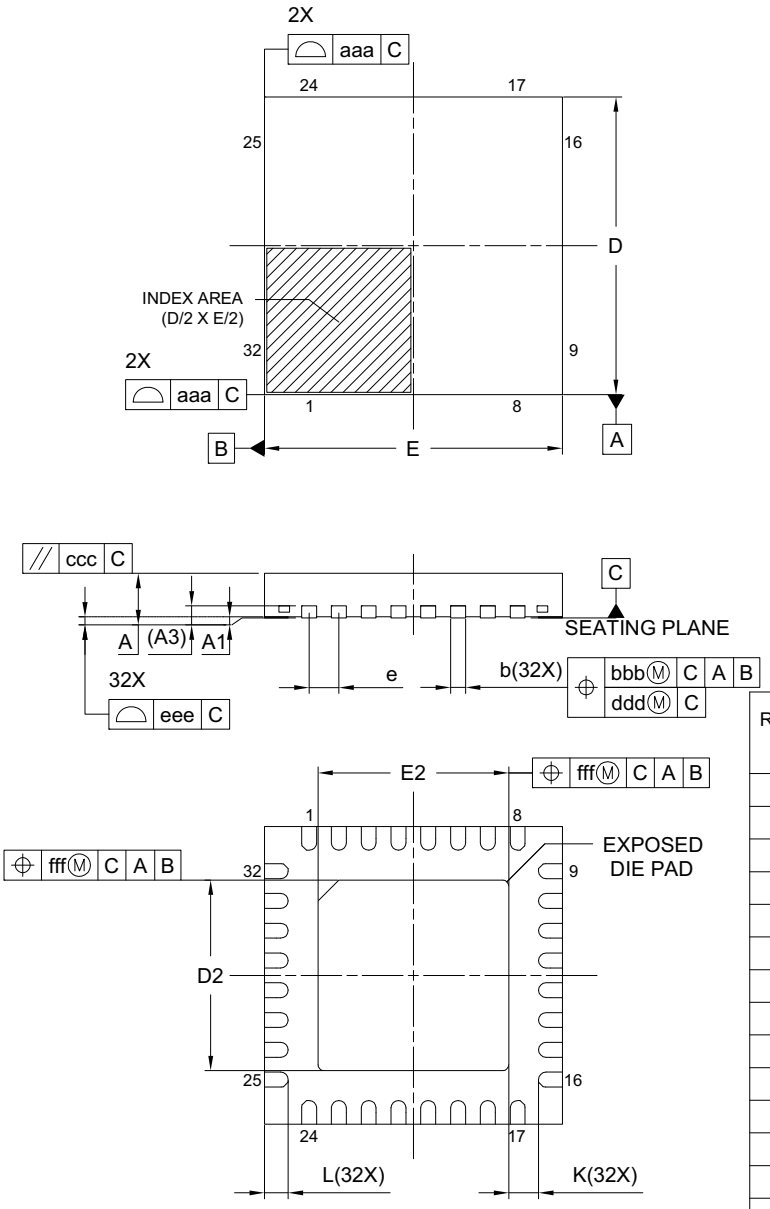

Reference Symbol	Dimension in Millimeters		
	Min.	Nom.	Max.
A	—	—	0.80
A_1	0.00	0.02	0.05
A_3	0.203 REF.		
b	0.18	0.25	0.30
D	5.00 BSC		
E	5.00 BSC		
e	0.50 BSC		
L	0.35	0.40	0.45
K	0.20	—	—
D_2	3.15	3.20	3.25
E_2	3.15	3.20	3.25
aaa	0.15		
bbb	0.10		
ccc	0.10		
ddd	0.05		
eee	0.08		
fff	0.10		

Downloaded from Arrow.com.

JEITA Package Code	RENESAS Code	Previous Code	MASS (TYP.) [g]
P-LQFP32-7x7-0.80	PLQP0032GB-A	P32GA-80-GBT-1	0.2

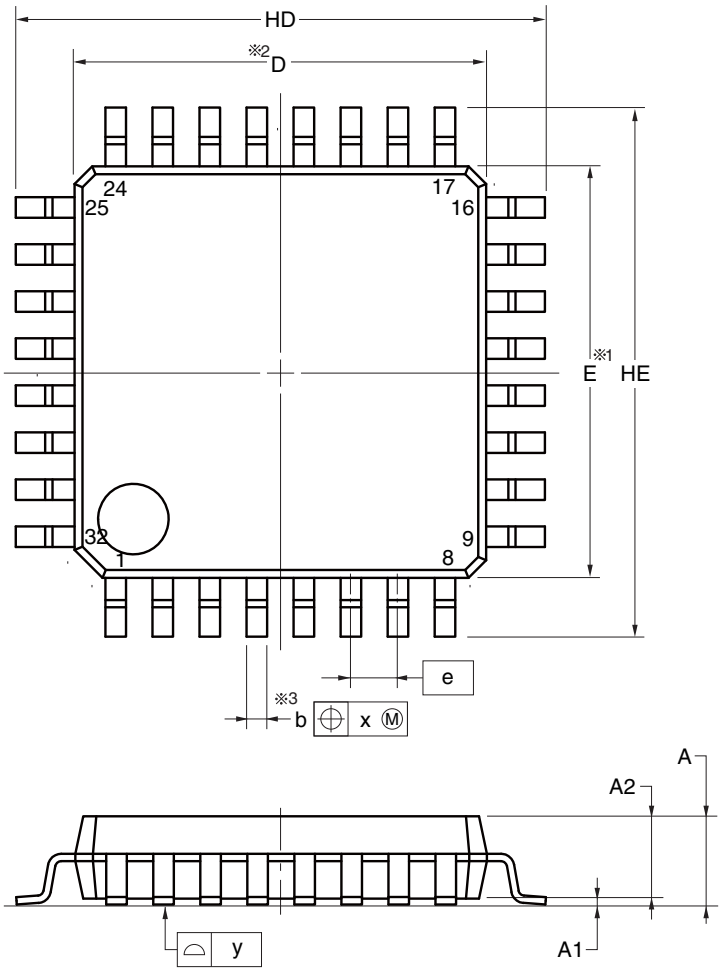

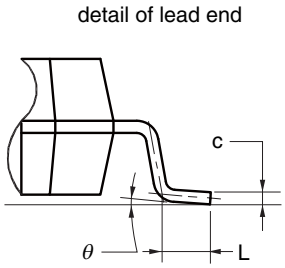

(UNIT:mm)

ITEM	DIMENSIONS
D	7.00±0.10
E	7.00±0.10
HD	9.00±0.20
HE	9.00±0.20
A	1.70 MAX.
A1	0.10±0.10
A2	1.40
b	0.37±0.05
c	0.145±0.055
L	0.50±0.20
θ	0° to 8°
e	0.80
x	0.20
y	0.10

NOTE

1.Dimensions "※1" and "※2" do not include mold flash.

2.Dimension "※3" does not include trim offset.

© 2012 Renesas Electronics Corporation. All rights reserved.

Downloaded from Arrow.com.

JEITA Package code	RENESAS code	MASS(TYP.)[g]
P-LQFP32-7x7-0.80	PLQP0032GE-A	0.18

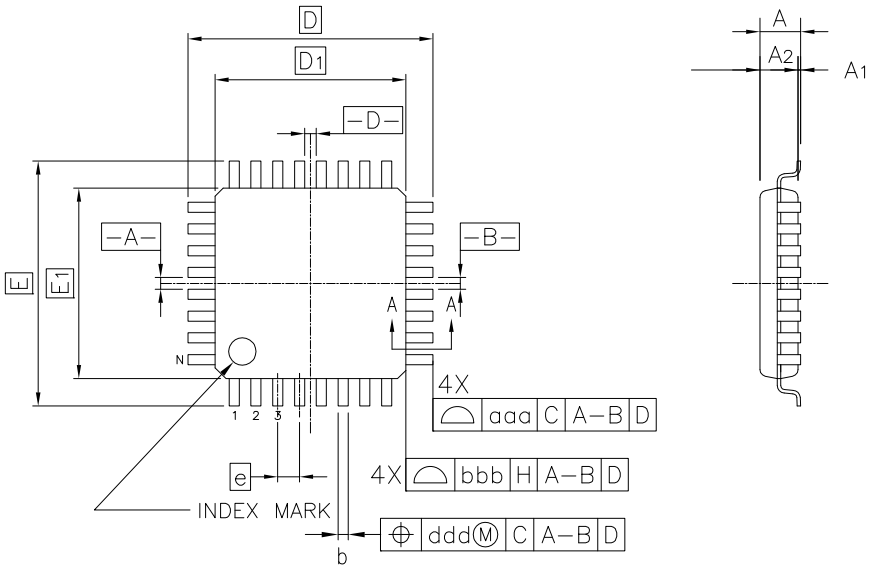

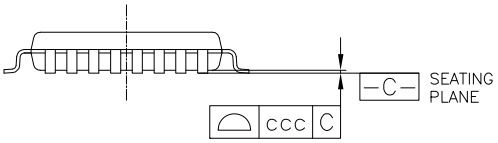

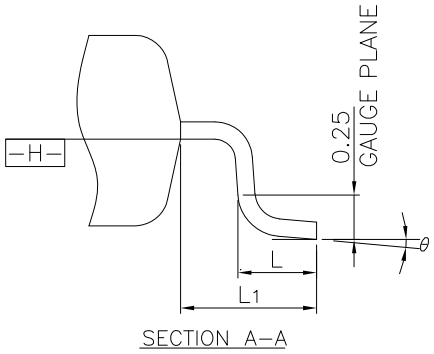

Reference Symbol	Dimension in Millimeters		
	Min.	Nom.	Max.
A	–	–	1.60
A_1	0.05	–	0.15
A_2	1.35	1.40	1.45
D	–	9.00	–
D_1	–	7.00	–
E	–	9.00	–
E_1	–	7.00	–
N	–	32	–
e	–	0.80	–
b	0.30	0.37	0.45
c	0.09	–	0.20
θ	0°	3.5°	7°
L	0.45	0.60	0.75
L_1	–	1.00	–
aaa	–	–	0.20
bbb	–	–	0.20
ccc	–	–	0.10
ddd	–	–	0.20

Downloaded from Arrow.com.

3.3 36-pin Products

JEITA Package Code	RENESAS Code	MASS(Typ.)[g]
P-WFLGA36-4×4-0.50	PWLG0036KB-A	0.02

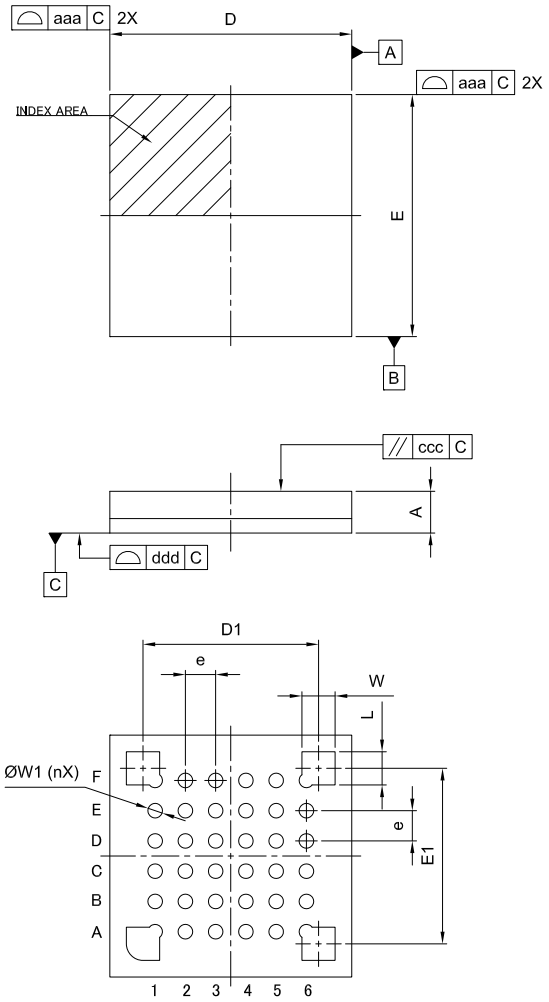

Reference Symbol	Dimension in Millimeters		
	Min.	Nom.	Max.
D	—	4.00	—
E	—	4.00	—
D1	2.90 BSC		
E1	2.90 BSC		
A	—	—	0.76
W1	0.19	0.24	0.29
W	—	0.55	—
L	—	0.55	—
e	0.50 BSC		
aaa	0.10		
ccc	0.20		
ddd	0.08		
n	—	36	—

Downloaded from Arrow.com.

3.4 40-pin Products

JEITA Package code	RENESAS code	MASS (TYP.)[g]
P-HWQFN040-6x6-0.50	PWQN0040KD-A	0.08

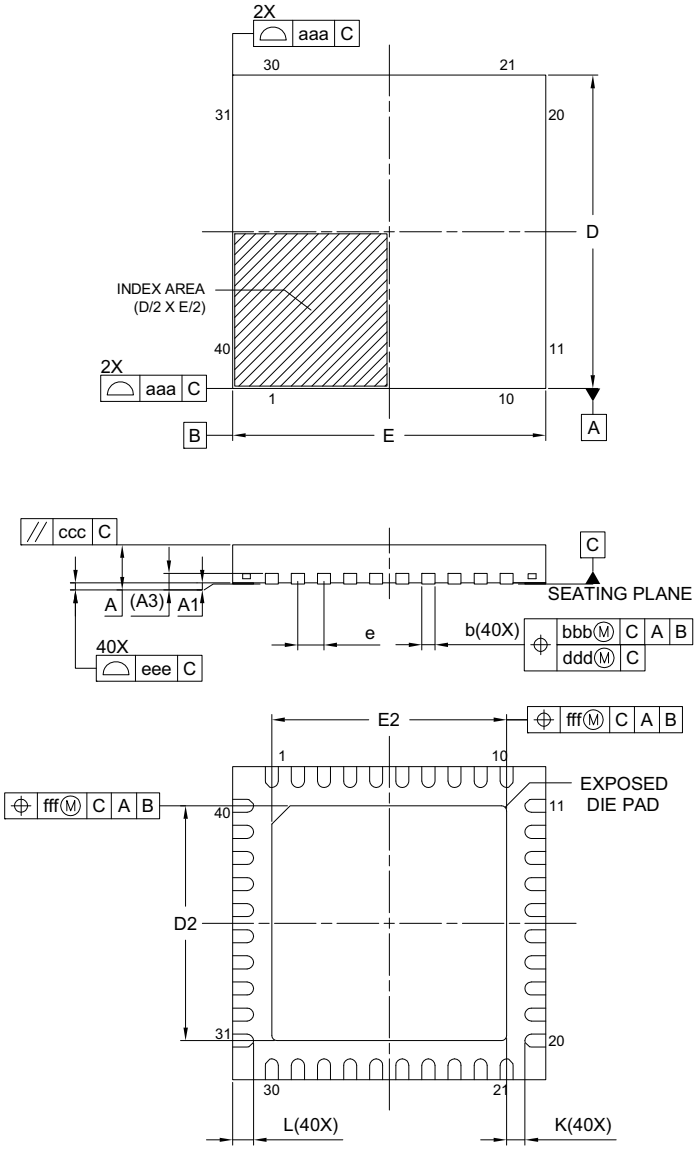

Reference Symbol	Dimension in Millimeters		
	Min.	Nom.	Max.
A	—	—	0.80
A_1	0.00	0.02	0.05
A_3	0.203 REF.		
b	0.18	0.25	0.30
D	6.00 BSC		
E	6.00 BSC		
e	0.50 BSC		
L	0.30	0.40	0.50
K	0.20	—	—
D_2	4.45	4.50	4.55
E_2	4.45	4.50	4.55
aaa	0.15		
bbb	0.10		
ccc	0.10		
ddd	0.05		
eee	0.08		
fff	0.10		

Downloaded from Arrow.com.

3.5 44-pin Products

JEITA Package Code	RENESAS Code	Previous Code	MASS (TYP.) [g]
P-LQFP44-10x10-0.80	PLQP0044GC-A	P44GB-80-UES-2	0.36

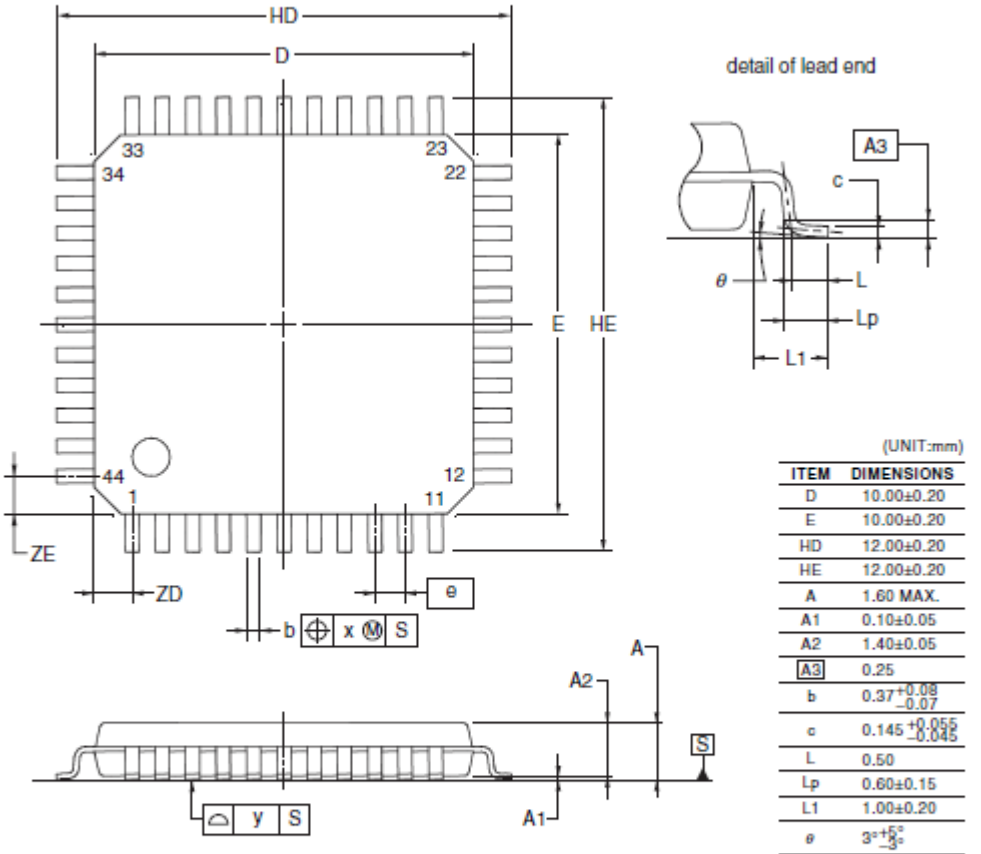

(UNIT:mm)

ITEM	DIMENSIONS
D	10.00±0.20
E	10.00±0.20
HD	12.00±0.20
HE	12.00±0.20
A	1.60 MAX.
A1	0.10±0.05
A2	1.40±0.05
A3	0.25
b	$0.37^{+0.08}_{-0.07}$
c	$0.145^{+0.055}_{-0.045}$
L	0.50
Lp	0.60±0.15
L1	1.00±0.20
θ	$3°^{+5°}_{-3°}$
e	0.80
x	0.20
y	0.10
ZD	1.00
ZE	1.00

NOTE
Each lead centerline is located within 0.20 mm of its true position at maximum material condition.

©2012 Renesas Electronics Corporation. All rights reserved.

Downloaded from Arrow.com.

JEITA Package code	RENESAS code	MASS(TYP.)[g]
P-LQFP044-10x10-0.80	PLQP0044GE-A	0.34

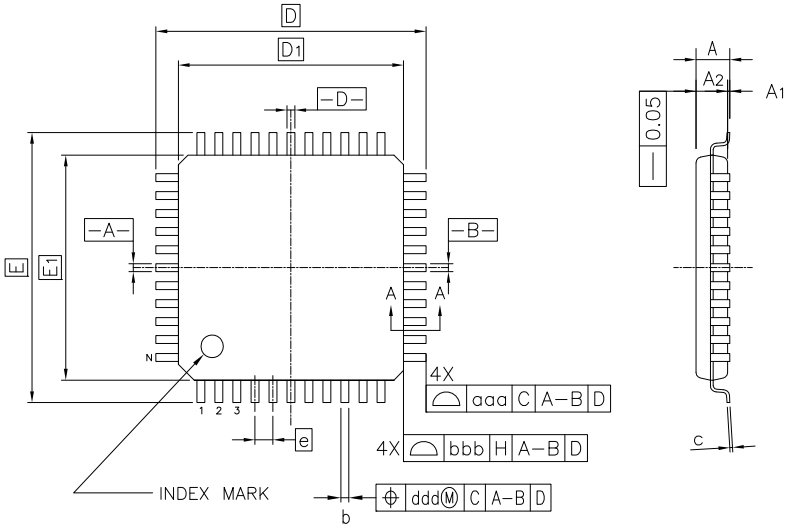

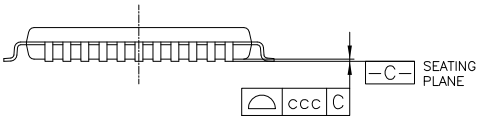

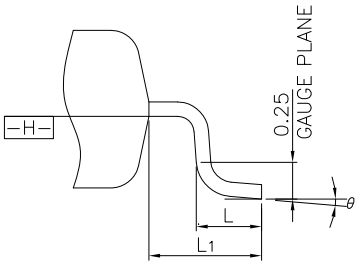

SECTION A–A

Reference Symbol	Dimension in Millimeters		
	Min.	Nom.	Max.
A	–	–	1.60
A_1	0.05	–	0.15
A_2	1.35	1.40	1.45
D	–	12.00	–
D_1	–	10.00	–
E	–	12.00	–
E_1	–	10.00	–
N	–	44	–
e	–	0.80	–
b	0.30	0.37	0.45
c	0.09	–	0.20
θ	0°	3.5°	7°
L	0.45	0.60	0.75
L_1	–	1.00	–
aaa	–	–	0.20
bbb	–	–	0.20
ccc	–	–	0.10
ddd	–	–	0.20

Downloaded from Arrow.com.

3.6 48-pin Products

JEITA Package Code	RENESAS Code	Previous Code	MASS[Typ.]
P-LFQFP48-7x7-0.50	PLQP0048KB-B	——	0.2g

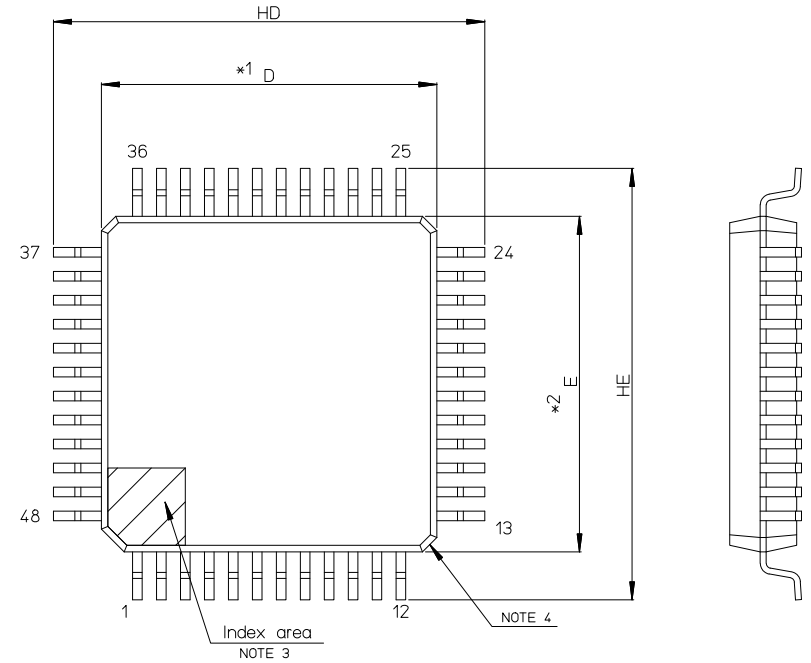

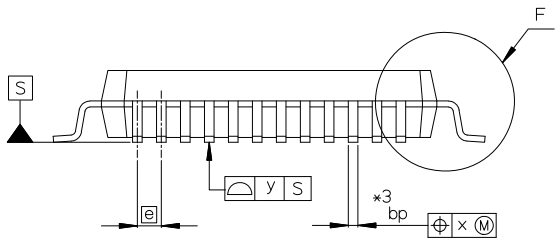

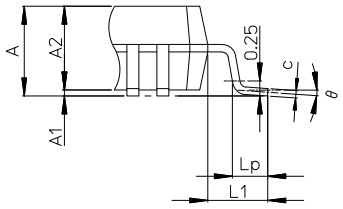

Detail F

NOTE)
1. DIMENSIONS "*1" AND "*2" DO NOT INCLUDE MOLD FLASH.
2. DIMENSION "*3" DOES NOT INCLUDE TRIM OFFSET.
3. PIN 1 VISUAL INDEX FEATURE MAY VARY, BUT MUST BE LOCATED WITHIN THE HATCHED AREA.
4. CHAMFERS AT CORNERS ARE OPTIONAL; SIZE MAY VARY.

Reference Symbol	Dimension in Millimeters		
	Min	Nom	Max
D	6.9	7.0	7.1
E	6.9	7.0	7.1
A2	——	1.4	——
HD	8.8	9.0	9.2
HE	8.8	9.0	9.2
A	——	——	1.7
A1	0.05	——	0.15
bp	0.17	0.20	0.27
c	0.09	——	0.20
θ	0°	3.5°	8°
e	——	0.5	——
x	——	——	0.08
y	——	——	0.08
Lp	0.45	0.6	0.75
L1	——	1.0	——

Downloaded from Arrow.com.

JEITA Package code	RENESAS code	MASS(TYP.)[g]
P-LFQFP48-7x7-0.50	PLQP0048KL-A	0.18

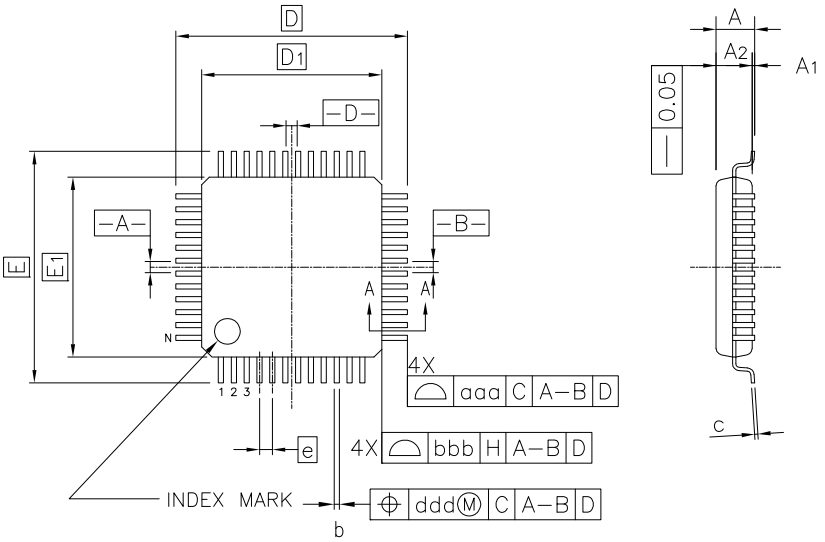

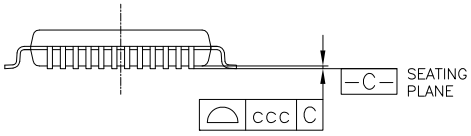

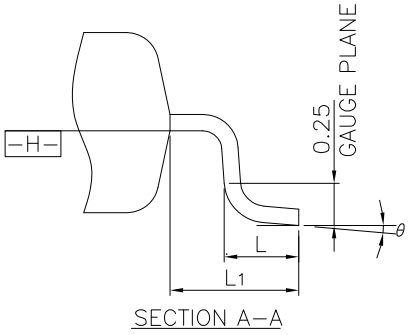

Reference Symbol	Dimension in Millimeters		
	Min.	Nom.	Max.
A	–	–	1.60
A_1	0.05	–	0.15
A_2	1.35	1.40	1.45
D	–	9.00	–
D_1	–	7.00	–
E	–	9.00	–
E_1	–	7.00	–
N	–	48	–
e	–	0.50	–
b	0.17	0.22	0.27
c	0.09	–	0.20
θ	0°	3.5°	7°
L	0.45	0.60	0.75
L_1	–	1.00	–
aaa	–	–	0.20
bbb	–	–	0.20
ccc	–	–	0.08
ddd	–	–	0.08

Downloaded from Arrow.com.

JEITA Package code	RENESAS code	MASS(TYP.)[g]
P-HWQFN048-7x7-0.50	PWQN0048KC-A	0.13 g

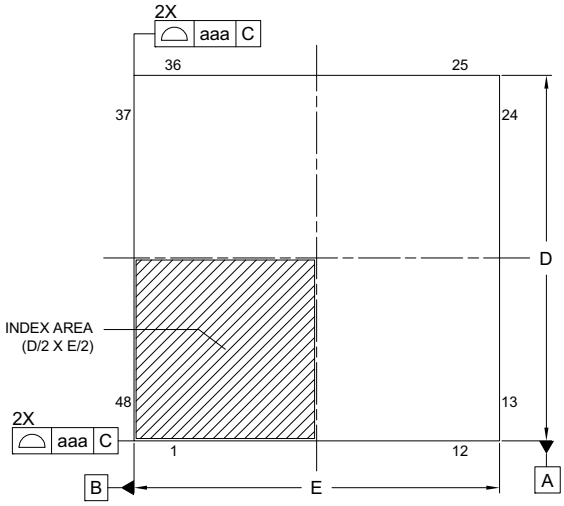

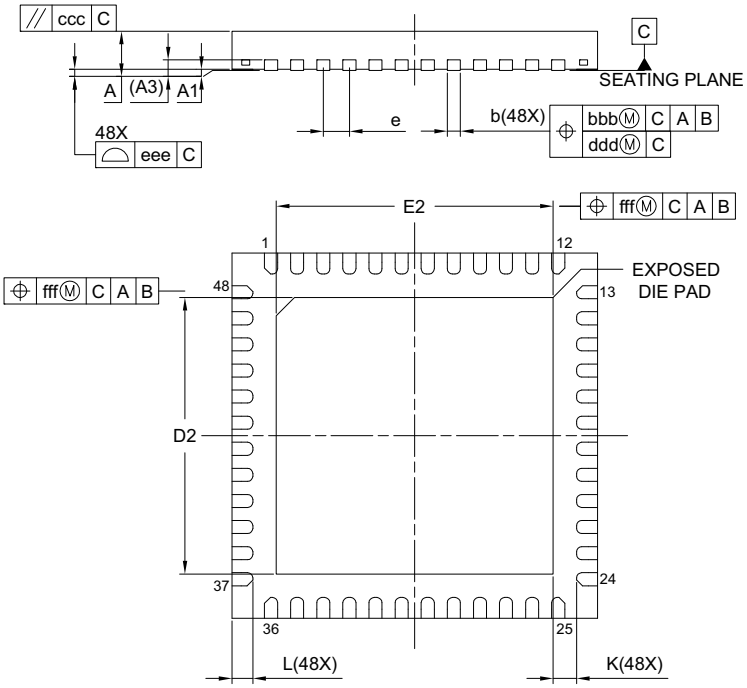

Reference Symbol	Dimension in Millimeters		
	Min.	Nom.	Max.
A	—	—	0.80
A_1	0.00	0.02	0.05
A_3	0.203 REF.		
b	0.20	0.25	0.30
D	7.00 BSC		
E	7.00 BSC		
e	0.50 BSC		
L	0.30	0.40	0.50
K	0.20	—	—
D_2	5.25	5.30	5.35
E_2	5.25	5.30	5.35
aaa	0.15		
bbb	0.10		
ccc	0.10		
ddd	0.05		
eee	0.08		
fff	0.10		

Downloaded from Arrow.com.

3.7 52-pin Products

JEITA Package Code	RENESAS Code	Previous Code	MASS (TYP.) [g]
P-LQFP52-10x10-0.65	PLQP0052JA-A	P52GB-65-GBS-1	0.3

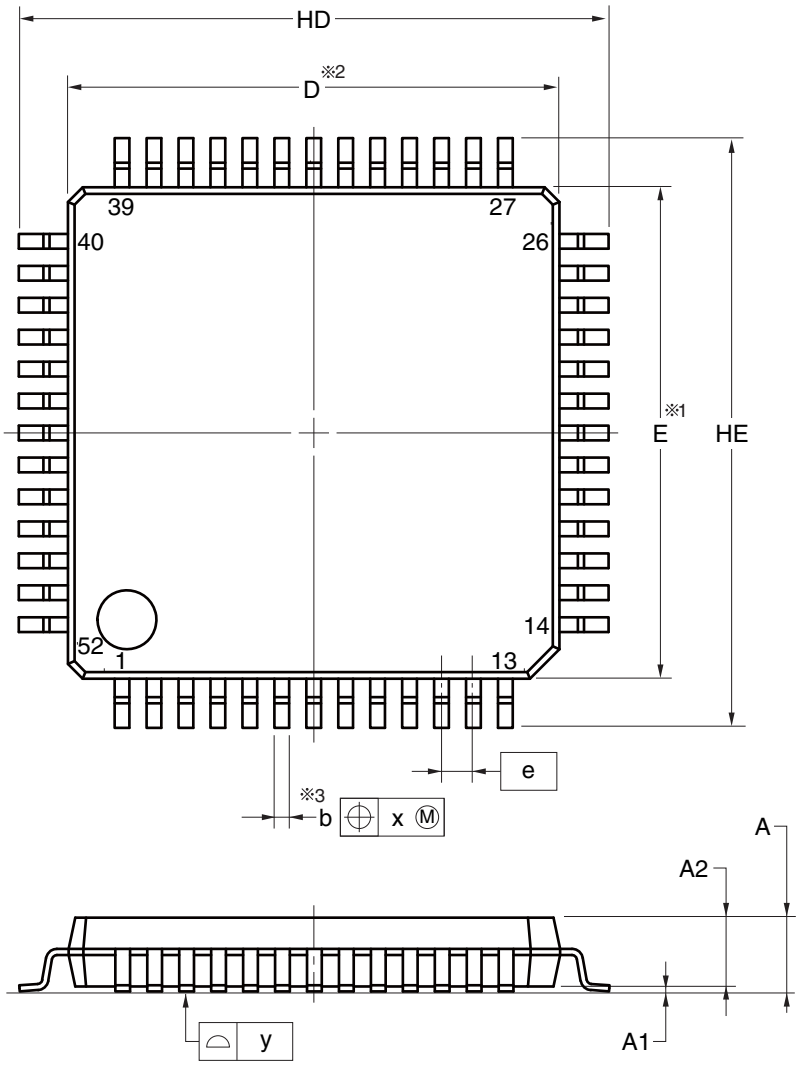

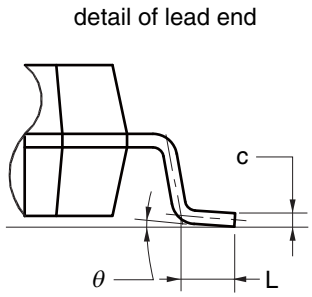

(UNIT:mm)

ITEM	DIMENSIONS
D	10.00±0.10
E	10.00±0.10
HD	12.00±0.20
HE	12.00±0.20
A	1.70 MAX.
A1	0.10±0.05
A2	1.40
b	0.32±0.05
c	0.145±0.055
L	0.50±0.15
θ	0° to 8°
e	0.65
x	0.13
y	0.10

NOTE

1.Dimensions "※1" and "※2" do not include mold flash.

2.Dimension "※3" does not include trim offset.

© 2012 Renesas Electronics Corporation. All rights reserved.

Downloaded from Arrow.com.

3.8 64-pin Products

JEITA Package Code	RENESAS Code	Previous Code	MASS (TYP.) [g]
P-LQFP64-12x12-0.65	PLQP0064JA-A	P64GK-65-UET-2	0.51

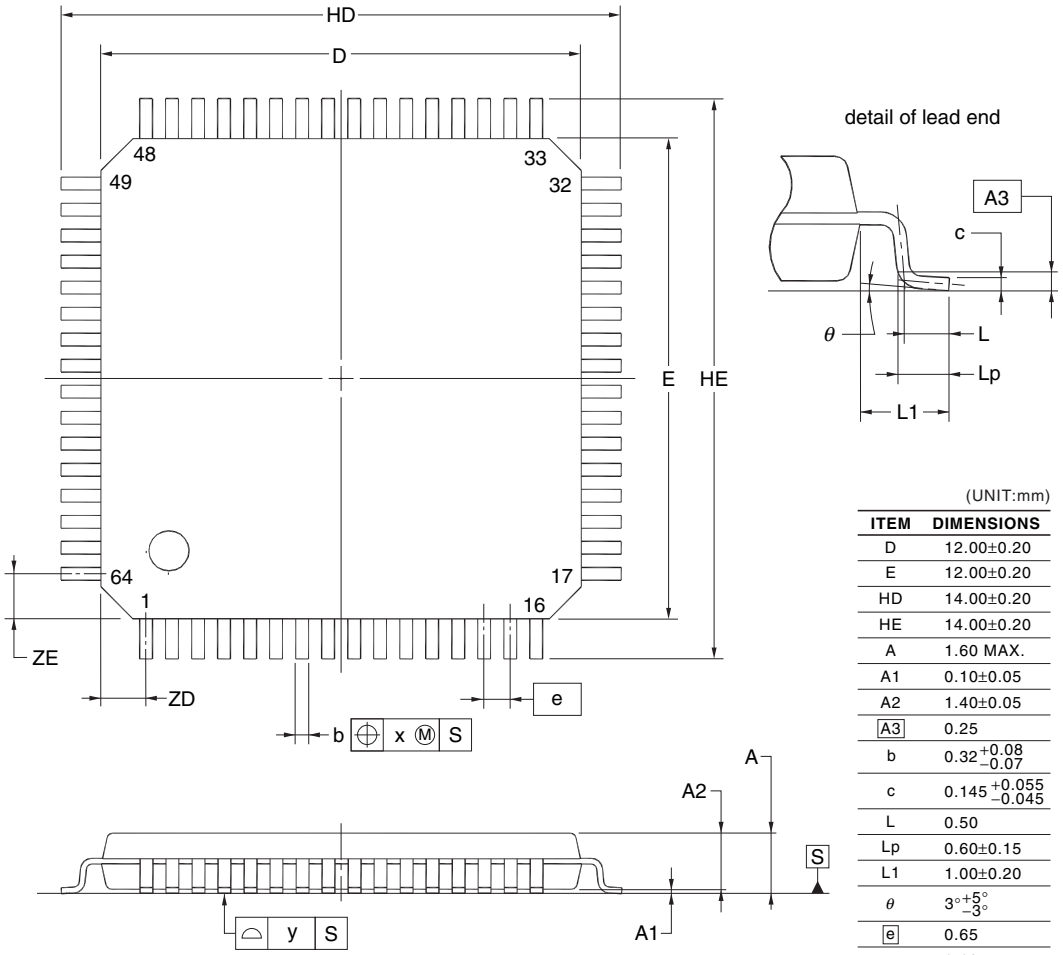

(UNIT:mm)

ITEM	DIMENSIONS
D	12.00±0.20
E	12.00±0.20
HD	14.00±0.20
HE	14.00±0.20
A	1.60 MAX.
A1	0.10±0.05
A2	1.40±0.05
A3	0.25
b	$0.32^{+0.08}_{-0.07}$
c	$0.145^{+0.055}_{-0.045}$
L	0.50
Lp	0.60±0.15
L1	1.00±0.20
θ	$3^{\circ}{}^{+5^{\circ}}_{-3^{\circ}}$
e	0.65
x	0.13
y	0.10
ZD	1.125
ZE	1.125

NOTE
Each lead centerline is located within 0.13 mm of its true position at maximum material condition.

©2012 Renesas Electronics Corporation. All rights reserved.

Downloaded from Arrow.com.

JEITA Package Code	RENESAS Code	Previous Code	MASS (Typ) [g]
P-LFQFP64-10x10-0.50	PLQP0064KB-C	—	0.3

Unit: mm

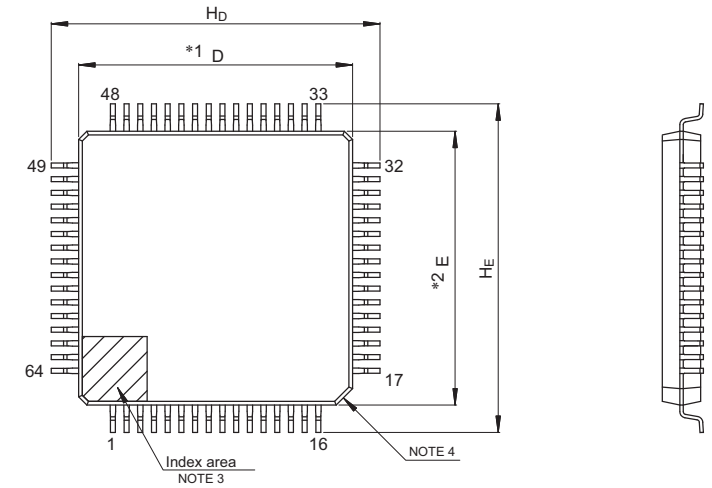

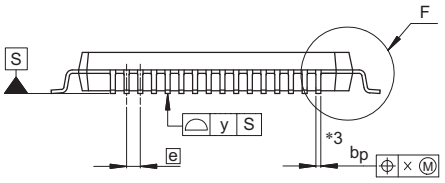

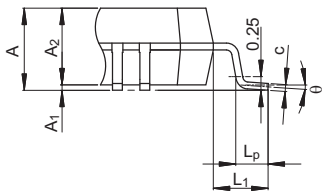

Detail F

NOTE)
1. DIMENSIONS "*1" AND "*2" DO NOT INCLUDE MOLD FLASH.
2. DIMENSION "*3" DOES NOT INCLUDE TRIM OFFSET.
3. PIN 1 VISUAL INDEX FEATURE MAY VARY, BUT MUST BE LOCATED WITHIN THE HATCHED AREA.
4. CHAMFERS AT CORNERS ARE OPTIONAL, SIZE MAY VARY.

Reference Symbol	Dimensions in millimeters		
	Min	Nom	Max
D	9.9	10.0	10.1
E	9.9	10.0	10.1
A_2	—	1.4	—
H_D	11.8	12.0	12.2
H_E	11.8	12.0	12.2
A	—	—	1.7
A_1	0.05	—	0.15
b_p	0.15	0.20	0.27
c	0.09	—	0.20
θ	0°	3.5°	8°
e	—	0.5	—
x	—	—	0.08
y	—	—	0.08
L_p	0.45	0.6	0.75
L_1	—	1.0	—

© 2015 Renesas Electronics Corporation. All rights reserved.

Downloaded from Arrow.com.

JEITA Package code	RENESAS code	MASS(TYP.)[g]
P-LFQFP064-10x10-0.50	PLQP0064KL-A	0.36

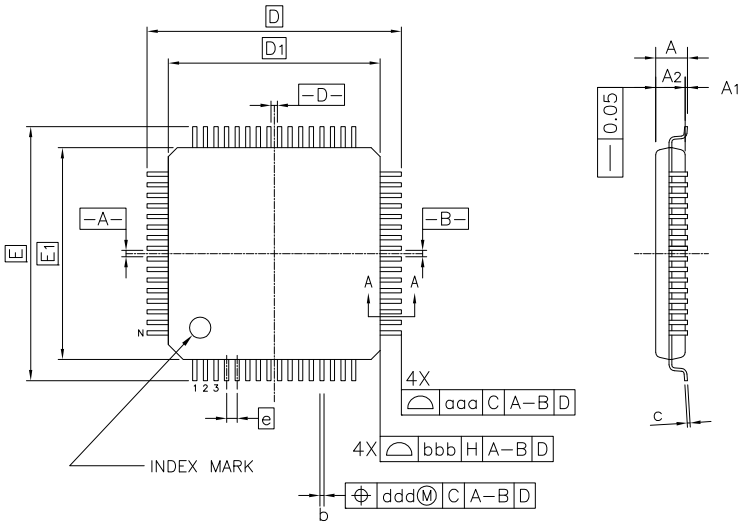

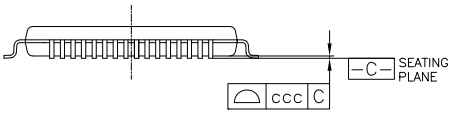

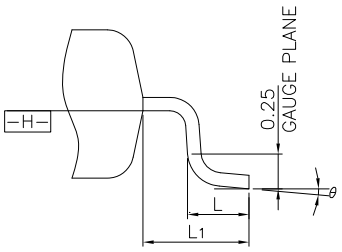

SECTION A–A

Reference Symbol	Dimension in Millimeters		
	Min.	Nom.	Max.
A	–	–	1.60
A_1	0.05	–	0.15
A_2	1.35	1.40	1.45
D	–	12.00	–
D_1	–	10.00	–
E	–	12.00	–
E_1	–	10.00	–
N	–	64	–
e	–	0.50	–
b	0.17	0.22	0.27
c	0.09	–	0.20
θ	0°	3.5°	7°
L	0.45	0.60	0.75
L_1	–	1.00	–
aaa	–	–	0.20
bbb	–	–	0.20
ccc	–	–	0.08
ddd	–	–	0.08

Downloaded from Arrow.com.

JEITA Package code	RENESAS code	MASS(TYP.)[g]
P-WFLGA64-5x5-0.50	PWLG0064KB-A	0.035

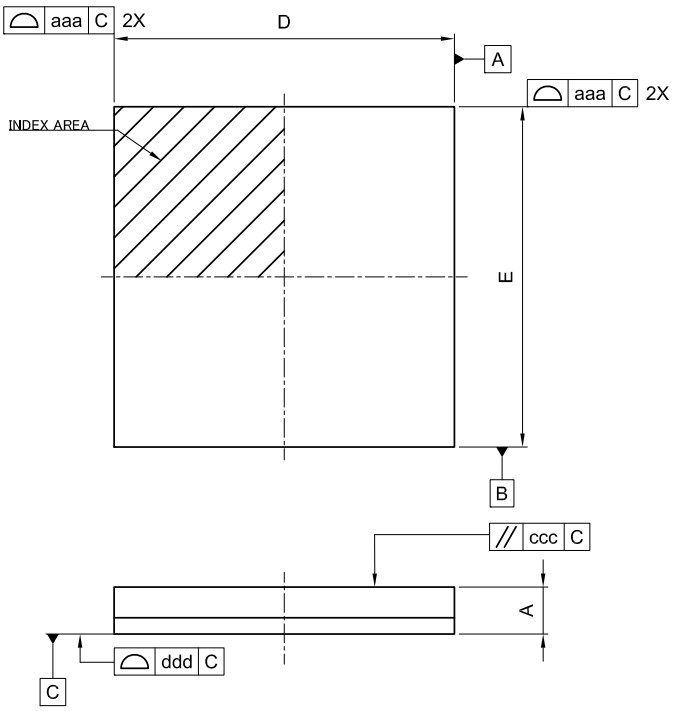

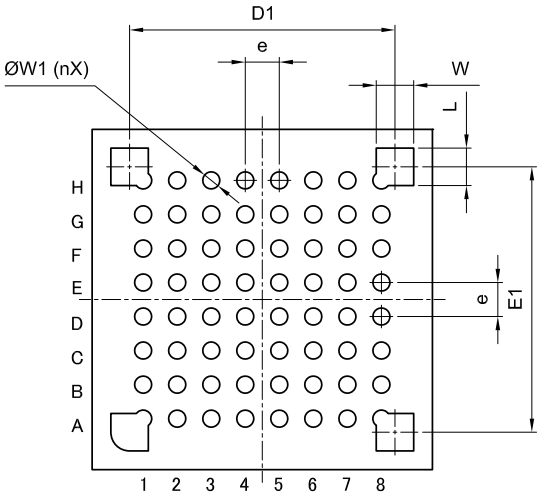

Reference Symbol	Dimension in Millimeters		
	Min.	Nom.	Max.
D	—	5.00	—
E	—	5.00	—
D1	3.90 BSC		
E1	3.90 BSC		
A	—	—	0.76
W1	0.21	0.25	0.29
W	—	0.55	—
L	—	0.55	—
e	0.50 BSC		
aaa	—	—	0.10
ccc	—	—	0.20
ddd	—	—	0.08
n	—	64	—

Downloaded from Arrow.com.

3.9 80-pin Products

JEITA Package Code	RENESAS Code	Previous Code	MASS (Typ) [g]
P-LQFP80-14x14-0.65	PLQP0080JA-B	—	0.6

Unit: mm

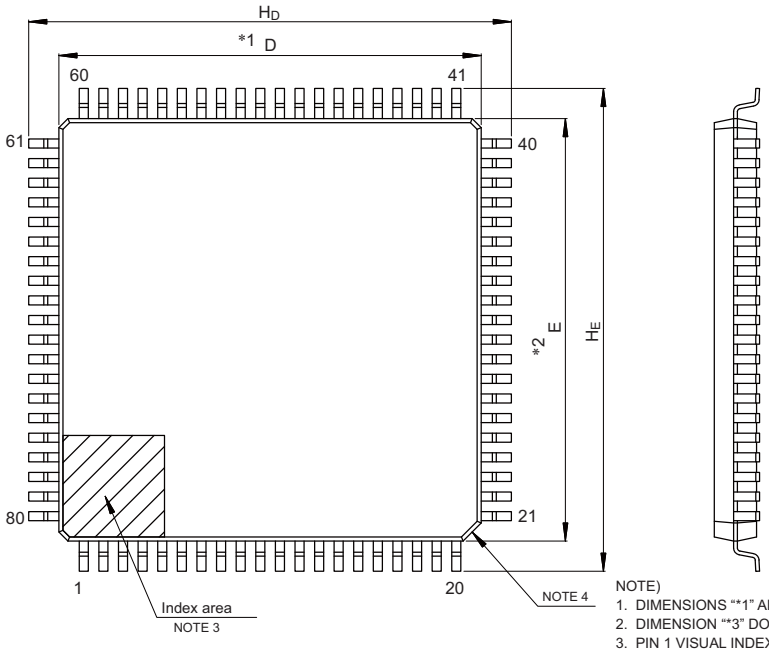

NOTE)
1. DIMENSIONS "*1" AND "*2" DO NOT INCLUDE MOLD FLASH.
2. DIMENSION "*3" DOES NOT INCLUDE TRIM OFFSET.
3. PIN 1 VISUAL INDEX FEATURE MAY VARY, BUT MUST BE LOCATED WITHIN THE HATCHED AREA.
4. CHAMFERS AT CORNERS ARE OPTIONAL, SIZE MAY VARY.

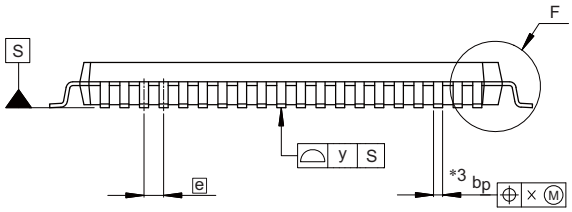

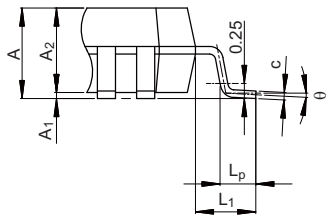

Detail F

Reference Symbol	Dimensions in millimeters		
	Min	Nom	Max
D	13.9	14.0	14.1
E	13.9	14.0	14.1
A_2	—	1.4	—
H_D	15.8	16.0	16.2
H_E	15.8	16.0	16.2
A	—	—	1.7
A_1	0.05	—	0.15
b_p	0.22	0.30	0.38
c	0.09	—	0.20
θ	0°	3.5°	8°
e	—	0.65	—
x	—	—	0.13
y	—	—	0.10
L_p	0.45	0.6	0.75
L_1	—	1.0	—

© 2016 Renesas Electronics Corporation. All rights reserved.

Downloaded from Arrow.com.

JEITA Package Code	RENESAS Code	Previous Code	MASS (Typ) [g]
P-LFQFP80-12x12-0.50	PLQP0080KB-B	—	0.5

Unit: mm

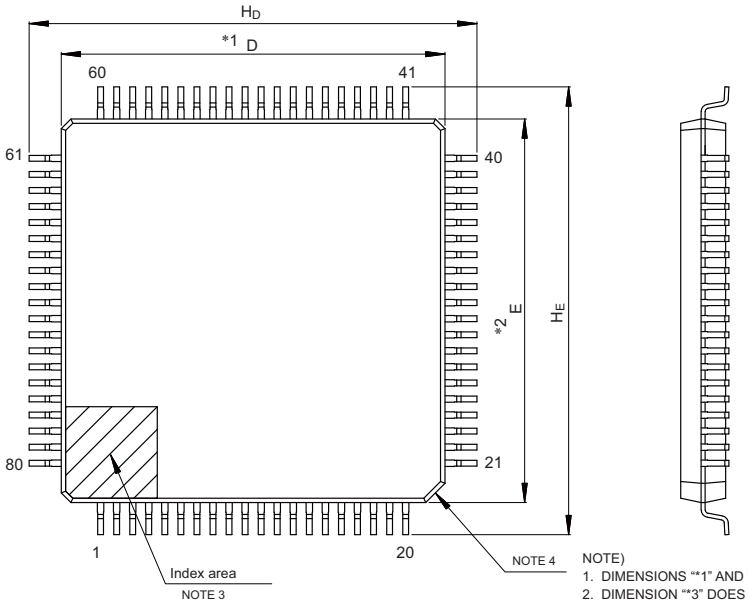

NOTE)
1. DIMENSIONS "*1" AND "*2" DO NOT INCLUDE MOLD FLASH.
2. DIMENSION "*3" DOES NOT INCLUDE TRIM OFFSET.
3. PIN 1 VISUAL INDEX FEATURE MAY VARY, BUT MUST BE LOCATED WITHIN THE HATCHED AREA.
4. CHAMFERS AT CORNERS ARE OPTIONAL, SIZE MAY VARY.

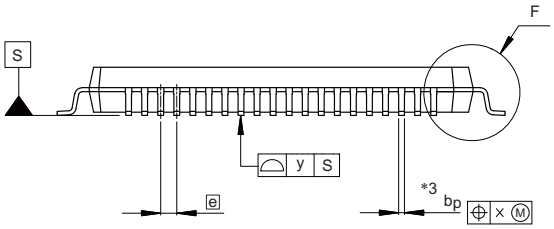

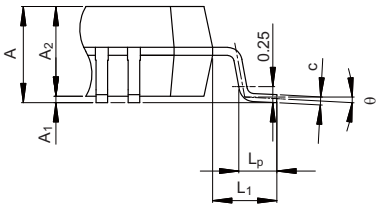

Detail F

Reference Symbol	Dimensions in millimeters		
	Min	Nom	Max
D	11.9	12.0	12.1
E	11.9	12.0	12.1
A_2	—	1.4	—
H_D	13.8	14.0	14.2
H_E	13.8	14.0	14.2
A	—	—	1.7
A_1	0.05	—	0.15
b_p	0.15	0.20	0.27
c	0.09	—	0.20
θ	0°	3.5°	8°
e	—	0.5	—
x	—	—	0.08
y	—	—	0.08
L_p	0.45	0.6	0.75
L_1	—	1.0	—

© 2017 Renesas Electronics Corporation. All rights reserved.

Downloaded from Arrow.com.

<R>

JEITA Package code	RENESAS code	MASS(TYP.)[g]
P-LFQFP80-12x12-0.50	PLQP0080KJ-A	0.49

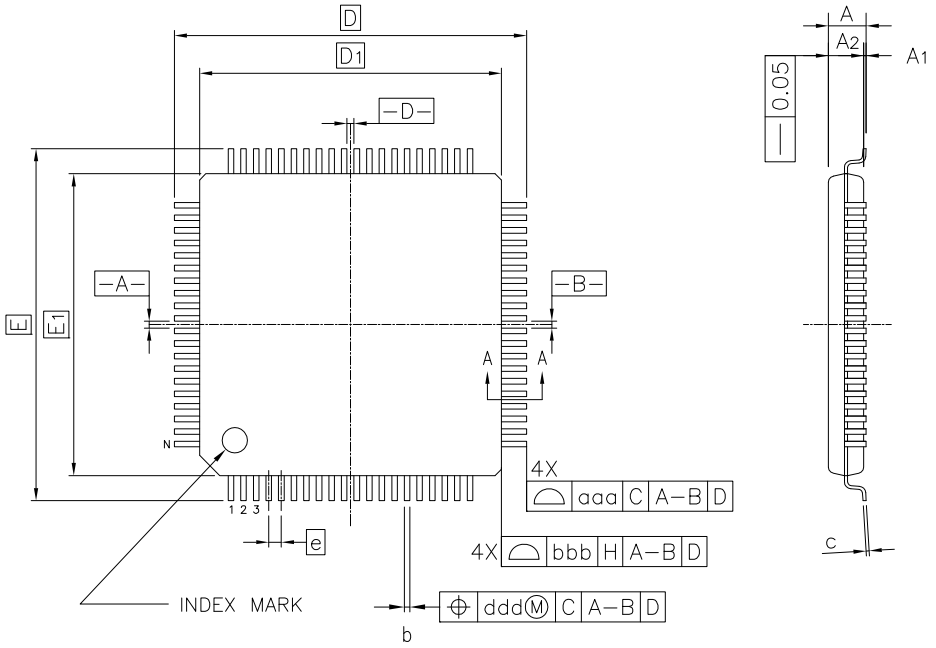

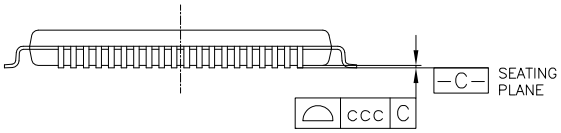

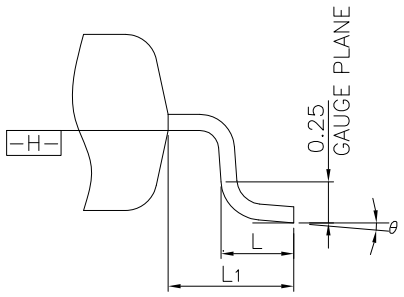

SECTION A–A

Reference Symbol	Dimension in Millimeters		
	Min.	Nom.	Max.
A	–	–	1.60
A_1	0.05	–	0.15
A_2	1.35	1.40	1.45
D	–	14.00	–
D_1	–	12.00	–
E	–	14.00	–
E_1	–	12.00	–
N	–	80	–
e	–	0.50	–
b	0.17	0.22	0.27
c	0.09	–	0.20
θ	0°	3.5°	7°
L	0.45	0.60	0.75
L_1	–	1.00	–
aaa	–	–	0.20
bbb	–	–	0.20
ccc	–	–	0.08
ddd	–	–	0.08

Downloaded from Arrow.com.

3.10 100-pin Products

JEITA Package Code	RENESAS Code	Previous Code	MASS (Typ) [g]
P-LFQFP100-14x14-0.50	PLQP0100KB-B	—	0.6

Unit: mm

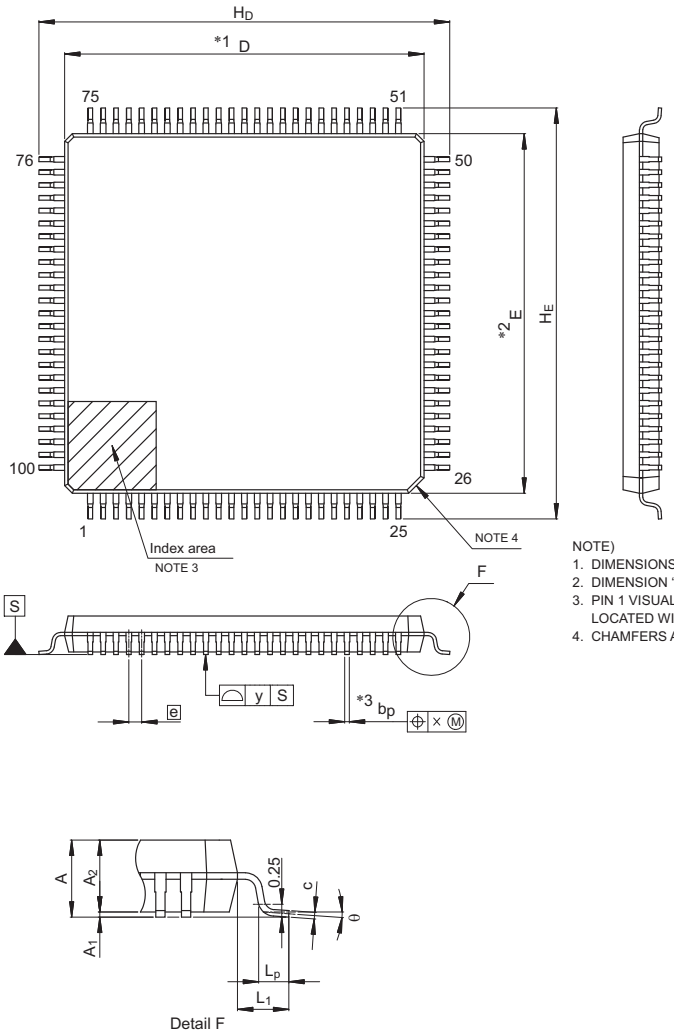

NOTE)
1. DIMENSIONS "*1" AND "*2" DO NOT INCLUDE MOLD FLASH.
2. DIMENSION "*3" DOES NOT INCLUDE TRIM OFFSET.
3. PIN 1 VISUAL INDEX FEATURE MAY VARY, BUT MUST BE LOCATED WITHIN THE HATCHED AREA.
4. CHAMFERS AT CORNERS ARE OPTIONAL, SIZE MAY VARY.

Reference Symbol	Dimensions in millimeters		
	Min	Nom	Max
D	13.9	14.0	14.1
E	13.9	14.0	14.1
A_2	—	1.4	—
H_D	15.8	16.0	16.2
H_E	15.8	16.0	16.2
A	—	—	1.7
A_1	0.05	—	0.15
b_p	0.15	0.20	0.27
c	0.09	—	0.20
θ	0°	3.5°	8°
e	—	0.5	—
x	—	—	0.08
y	—	—	0.08
L_p	0.45	0.6	0.75
L_1	—	1.0	—

© 2015 Renesas Electronics Corporation. All rights reserved.

Downloaded from Arrow.com.

JEITA Package Code	RENESAS Code	Previous Code	MASS (TYP.) [g]
P-LQFP100-14x20-0.65	PLQP0100JC-A	P100GF-65-GBN-1	0.92

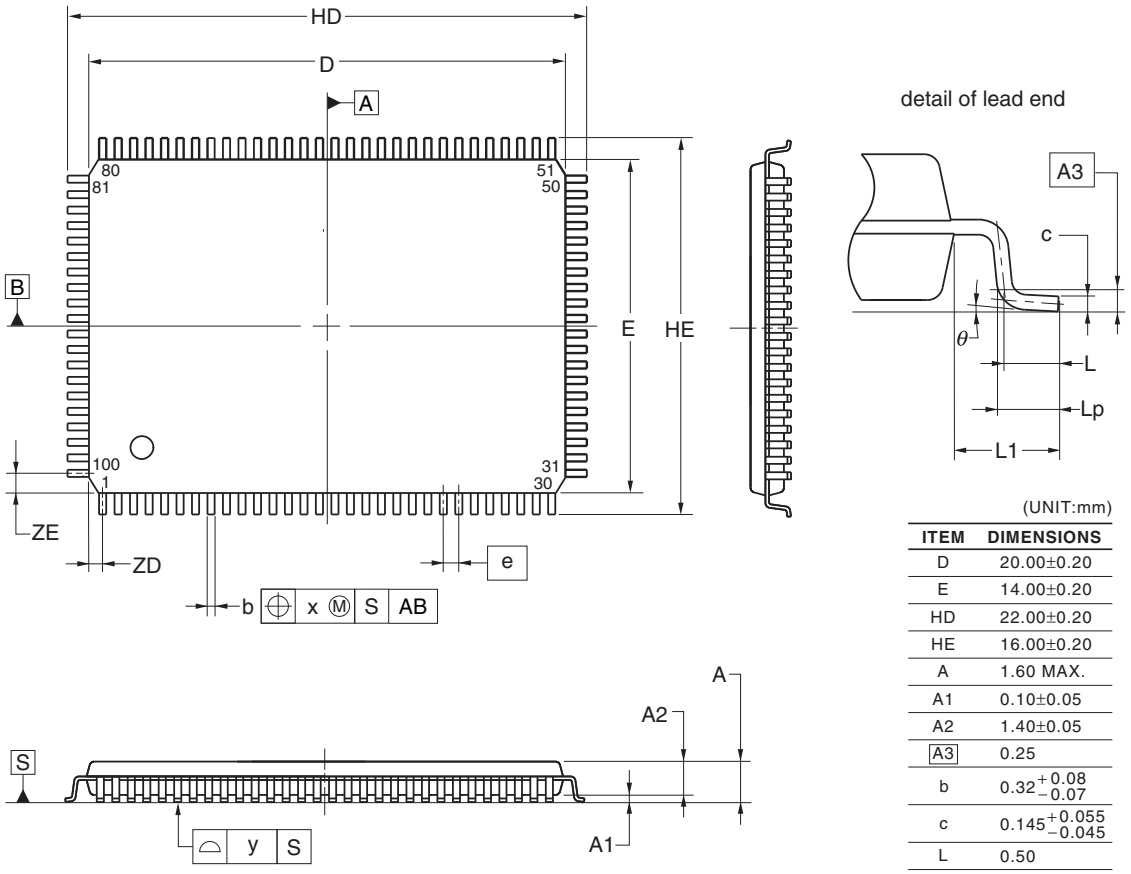

(UNIT:mm)

ITEM	DIMENSIONS
D	20.00±0.20
E	14.00±0.20
HD	22.00±0.20
HE	16.00±0.20
A	1.60 MAX.
A1	0.10±0.05
A2	1.40±0.05
A3	0.25
b	$0.32^{+0.08}_{-0.07}$
c	$0.145^{+0.055}_{-0.045}$
L	0.50
Lp	0.60±0.15
L1	1.00±0.20
θ	$3^{\circ}{}^{+5^{\circ}}_{-3^{\circ}}$
e	0.65
x	0.13
y	0.10
ZD	0.575
ZE	0.825

©2012 Renesas Electronics Corporation. All rights reserved.

Downloaded from Arrow.com.

3.11 128-pin Products

JEITA Package Code	RENESAS Code	Previous Code	MASS (TYP.) [g]
P-LFQFP128-14x20-0.50	PLQP0128KD-A	P128GF-50-GBP-1	0.92

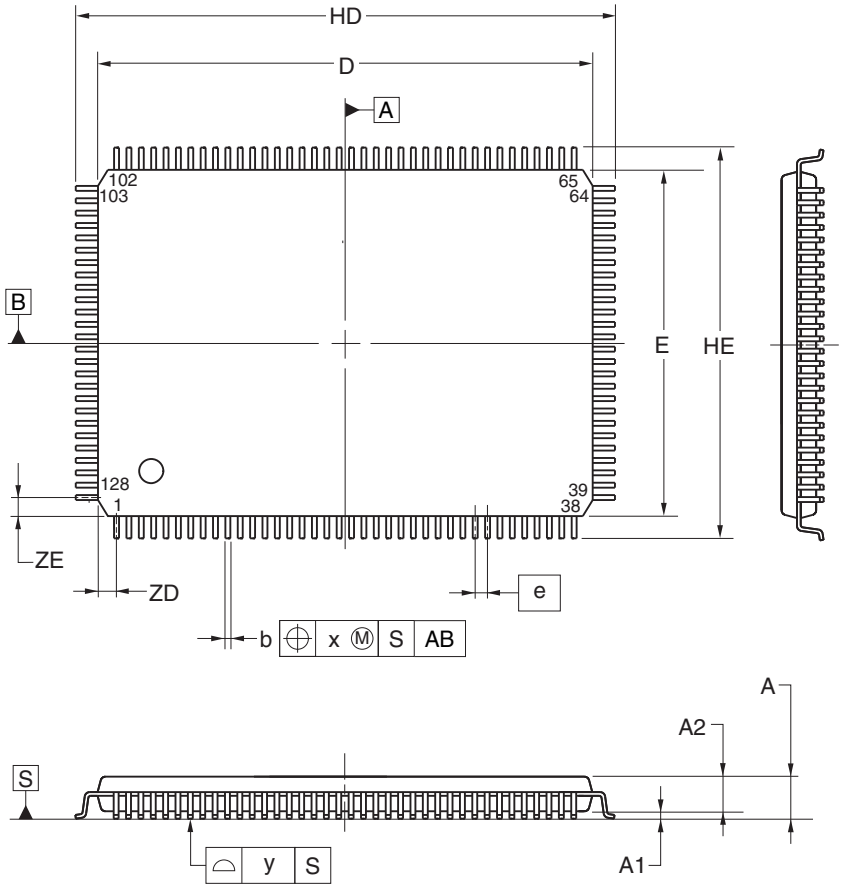

detail of lead end

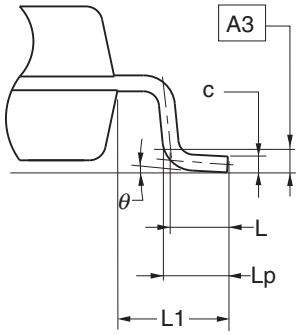

(UNIT:mm)

ITEM	DIMENSIONS
D	20.00±0.20
E	14.00±0.20
HD	22.00±0.20
HE	16.00±0.20
A	1.60 MAX.
A1	0.10±0.05
A2	1.40±0.05
A3	0.25
b	0.22±0.05
c	$0.145^{+0.055}_{-0.045}$
L	0.50
Lp	0.60±0.15
L1	1.00±0.20
θ	$3^{\circ}{}^{+5^{\circ}}_{-3^{\circ}}$
e	0.50
x	0.08
y	0.08
ZD	0.75
ZE	0.75

©2012 Renesas Electronics Corporation. All rights reserved.

Downloaded from Arrow.com.

Revision History	RL78/G23 Datasheet

Rev.	Date	Description	
		Page	Summary
1.00	Apr 13, 2021	—	First edition issued
1.10	Nov 18, 2021	All	The module name for 3-wire SPI was changed to simplified SPI.
		All	The module name for SPI was changed to simplified SPI.
		p.1	The operating current in the title was modified.
		p.1	1.1 Features: The descriptions of Middle-speed on-chip oscillator were modified.
		p.2	1.1 Features: The descriptions of Timers were modified.
		p.4	Figure 1 - 1 Part Number, Memory Size, and Package of RL78/G23 was modified.
		p.11	1.3.4 40-pin products: Figure was modified.
		p.12	1.3.5 44-pin products: Figure was modified.
		p.13	1.3.6 48-pin products: Note 2 was modified.
		p.13	1.3.6 48-pin products: Remark 3 was added.
		p.23	1.5 Block Diagram was modified.
		p.24 to p.26	1.6 Outline of Functions [30-, 32-, 36-, 40-, 44-, and 48-pin products]: The descriptions were modified.
		p.27 to p.29	1.6 Outline of Functions [52-, 64-, 80-, 100-, and 128-pin products]: The descriptions were modified.
		p.31	2.1 Absolute Maximum Ratings: Note was modified.
		p.32	2.2.1 Characteristics of the X1 and XT1 oscillators: Condition was modified.
		p.35	2.3.1 Pin characteristics: Notes 4 to 6 were modified.
		p.36, p.37	2.3.1 Pin characteristics: Notes 3, 5, and 6 were modified.
		p.43 to p.49	2.3.2 Supply current characteristics, (1) 30- to 64-pin package products with 96- to 128-Kbyte flash ROM: The descriptions in the tables were modified.
		p.50 to p.56	2.3.2 Supply current characteristics, (2) 30- to 64-pin package products with 192- to 256-Kbyte flash ROM and 80-pin package product with 128- to 256-Kbyte flash ROM was added.
		p.57 to p.63	2.3.2 Supply current characteristics, (3) 44- to 80-pin package products with 384- to 768-Kbyte flash ROM and 100- to 128-pin package products was added.
		p.64 to p.66	2.3.2 Supply current characteristics, (4) Peripheral Functions (Common to all products): The descriptions in the tables were added. Notes 13, 14, and 16 were modified. Note 19 was modified.
		p.102	2.5.2 Serial interface UARTA: The table was modified.
		p.106	2.6.1 A/D converter characteristics, (1) Normal modes 1 and 2: The descriptions in the table were modified.
		p.108	2.6.1 A/D converter characteristics, (2) Low-voltage modes 1 and 2: The descriptions in the table were modified.
		P.110	2.6.1 A/D converter characteristics, (3) When the internal reference voltage is selected as reference voltage (+): The descriptions in the table were modified.
		p.111	2.6.4 Comparator characteristics: The descriptions in the table were modified.
		p.114	2.6.6 LVD circuit characteristics, (2) LVD1 Detection Voltage of Reset Mode and Interrupt Mode: The table was modified.
		p.117	2.8 Flash Memory Programming Characteristics, (2) Data flash memory: The descriptions in the table were modified.
		p.123	3.4 40-Pin Products: The figure was added.
		p.126	3.6 48-Pin Products: The figure was added.

Downloaded from Arrow.com.

Rev.	Date	Description	
		Page	Summary
1.20	Oct 12, 2022	p.5, p.6	Table 1 - 1 List of Ordering Part Numbers was modified.
		p.9, p.10	Table 1 - 2 Multiplexed Pin Functions of the 30-pin Products was added.
		p.12, p.13	Table 1 - 3 Multiplexed Pin Functions of the 32-pin Products was added.
		p.15, p.16	Table 1 - 4 Multiplexed Pin Functions of the 36-pin Products was added.
		p.18, p.19	Table 1 - 5 Multiplexed Pin Functions of the 40-pin Products was added.
		p.21, p.22	Table 1 - 6 Multiplexed Pin Functions of the 44-pin Products was added.
		p.24, p.25	Table 1 - 7 Multiplexed Pin Functions of the 48-pin Products was added.
		p.27, p.28	Table 1 - 8 Multiplexed Pin Functions of the 52-pin Products was added.
		p.30 to p.32	Table 1 - 9 Multiplexed Pin Functions of the 64-pin Products was added.
		p.35 to p.37	Table 1 - 10 Multiplexed Pin Functions 2 of the 64-pin Products was added.
		p.39 to p.41	Table 1 - 11 Multiplexed Pin Functions of the 80-pin Products was added.
		p.43 to p.46	Table 1 - 12 Multiplexed Pin Functions of the 100-pin Products was added.
		p.48 to p.51	Table 1 - 13 Multiplexed Pin Functions 2 of the 100-pin Products was added.
		p.53 to p.57	Table 1 - 14 Multiplexed Pin Functions of the 128-pin Products was added.
		P.62	1.6 Outline of Functions [30-, 32-, 36-, 40-, 44-, and 48-pin products] was modified.
		P.65	1.6 Outline of Functions [52-, 64-, 80-, 100-, and 128-pin products] was modified.
		P.66	2 The section title was modified, and the description and Cautions 1 to 4 were added to the beginning of the section.
		p.67, p.68	2.1 Absolute Maximum Ratings was modified.
		p.69	2.2.1 Characteristics of the X1 oscillator was modified.
		p.69	2.2.2 Characteristics of the XT1 oscillator was added.
		p.72, p.75 to p.77, p.79	2.3.1 Pin characteristics, Note, and Cautions were modified.
		p.85	2.3.2 Supply current characteristics: 1. Notes 3 to 5 were modified.
		p.91	2.3.2 Supply current characteristics: 2. Notes 3 to 5 were modified.
		p.97	2.3.2 Supply current characteristics: 3. Notes 3 to 5 were modified.
		p.98 to p.100	2.3.2 Supply current characteristics: 4. Peripheral Functions (Common to all products) was modified, and Note 20 was added.
		p.101	2.4 AC Characteristics was modified.
		p.142, p.143	2.6.1 A/D converter characteristics: 2. Low-voltage modes 1 and 2 was modified, and Note 7 was added.
		p.156	3.3 36-pin Products was modified.
		p.164	3.8 64-pin Products was modified.
1.21	Nov 15, 2022	p.5	Table 1 - 1 List of Ordering Part Numbers was modified.
1.30	Jan 31, 2024	p.4	Figure 1 - 1 Part Number, Memory Size, and Package of RL78/G23 was modified.
		p.5 to p.7	Table 1 - 1 List of Ordering Part Numbers was modified.
		p.80	2.3.2 Supply current characteristics, 1. 30- to 64-pin package products with 96- to 128-Kbyte flash ROM (1/4): Note 1 was modified.
		p.82	2.3.2 Supply current characteristics, 1. 30- to 64-pin package products with 96- to 128-Kbyte flash ROM (2/4): Notes 1 to 3 were modified.
		p.83	2.3.2 Supply current characteristics, 1. 30- to 64-pin package products with 96- to 128-Kbyte flash ROM (3/4): Note 1 was modified.
		p.86	2.3.2 Supply current characteristics, 1. 30- to 64-pin package products with 96- to 128-Kbyte flash ROM (4/4): Notes 1 and 3 to 8 were modified.

Downloaded from Arrow.com.

Rev.	Date	Description	
		Page	Summary
1.30	Jan 31, 2024	p.87	2.3.2 Supply current characteristics, 2. 30- to 64-pin package products with 192- to 256-Kbyte flash ROM and 80-pin package product with 128- to 256-Kbyte flash ROM (1/4): Note 1 was modified.
		p.89	2.3.2 Supply current characteristics, 2. 30- to 64-pin package products with 192- to 256-Kbyte flash ROM and 80-pin package product with 128- to 256-Kbyte flash ROM (2/4): Notes 1 to 3 were modified.
		p.90	2.3.2 Supply current characteristics, 2. 30- to 64-pin package products with 192- to 256-Kbyte flash ROM and 80-pin package product with 128- to 256-Kbyte flash ROM (3/4): Note 1 was modified.
		p.93	2.3.2 Supply current characteristics, 2. 30- to 64-pin package products with 192- to 256-Kbyte flash ROM and 80-pin package product with 128- to 256-Kbyte flash ROM (4/4): Notes 1 and 3 to 8 were modified.
		p.94	2.3.2 Supply current characteristics, 3. 44- to 80-pin package products with 384- to 768-Kbyte flash ROM and 100- to 128-pin package products (1/4) and Note 1 was modified.
		p.96	2.3.2 Supply current characteristics, 3. 44- to 80-pin package products with 384- to 768-Kbyte flash ROM and 100- to 128-pin package products (2/4) and Notes 1 to 3 were modified.
		p.97	2.3.2 Supply current characteristics, 3. 44- to 80-pin package products with 384- to 768-Kbyte flash ROM and 100- to 128-pin package products (3/4) and Note 1 was modified.
		p.99, p.100	2.3.2 Supply current characteristics, 3. 44- to 80-pin package products with 384- to 768-Kbyte flash ROM and 100- to 128-pin package products (4/4), Notes 1, and 3 to 8 were modified.
		p.104	2.4 AC Characteristics was modified.
		p.148	2.6.4 Comparator characteristics: Note was added.
		p.159	3.2 32-pin Products: The figure was added.
		p.163	3.5 44-pin Products: The figure was added.
		p.165	3.6 48-pin Products: The figure was added.
		p.170	3.8 64-pin Products: The figure was added.
1.40	Oct 31, 2025	p.6	Table 1 - 1 List of Ordering Part Numbers (2/3) was modified.
		p.60	1.6 Outline of Functions: Table was modified.
		p.75	2.3.1 Pin characteristics: Table (3/7) was modified.
		p.80	2.3.2 Supply current characteristics 1. 30- to 64-pin package products with 96- to 128-Kbyte code flash memory Table (1/4): Note 1 was modified.
		p.83	2.3.2 Supply current characteristics 1. 30- to 64-pin package products with 96- to 128-Kbyte code flash memory Table (3/4): Note 1 was modified.
		p.87	2.3.2 Supply current characteristics 2. 30- to 64-pin package products with 192- to 256-Kbyte code flash memory and 80-pin package product with 128- to 256-Kbyte code flash memory Table (1/4): Note 1 was modified.
		p.90	2.3.2 Supply current characteristics 2. 30- to 64-pin package products with 192- to 256-Kbyte code flash memory and 80-pin package product with 128- to 256-Kbyte code flash memory Table (3/4): Note 1 was modified.
		p.94	2.3.2 Supply current characteristics 3. 44- to 80-pin package products with 384- to 768-Kbyte code flash memory and 100- to 128-pin package products Table (1/4): Note 1 was modified.
		p.97	2.3.2 Supply current characteristics 3. 44- to 80-pin package products with 384- to 768-Kbyte code flash memory and 100- to 128-pin package products Table (3/4): Note 1 was modified.

Downloaded from Arrow.com.

Rev.	Date	Description	
		Page	Summary
1.40	Oct 31, 2025	p.104	2.4 AC Characteristics: Table was modified.
		p.139	2.5.2 Serial interface UARTA: Caution was modified.
		p.144	2.6.1 A/D converter characteristics 1. Normal modes 1 and 2: Note 2 was modified.
		p.145	2.6.1 A/D converter characteristics 2. Low-voltage modes 1 and 2: Notes 1 and 3 were modified.
		p.174	3.9 80-pin Products: Figure was added.

SuperFlash is a registered trademark of Silicon Storage Technology, Inc. in several countries including the United States and Japan.

Caution: This product uses SuperFlash® technology licensed from Silicon Storage Technology, Inc.

All trademarks and registered trademarks are the property of their respective owners.

Downloaded from Arrow.com.

General Precautions in the Handling of Microprocessing Unit and Microcontroller Unit Products

The following usage notes are applicable to all Microprocessing unit and Microcontroller unit products from Renesas. For detailed usage notes on the products covered by this document, refer to the relevant sections of the document as well as any technical updates that have been issued for the products.

1. Precaution against Electrostatic Discharge (ESD)
   A strong electrical field, when exposed to a CMOS device, can cause destruction of the gate oxide and ultimately degrade the device operation. Steps must be taken to stop the generation of static electricity as much as possible, and quickly dissipate it when it occurs. Environmental control must be adequate. When it is dry, a humidifier should be used. This is recommended to avoid using insulators that can easily build up static electricity. Semiconductor devices must be stored and transported in an anti-static container, static shielding bag or conductive material. All test and measurement tools including work benches and floors must be grounded. The operator must also be grounded using a wrist strap. Semiconductor devices must not be touched with bare hands. Similar precautions must be taken for printed circuit boards with mounted semiconductor devices.
2. Processing at power-on
   The state of the product is undefined at the time when power is supplied. The states of internal circuits in the LSI are indeterminate and the states of register settings and pins are undefined at the time when power is supplied. In a finished product where the reset signal is applied to the external reset pin, the states of pins are not guaranteed from the time when power is supplied until the reset process is completed. In a similar way, the states of pins in a product that is reset by an on-chip power-on reset function are not guaranteed from the time when power is supplied until the power reaches the level at which resetting is specified.
3. Input of signal during power-off state
   Do not input signals or an I/O pull-up power supply while the device is powered off. The current injection that results from input of such a signal or I/O pull-up power supply may cause malfunction and the abnormal current that passes in the device at this time may cause degradation of internal elements. Follow the guideline for input signal during power-off state as described in your product documentation.
4. Handling of unused pins
   Handle unused pins in accordance with the directions given under handling of unused pins in the manual. The input pins of CMOS products are generally in the high-impedance state. In operation with an unused pin in the open-circuit state, extra electromagnetic noise is induced in the vicinity of the LSI, an associated shoot-through current flows internally, and malfunctions occur due to the false recognition of the pin state as an input signal become possible.
5. Clock signals
   After applying a reset, only release the reset line after the operating clock signal becomes stable. When switching the clock signal during program execution, wait until the target clock signal is stabilized. When the clock signal is generated with an external resonator or from an external oscillator during a reset, ensure that the reset line is only released after full stabilization of the clock signal. Additionally, when switching to a clock signal produced with an external resonator or by an external oscillator while program execution is in progress, wait until the target clock signal is stable.
6. Voltage application waveform at input pin
   Waveform distortion due to input noise or a reflected wave may cause malfunction. If the input of the CMOS device stays in the area between V_{IL} (Max.) and V_{IH} (Min.) due to noise, for example, the device may malfunction. Take care to prevent chattering noise from entering the device when the input level is fixed, and also in the transition period when the input level passes through the area between V_{IL} (Max.) and V_{IH} (Min.).
7. Prohibition of access to reserved addresses
   Access to reserved addresses is prohibited. The reserved addresses are provided for possible future expansion of functions. Do not access these addresses as the correct operation of the LSI is not guaranteed.
8. Differences between products
   Before changing from one product to another, for example to a product with a different part number, confirm that the change will not lead to problems. The characteristics of a microprocessing unit or microcontroller unit products in the same group but having a different part number might differ in terms of internal memory capacity, layout pattern, and other factors, which can affect the ranges of electrical characteristics, such as characteristic values, operating margins, immunity to noise, and amount of radiated noise. When changing to a product with a different part number, implement a system-evaluation test for the given product.

Downloaded from Arrow.com.

Notice

1. Descriptions of circuits, software and other related information in this document are provided only to illustrate the operation of semiconductor products and application examples. You are fully responsible for the incorporation or any other use of the circuits, software, and information in the design of your product or system. Renesas Electronics disclaims any and all liability for any losses and damages incurred by you or third parties arising from the use of these circuits, software, or information.
2. Renesas Electronics hereby expressly disclaims any warranties against and liability for infringement or any other claims involving patents, copyrights, or other intellectual property rights of third parties, by or arising from the use of Renesas Electronics products or technical information described in this document, including but not limited to, the product data, drawings, charts, programs, algorithms, and application examples.
3. No license, express, implied or otherwise, is granted hereby under any patents, copyrights or other intellectual property rights of Renesas Electronics or others.
4. You shall be responsible for determining what licenses are required from any third parties, and obtaining such licenses for the lawful import, export, manufacture, sales, utilization, distribution or other disposal of any products incorporating Renesas Electronics products, if required.
5. You shall not alter, modify, copy, or reverse engineer any Renesas Electronics product, whether in whole or in part. Renesas Electronics disclaims any and all liability for any losses or damages incurred by you or third parties arising from such alteration, modification, copying or reverse engineering.
6. Renesas Electronics products are classified according to the following two quality grades: “Standard” and “High Quality”. The intended applications for each Renesas Electronics product depends on the product’s quality grade, as indicated below.
   "Standard": Computers; office equipment; communications equipment; test and measurement equipment; audio and visual equipment; home electronic appliances; machine tools; personal electronic equipment; industrial robots; etc.
   "High Quality": Transportation equipment (automobiles, trains, ships, etc.); traffic control (traffic lights); large-scale communication equipment; key financial terminal systems; safety control equipment; etc.
   Unless expressly designated as a high reliability product or a product for harsh environments in a Renesas Electronics data sheet or other Renesas Electronics document, Renesas Electronics products are not intended or authorized for use in products or systems that may pose a direct threat to human life or bodily injury (artificial life support devices or systems; surgical implantations; etc.), or may cause serious property damage (space system; undersea repeaters; nuclear power control systems; aircraft control systems; key plant systems; military equipment; etc.). Renesas Electronics disclaims any and all liability for any damages or losses incurred by you or any third parties arising from the use of any Renesas Electronics product that is inconsistent with any Renesas Electronics data sheet, user’s manual or other Renesas Electronics document.
7. No semiconductor product is absolutely secure. Notwithstanding any security measures or features that may be implemented in Renesas Electronics hardware or software products, Renesas Electronics shall have absolutely no liability arising out of any vulnerability or security breach, including but not limited to any unauthorized access to or use of a Renesas Electronics product or a system that uses a Renesas Electronics product. RENESAS ELECTRONICS DOES NOT WARRANT OR GUARANTEE THAT RENESAS ELECTRONICS PRODUCTS, OR ANY SYSTEMS CREATED USING RENESAS ELECTRONICS PRODUCTS WILL BE INVULNERABLE OR FREE FROM CORRUPTION, ATTACK, VIRUSES, INTERFERENCE, HACKING, DATA LOSS OR THEFT, OR OTHER SECURITY INTRUSION (“Vulnerability Issues”). RENESAS ELECTRONICS DISCLAIMS ANY AND ALL RESPONSIBILITY OR LIABILITY ARISING FROM OR RELATED TO ANY VULNERABILITY ISSUES. FURTHERMORE, TO THE EXTENT PERMITTED BY APPLICABLE LAW, RENESAS ELECTRONICS DISCLAIMS ANY AND ALL WARRANTIES, EXPRESS OR IMPLIED, WITH RESPECT TO THIS DOCUMENT AND ANY RELATED OR ACCOMPANYING SOFTWARE OR HARDWARE, INCLUDING BUT NOT LIMITED TO THE IMPLIED WARRANTIES OF MERCHANTABILITY, OR FITNESS FOR A PARTICULAR PURPOSE.
8. When using Renesas Electronics products, refer to the latest product information (data sheets, user’s manuals, application notes, “General Notes for Handling and Using Semiconductor Devices” in the reliability handbook, etc.), and ensure that usage conditions are within the ranges specified by Renesas Electronics with respect to maximum ratings, operating power supply voltage range, heat dissipation characteristics, installation, etc. Renesas Electronics disclaims any and all liability for any malfunctions, failure or accident arising out of the use of Renesas Electronics products outside of such specified ranges.
9. Although Renesas Electronics endeavors to improve the quality and reliability of Renesas Electronics products, semiconductor products have specific characteristics, such as the occurrence of failure at a certain rate and malfunctions under certain use conditions. Unless designated as a high reliability product or a product for harsh environments in a Renesas Electronics data sheet or other Renesas Electronics document, Renesas Electronics products are not subject to radiation resistance design. You are responsible for implementing safety measures to guard against the possibility of bodily injury, injury or damage caused by fire, and/or danger to the public in the event of a failure or malfunction of Renesas Electronics products, such as safety design for hardware and software, including but not limited to redundancy, fire control and malfunction prevention, appropriate treatment for aging degradation or any other appropriate measures. Because the evaluation of microcomputer software alone is very difficult and impractical, you are responsible for evaluating the safety of the final products or systems manufactured by you.
10. Please contact a Renesas Electronics sales office for details as to environmental matters such as the environmental compatibility of each Renesas Electronics product. You are responsible for carefully and sufficiently investigating applicable laws and regulations that regulate the inclusion or use of controlled substances, including without limitation, the EU RoHS Directive, and using Renesas Electronics products in compliance with all these applicable laws and regulations. Renesas Electronics disclaims any and all liability for damages or losses occurring as a result of your noncompliance with applicable laws and regulations.
11. Renesas Electronics products and technologies shall not be used for or incorporated into any products or systems whose manufacture, use, or sale is prohibited under any applicable domestic or foreign laws or regulations. You shall comply with any applicable export control laws and regulations promulgated and administered by the governments of any countries asserting jurisdiction over the parties or transactions.
12. It is the responsibility of the buyer or distributor of Renesas Electronics products, or any other party who distributes, disposes of, or otherwise sells or transfers the product to a third party, to notify such third party in advance of the contents and conditions set forth in this document.
13. This document shall not be reprinted, reproduced or duplicated in any form, in whole or in part, without prior written consent of Renesas Electronics.
14. Please contact a Renesas Electronics sales office if you have any questions regarding the information contained in this document or Renesas Electronics products.

(Note1) “Renesas Electronics” as used in this document means Renesas Electronics Corporation and also includes its directly or indirectly controlled subsidiaries.
(Note2) “Renesas Electronics product(s)” means any product developed or manufactured by or for Renesas Electronics.

(Rev.5.0-1 October 2020)

Corporate Headquarters

TOYOSU FORESIA, 3-2-24 Toyosu,
Koto-ku, Tokyo 135-0061, Japan
www.renesas.com

Contact Information

For further information on a product, technology, the most up-to-date version of a document, or your nearest sales office, please visit:
www.renesas.com/contact/

Trademarks

Renesas and the Renesas logo are trademarks of Renesas Electronics Corporation. All trademarks and registered trademarks are the property of their respective owners.

© 2025 Renesas Electronics Corporation. All rights reserved.

Downloaded from Arrow.com.